AUTHENTICATED
U.S. GOVERNMENT
INFORMATION
GPO

(1) The manufacturer is not complying with the terms of the approval or the requirements of this section;

(2) The approval was not issued in conformance with the requirements of § 3282.603;

(3) A home produced under the approval fails to comply with the Federal construction and safety standards or contains an imminent safety hazard; or

(4) The manufacturer fails to make arrangements for one or more manufactured homes to be inspected by the IPIA prior to occupancy.

(b) The DAPIA must immediately notify the manufacturer, the IPIA, and HUD of any revocation or amendment of DAPIA approval.

§ 3282.610 Failure to comply with the procedures of this subpart.

In addition to other sanctions available under the Act and this part, HUD may prohibit any manufacturer or PIA found to be in violation of the requirements of this section from carrying out their functions of this Subpart in the future, after providing an opportunity for an informal presentation of views in accordance with § 3282.152(f). Repeated infractions of the requirements of this section may be grounds for the suspension or disqualification of a PIA under §§ 3282.355 and 3282.356.

§ 3282.611 Compliance with this subpart.

If the manufacturer and IPIA, as applicable, complies with the requirements of this section and the home complies with the construction and safety standards for those aspects of construction covered by the DAPIA approval, then HUD will consider a manufacturer or retailer that has permitted a manufactured home approved for on-site completion under this section to be sold, leased, offered for sale or lease, introduced, delivered, or imported to be in compliance with the certification requirements of the Act and the applicable implementing regulations in this part 3282 for those aspects of construction covered by the approval.

PART 3284—MANUFACTURED HOUSING PROGRAM FEE

Sec.
3284.1 Applicability.
3284.5 Amount of fee.
3284.10 Payments to States.

AUTHORITY: 42 U.S.C. 3535(d), 5419 and 5424.

SOURCE: 67 FR 52835, Aug. 13, 2002, unless otherwise noted.

§ 3284.1 Applicability.

This part applies to manufacturers that are subject to the requirements of the National Manufactured Housing Construction and Safety Standards Act of 1974 (the Act), and to States having State plans approved in accordance with the Act. The amounts established under this part for any fee collected from manufacturers will be used, to the extent approved in advance in an annual appropriations Act, to offset the expenses incurred by HUD in connection with the manufactured housing program authorized by the Act.

§ 3284.5 Amount of fee.

Each manufacturer, as defined in § 3282.7 of this chapter, must pay a fee of $100 per transportable section of each manufactured housing unit that it manufactures under the requirements of part 3280 of this chapter.

[79 FR 47377, Aug. 13, 2014]

§ 3284.10 Payments to States.

Each calendar year HUD will pay each State that, on December 27, 2000, had a State plan approved pursuant to subpart G of part 3282 of this chapter a total amount that is not less than the amount paid to that State for the 12 months ending at the close of business on December 26, 2000.

PART 3285—MODEL MANUFACTURED HOME INSTALLATION STANDARDS

Subpart A—General

Sec.
3285.1 Administration.
3285.2 Manufacturer installation instructions.
3285.3 Alterations during initial installation.
3285.4 Incorporation by reference (IBR).

3285.5 Definitions.
3285.6 Final leveling of manufactured home.

Subpart B—Pre-Installation Considerations

3285.101 Fire separation.
3285.102 Installation of manufactured homes in flood hazard areas.
3285.103 Site suitability with design zone maps.
3285.104 Moving manufactured home to location.
3285.105 Permits, other alterations, and on-site structures.

Subpart C—Site Preparation

3285.201 Soil conditions.
3285.202 Soil classifications and bearing capacity.
3285.203 Site drainage.
3285.204 Ground moisture control.

Subpart D—Foundations

3285.301 General.
3285.302 Flood hazard areas.
3285.303 Piers.
3285.304 Pier configuration.
3285.305 Clearance under homes.
3285.306 Design procedures for concrete block piers.
3285.307 Perimeter support piers.
3285.308 Manufactured piers.
3285.309 [Reserved]
3285.310 Pier location and spacing.
3285.311 Required perimeter supports.
3285.312 Footings.
3285.313 Combination systems.
3285.314 [Reserved]
3285.315 Special snow load conditions.

Subpart E—Anchorage Against Wind

3285.401 Anchoring instructions.
3285.402 Ground anchor installations.
3285.403 Sidewall, over-the-roof, mate-line, and shear wall straps.
3285.404 Severe climatic conditions.
3285.405 Severe wind zones.
3285.406 Flood hazard areas.

Subpart F—Optional Features

3285.501 Home installation manual supplements.
3285.502 Expanding rooms.
3285.503 Optional appliances.
3285.504 Skirting.
3285.505 Crawlspace ventilation.

Subpart G—Ductwork and Plumbing and Fuel Supply Systems

3285.601 Field assembly.
3285.602 Utility connections.
3285.603 Water supply.
3285.604 Drainage system.
3285.605 Fuel supply system.
3285.606 Ductwork connections.

Subpart H—Electrical Systems and Equipment

3285.701 Electrical crossovers.
3285.702 Miscellaneous lights and fixtures.
3285.703 Smoke alarms.
3285.704 Telephone and cable TV.

Subpart I—Exterior and Interior Close-Up

3285.801 Exterior close-up.
3285.802 Structural interconnection of multi-section homes.
3285.803 Interior close-up.
3285.804 Bottom board repair.

Subpart J—Optional Information for Manufacturer's Installation Instructions

3285.901 General.
3285.902 Moving manufactured home to location.
3285.903 Permits, alterations, and on-site structures.
3285.904 Utility systems connection.
3285.905 Heating oil systems.
3285.906 Telephone and cable TV.
3285.907 Manufacturer additions to installation instructions.

AUTHORITY: 42 U.S.C. 3535(d), 5403, 5404, and 5424.

SOURCE: 72 FR 59362, Oct. 19, 2007, unless otherwise noted.

Subpart A—General

§ 3285.1 Administration.

(a) *Scope.* These Model Installation Standards provide minimum requirements for the initial installation of new manufactured homes, in accordance with section 605 of the Act (42 U.S.C. 5404). The Model Installation Standards are one component of the Manufactured Home Installation Program in Part 3286 of this chapter, upon effect, and serve as the basis for developing the manufacturers' installation instructions required by § 3285.2 of this subpart. The manufacturer's installation instructions, including specific methods for performing a specific operation or assembly, will be deemed to comply with these Model Installation Standards, provided they meet or exceed the minimum requirements of these Model Installation Standards and do not take the home out of compliance with the Manufactured Home Construction and Safety Standards (24

CFR part 3280). Work necessary to join all sections of a multi-section home specifically identified in Subparts G, H, and I of this part, or work associated with connecting exterior lights, chain-hung light fixtures, or ceiling-suspended fans, as specifically identified in Subpart I, is not considered assembly or construction of the home, although the design of those elements of a manufactured home must comply with the Manufactured Home Construction and Safety Standards (MHCSS). However, work associated with the completion of hinged roofs and eaves in § 3285.801 and other work done on-site and not specifically identified in this part as close-up is considered construction and assembly and is subject to the requirements of the Manufactured Home Construction and Safety Standards (24 CFR part 3280) and the Manufactured Home Procedural and Enforcement Regulations (24 CFR part 3282).

(1) States that choose to operate an installation program for manufactured homes in lieu of the federal program must implement installation standards that provide protection to its residents that equals or exceeds the protection provided by these Model Installation Standards.

(2) In states that do not choose to operate their own installation program for manufactured homes, these Model Installation Standards serve as the minimum standards for manufactured home installations.

(b) *Applicability*. The standards set forth herein have been established to accomplish certain basic objectives and are not to be construed as relieving manufacturers, retailers, installers, or other parties of responsibility for compliance with other applicable ordinances, codes, regulations, and laws. The manufactured homes covered by this standard must comply with requirements of the U.S. Department of Housing and Urban Development's (HUD) MHCSS Program, as set forth in 24 CFR part 3280, Manufactured Home Construction and Safety Standards, and 24 CFR part 3282, Manufactured Home Procedural and Enforcement Regulations, as well as with, upon effect, the Manufactured Home Installation Program, 24 CFR part 3286, and the Dispute Resolution Program, 24 CFR part 3288. The requirements of this part do not apply to homes installed on site-built permanent foundations when the manufacturer certifies the home in accordance with § 3282.12 of this chapter.

(c) *Consultation with the Manufactured Housing Consensus Committee*. The Secretary will seek input from the Manufactured Housing Consensus Committee (MHCC) when revising the installation standards in this part 3285. Before publication of a proposed rule to revise the installation standards, the Secretary will provide the MHCC with a 120-day opportunity to comment on such revision. The MHCC may send to the Secretary any of the MHCC's own recommendations to adopt new installation standards or to modify or repeal any of the installation standards in this part. Along with each recommendation, the MHCC must set forth pertinent data and arguments in support of the action sought. The Secretary will either:

(1) Accept or modify the recommendation and publish it for public comment in accordance with section 553 of the Administrative Procedure Act (5 U.S.C. 553), along with an explanation of the reasons for any such modification; or

(2) Reject the recommendation entirely, and provide to the MHCC a written explanation of the reasons for the rejection.

§ 3285.2 Manufacturer installation instructions.

(a) *Instructions required*. A manufacturer must provide with each new manufactured home, installation designs and instructions that have been approved by the Secretary or DAPIA. The approved installation instructions must include all topics covered in the Model Installation Standards for the installation of manufactured homes. These installation instructions and any variations thereto that are prepared to comply with paragraph (c) of this section must provide protection to residents of the manufactured homes that equals or exceeds the protection provided by these Model Installation Standards and must not take the manufactured home out of compliance with the MHCSS. These instructions must

insure that each home will be supported and anchored in a manner that is capable of meeting or exceeding the design loads required by the MHCSS.

(b) *Professional engineer or registered architect certification.* A professional engineer or registered architect must prepare and certify that the manufacturer's installation instructions meet or exceed the Model Installation Standards for foundation support and anchoring whenever:

(1) The manufacturer's installation instructions do not conform in their entirety to the minimum requirements or tables or their conditions for foundation support and anchoring of this Standard; or

(2) An alternative foundation system or anchoring system is employed, including designs for basements and perimeter support foundation systems, whether or not it is included in the installation instructions; or

(3) Materials such as metal piers or alternatives to concrete footing materials are required by the installation instructions; or

(4) Foundation support and anchoring systems are designed for use in areas subject to freezing or for use in areas subject to flood damage or high seismic risk; or

(5) Foundations support and anchoring systems are designed to be used in special snow load conditions or in severe wind design areas; or

(6) Site conditions do not allow the use of the manufacturer's installation instructions; or

(7) There are any other circumstances in which the manufacturer's installation instructions would not permit the home to be installed in conformance with the Installation Standards or the MHCSS.

(c) *Variations to installation instructions.* (1) Before an installer provides support or anchorage that are different than those methods specified in the manufacturer's installation instructions, or when the installer encounters site or other conditions (such as areas that are subject to flood damage or high seismic risk) that prevent the use of the instructions, the installer must:

(i) First attempt to obtain DAPIA-approved designs and instructions prepared by the manufacturer; or

(ii) If designs and instructions are not available from the manufacturer, obtain an alternate design prepared and certified by a registered professional engineer or registered architect for the support and anchorage of the manufactured home that is consistent with the manufactured home design, conforms to the requirements of the MHCSS, and has been approved by the manufacturer and the DAPIA.

(2) The manufacturer's installation instructions must include an explanation of the requirement in paragraph (c)(1) of this section.

(d) *Installer certification.* In making the certification of the installation required under part 3286 of this chapter, upon effect, an installer must certify that it completed the installation in compliance with either the manufacturer's instructions or with an alternate installation design and instructions that have been prepared by the manufacturer or prepared in compliance with paragraph (c) of this section.

(e) *Temporary storage.* The installation instructions must provide at least one method for temporarily supporting each transportable section of a manufactured home, to prevent structural and other damage to the structure, when those section(s) are temporarily sited at the manufacturer's facility, retailer's lot, or the home site.

§ 3285.3 Alterations during initial installation.

Additions, modifications, or replacement or removal of any equipment that affects the installation of the home made by the manufacturer, retailer, or installer prior to completion of the installation by an installer must equal or exceed the protections and requirements of these Model Installation Standards, the MHCSS (24 CFR part 3280) and the Manufactured Home Procedural and Enforcement Regulations (24 CFR part 3282). An alteration, as defined in § 3282.7 of this chapter, must not affect the ability of the basic manufactured home to comply with the MHCSS, and the alteration must not impose additional loads to the manufactured home or its foundation, unless the alteration is included in the manufacturer's DAPIA-approved designs and installation instructions, or is designed

by a registered professional engineer or architect consistent with the manufacturer's design and that conforms to the requirements of the MHCSS.

§ 3285.4 Incorporation by reference (IBR).

(a) The materials listed in this section are incorporated by reference in the corresponding sections noted. These incorporations by reference were approved by the Director of the Federal Register, in accordance with 5 U.S.C. 552(a) and 1 CFR part 51. The materials are available for purchase at the corresponding addresses noted below, and all are available for inspection at the Office of Manufactured Housing Programs, U.S. Department of Housing and Urban Development, 451 Seventh Street, SW., Room 9164, Washington, DC 20410; or the National Archives and Records Administration (NARA). For information on the availability of this material at NARA, call (202) 741–6030, or go to: *http://www.archives.gov/federal-register/cfr/ibr-locations.html*.

(b) The materials listed below are available for purchase from the Air Conditioning Contractors of America (ACCA), 2800 Shirlington Road, Suite 300, Arlington, Virginia 22206.

(1) ACCA Manual J, Residential Load Calculation, 8th Edition, IBR approved for § 3285.503(a)(1)(i)(A).

(2) [Reserved]

(c) The materials listed below are available for purchase from APA—The Engineered Wood Association, 7011 South 19th Street, Tacoma, Washington 98411, telephone number (253) 565–6600, fax number (253) 565–7265.

(1) PS1–95, Construction and Industrial Plywood (with typical APA trademarks), 1995 edition, IBR approved for § 3285.312(a)(2)(i).

(2) [Reserved]

(d) The materials listed below are available for purchase from American Society of Heating, Refrigerating and Air Conditioning Engineers (ASHRAE), 1791 Tullie Circle, NE., Atlanta, Georgia 30329–2305.

(1) ASHRAE Handbook of Fundamentals, 1997 Inch-Pound Edition, IBR approved for § 3285.503(a)(1)(i)(A).

(2) [Reserved]

(e) The materials listed below are available for purchase from American Society for Testing and Materials (ASTM), 100 Barr Harbor Drive, West Conshohocken, Pennsylvania 19428–2959.

(1) ASTM C 90–02a, Standard Specification for Loadbearing Concrete Masonry Units, 2002, IBR approved for § 3285.312(a)(1)(i).

(2) ASTM D 1586–99, Standard Test Method for Penetration Test and Split-Barrel Sampling of Soils, 1999, IBR approved for the table at § 3285.202(c).

(3) ASTM D 2487–00, Standard Practice for Classification of Soils for Engineering Purposes (Unified Soil Classification System), 2000, IBR approved for the table at § 3285.202(c).

(4) ASTM D 2488–00, Standard Practice for Description and Identification of Soils (Visual-Manual Procedure), 2000, IBR approved for the table at § 3285.202(c).

(5) ASTM D 3953–97, Standard Specification for Strapping, Flat Steel and Seals, 1997, IBR approved for § 3285.402(b)(2) and Note 10 to Table 1 to § 3285.402.

(f) The materials listed below are available for purchase from American Wood-Preservers' Association (AWPA), P.O. Box 388, Selma, Alabama 36702.

(1) AWPA M4–02, Standard for the Care of Preservative-Treated Wood Products, 2002, IBR approved for § 3285.312(a)(2)(iii).

(2) AWPA U1–04, Use Category System; User Specification for Treated Wood, 2004, IBR approved for §§ 3285.303(b)(1), 3285.312(a)(2)(ii), and 3285.504(c).

(g) The materials listed below are available for purchase from the Federal Emergency Management Administration (FEMA), 500 C Street, SW., Washington, DC 20472.

(1) FEMA 85/September 1985, Manufactured Home Installation in Flood Hazard Areas, 1985, IBR approved for § 3285.102(d)(3).

(2) [Reserved]

(h) The materials listed below are available for purchase from the National Fire Protection Association (NFPA), 1 Batterymarch Park, Quincy, Massachusetts 02169–7471.

(1) NFPA 31, Standard for the Installation of Oil Burning Equipment, 2001 edition, IBR approved for §§ 3285.905(a) and 3285.905(d)(3).

(2) NFPA 70, National Electrical Code, 2005 edition, IBR approved for §§ 3285.702(e)(1) and 3285.906.

(3) NFPA 501A, Standard for Fire Safety Criteria for Manufactured Home Installations, Sites, and Communities, 2003 edition, IBR approved for § 3285.101.

(i) The materials listed below are available for purchase from the Structural Engineering Institute/American Society of Civil Engineers (SEI/ASCE), 1801 Alexander Bell Drive, Reston, Virginia 20191.

(1) SEI/ASCE 32–01, Design and Construction of Frost-Protected Shallow Foundations, 2001, IBR approved for §§ 3285.312(b)(2)(ii) and 3285.312(b)(3)(ii).

(2) [Reserved]

(j) The materials listed below are available for purchase from Underwriters Laboratories (UL), 333 Pfingsten Road, Northbrook, Illinois 60062.

(1) UL 181A, Closure Systems for Use With Rigid Air Ducts and Air Connectors, 1994, with 1998 revisions, IBR approved for § 3285.606(a).

(2) UL 181B, Closure Systems for Use With Flexible Air Ducts and Air Connectors, 1995, with 1998 revisions, IBR approved for § 3285.606(a).

§ 3285.5 Definitions.

The definitions contained in this section apply to the terms used in these Model Installation Standards. Where terms are not included, common usage of the terms applies. The definitions are as follows:

Act. The National Manufactured Housing Construction and Safety Standards Act of 1974, 42 U.S.C. 5401–5426.

Anchor assembly. Any device or other means designed to transfer home anchoring loads to the ground.

Anchoring equipment. Ties, straps, cables, turnbuckles, chains, and other approved components, including tensioning devices that are used to secure a manufactured home to anchor assemblies.

Anchoring system. A combination of anchoring equipment and anchor assemblies that will, when properly designed and installed, resist the uplift, overturning, and lateral forces on the manufactured home and on its support and foundation system.

Approved. When used in connection with any material, appliance or construction, means complying with the requirements of the Department of Housing and Urban Development.

Arid region. An area subject to 15 inches or less of annual rainfall.

Base flood. The flood having a one percent chance of being equaled or exceeded in any given year.

Base flood elevation (BFE). The elevation of the base flood, including wave height, relative to the datum specified on a LAHJ's flood hazard map.

Comfort cooling certificate. A certificate permanently affixed to an interior surface of the home specifying the factory design and preparations for air conditioning the manufactured home.

Crossovers. Utility interconnections in multi-section homes that are located where the sections are joined. Crossover connections include heating and cooling ducts, electrical circuits, water pipes, drain plumbing, and gas lines.

Design Approval Primary Inspection Agency (DAPIA). A state or private organization that has been accepted by the Secretary in accordance with the requirements of Part 3282, Subpart H of this chapter, which evaluates and approves or disapproves manufactured home designs and quality control procedures.

Diagonal tie. A tie intended to resist horizontal or shear forces, but which may resist vertical, uplift, and overturning forces.

Flood hazard area. The greater of either: The special flood hazard area shown on the flood insurance rate map; or the area subject to flooding during the design flood and shown on a LAHJ's flood hazard map, or otherwise legally designated.

Flood hazard map. A map delineating the flood hazard area and adopted by a LAHJ.

Footing. That portion of the support system that transmits loads directly to the soil.

Foundation system. A system of support that is capable of transferring all design loads to the ground, including elements of the support system, as defined in this section, or a site-built permanent foundation that meets the requirements of 24 CFR 3282.12.

Ground anchor. A specific anchoring assembly device designed to transfer home anchoring loads to the ground.

Installation instructions. DAPIA-approved instructions provided by the home manufacturer that accompany each new manufactured home and detail the home manufacturer requirements for support and anchoring systems, and other work completed at the installation site to comply with these Model Installation Standards and the Manufactured Home Construction and Safety Standards in 24 CFR part 3280.

Installation standards. Reasonable specifications for the installation of a new manufactured home, at the place of occupancy, to ensure proper siting; the joining of all sections of the home; and the installation of stabilization, support, or anchoring systems.

Labeled. A label, symbol, or other identifying mark of a nationally recognized testing laboratory, inspection agency, or other organization concerned with product evaluation that maintains periodic inspection of production of labeled equipment or materials, and by whose labeling is indicated compliance with nationally recognized standards or tests to determine suitable usage in a specified manner.

Listed or certified. Included in a list published by a nationally recognized testing laboratory, inspection agency, or other organization concerned with product evaluation that maintains periodic inspection of production of listed equipment or materials, and whose listing states either that the equipment or material meets nationally recognized standards or has been tested and found suitable for use in a specified manner.

Local authority having jurisdiction (LAHJ). The state, city, county, city and county, municipality, utility, or organization that has local responsibilities and requirements that must be complied with during the installation of a manufactured home.

Lowest floor. The floor of the lowest enclosed area of a manufactured home. An unfinished or flood-resistant enclosure, used solely for vehicle parking, home access, or limited storage, must not be considered the lowest floor, provided the enclosed area is not constructed so as to render the home in violation of the flood-related provisions of this standard.

Manufactured home. A structure, transportable in one or more sections, which in the traveling mode is 8 body feet or more in width or 40 body feet or more in length, or which when erected on site is 320 or more square feet, and which is built on a permanent chassis and designed to be used as a dwelling with or without a permanent foundation when connected to the required utilities, and includes the plumbing, heating, air-conditioning, and electrical systems contained in the structure. This term includes all structures that meet the above requirements, except the size requirements and with respect to which the manufacturer voluntarily files a certification, pursuant to § 3282.13 of this chapter, and complies with the MHCSS set forth in part 3280 of this chapter. The term does not include any self-propelled recreational vehicle. Calculations used to determine the number of square feet in a structure will include the total of square feet for each transportable section comprising the completed structure and will be based on the structure's exterior dimensions measured at the largest horizontal projections when erected on-site. These dimensions will include all expandable rooms, cabinets, and other projections containing interior space, but do not include bay windows. Nothing in this definition should be interpreted to mean that a manufactured home necessarily meets the requirements of HUD's Minimum Property Standards (HUD Handbook 4900.1) or that it is automatically eligible for financing under 12 U.S.C. 1709(b) certification.

Manufactured Home Construction and Safety Standards or MHCSS. The Manufactured Home Construction and Safety Standards established in part 3280 of this chapter, pursuant to section 604 of the Act, 42 U.S.C. 5403.

Manufactured home gas supply connector. A listed connector designed for connecting the manufactured home to the gas supply source.

Manufactured home site. A designated parcel of land designed for the installation of one manufactured home for the exclusive use of the occupants of the home.

Manufactured Housing Consensus Committee or MHCC. The consensus committee established pursuant to section 604(a)(3) of the Act, 42 U.S.C. 5403(a)(3).

Model Installation Standards. The installation standards established in part 3285 of this chapter, pursuant to section 605 of the Act, 42 U.S.C. 5404.

Peak cap construction means any roof peak construction that is either shipped loose or site constructed and is site installed to complete the roof ridge/peak of a home.

Peak flip construction means any roof peak construction that requires the joining of two or more cut top chord members on site. The cut top chords must be joined at the factory by straps, hinges, or other means.

Pier. That portion of the support system between the footing and the manufactured home, exclusive of shims. Types of piers include, but are not limited to: Manufactured steel stands; pressure-treated wood; manufactured concrete stands; concrete blocks; and portions of foundation walls.

Ramada. Any freestanding roof or shade structure, installed or erected above a manufactured home or any portion thereof.

Secretary. The Secretary of Housing and Urban Development, or an official of HUD delegated the authority of the Secretary with respect to the Act.

Site. An area of land upon which a manufactured home is installed.

Skirting. A weather-resistant material used to enclose the perimeter, under the living area of the home, from the bottom of the manufactured home to grade.

Stabilizing devices. All components of the anchoring and support systems, such as piers, footings, ties, anchoring equipment, anchoring assemblies, or any other equipment, materials, and methods of construction, that support and secure the manufactured home to the ground.

State. Each of the several states, the District of Columbia, the Commonwealth of Puerto Rico, Guam, the Virgin Islands, and American Samoa.

Support system. Pilings, columns, footings, piers, foundation walls, shims, and any combination thereof that, when properly installed, support the manufactured home.

Tie. Straps, cable, or securing devices used to connect the manufactured home to anchoring assemblies.

Ultimate load. The absolute maximum magnitude of load that a component or system can sustain, limited only by failure.

Utility connection. The connection of the manufactured home to utilities that include, but are not limited to, electricity, water, sewer, gas, or fuel oil.

Vertical tie. A tie intended to resist uplifting and overturning forces.

Wind zone. The areas designated on the Basic Wind Zone Map, as further defined in § 3280.305(c) of the Manufactured Home Construction and Safety Standards in this chapter, which delineate the wind design load requirements.

Working load. The maximum recommended load that may be exerted on a component or system determined by dividing the ultimate load of a component or system by an appropriate factor of safety.

[72 FR 59362, Oct. 19, 2007, as amended at 79 FR 53614, Sept. 10, 2014; 80 FR 53731, Sept. 8, 2015]

§ 3285.6 Final leveling of manufactured home.

The manufactured home must be adequately leveled prior to completion of the installation, so that the home's performance will not be adversely affected. The home will be considered adequately leveled if there is no more than ¼ inch difference between adjacent pier supports (frame or perimeter) and the exterior doors and windows of the home do not bind and can be properly operated.

Subpart B—Pre-Installation Considerations

§ 3285.101 Fire separation.

Fire separation distances must be in accordance with the requirements of Chapter 6 of NFPA 501A, 2003 edition (incorporated by reference, see § 3285.4) or the requirements of the LAHJ. The installation instructions must clearly indicate this requirement in a separate section and must caution installers to take into account any local requirements on fire separation.

§ 3285.102 Installation of manufactured homes in flood hazard areas.

(a) *Definitions*. Except to the extent otherwise defined in Subpart A, the terms used in this subpart are as defined in 44 CFR 59.1 of the National Flood Insurance Program (NFIP) regulations.

(b) *Applicability*. The provisions of this section apply to the initial installation of new manufactured homes located wholly or partly within a flood hazard area.

(c) *Pre-installation considerations*. Prior to the initial installation of a new manufactured home, the installer is responsible for determining whether the manufactured home site lies wholly or partly within a special flood hazard area as shown on the LAHJ's Flood Insurance Rate Map, Flood Boundary and Floodway Map, or Flood Hazard Boundary Map, or if no LAHJ, in accordance with NFIP regulations. If so located, and before an installation method is agreed upon, the map and supporting studies adopted by the LAHJ must be used to determine the flood hazard zone and base flood elevation at the site.

(d) *General elevation and foundation requirements*—(1) *Methods and practices*. Manufactured homes located wholly or partly within special flood hazard areas must be installed on foundations engineered to incorporate methods and practices that minimize flood damage during the base flood, in accordance with the requirements of the LAHJ, 44 CFR 60.3(a) through (e), and other provisions of 44 CFR referenced by those paragraphs.

(2) *Outside appliances*. (i) Appliances installed on the manufactured home site in flood hazard areas must be anchored and elevated to or above the same elevation as the lowest elevation of the lowest floor of the home.

(ii) Appliance air inlets and exhausts in flood hazard areas must be located at or above the same elevation as the lowest elevation of the lowest floor of the home.

(3) *Related guidance*. Refer to FEMA 85/September 1985, Manufactured Home Installation in Flood Hazard Areas, 1985 (incorporated by reference, see § 3285.4).

§ 3285.103 Site suitability with design zone maps.

Prior to the initial installation of a new manufactured home and as part of making the certification of the installation required under part 3286, upon effect, the installer is to verify that the design and construction of the manufactured home, as indicated on the design zone maps provided with the home, are suitable for the site location where the home is to be installed. The design zone maps are those identified in part 3280 of this chapter.

(a) *Wind zone*. Manufactured homes must not be installed in a wind zone that exceeds the design wind loads for which the home has been designed, as evidenced by the wind zone indicated on the home's data plate and as further defined by counties or local governments within affected states, as applicable, in § 3280.305(c)(2) of the Manufactured Home Construction and Safety Standards in this chapter.

(b) *Roof load zone*. Manufactured homes must not be located in a roof load zone that exceeds the design roof load for which the home has been designed, as evidenced by the roof load zone indicated on the home's data plate and as further defined by counties or local governments within affected states, as applicable, in § 3280.305(c)(3) of the Manufactured Home Construction and Safety Standards in this chapter. Refer to § 3285.315 for Special Snow Load Conditions.

(c) *Thermal zone*. Manufactured homes must not be installed in a thermal zone that exceeds the thermal zone for which the home has been designed, as evidenced by the thermal zone indicated on the heating/cooling certificate and insulation zone map and as further defined by counties or local governments within affected states, as applicable, in § 3280.504(b)(5) of the Manufactured Home Construction and Safety Standards in this chapter. The manufacturer may provide the heating/cooling information and insulation zone map on the home's data plate.

§ 3285.104 Moving manufactured home to location.

Refer to § 3285.902 for considerations related to moving the manufactured home to the site of installation.

§ 3285.105 Permits, other alterations, and on-site structures.

Refer to § 3285.903 for considerations related to permitting, other alterations, and on-site structures.

Subpart C—Site Preparation

§ 3285.201 Soil conditions.

To help prevent settling or sagging, the foundation must be constructed on firm, undisturbed soil or fill compacted to at least 90 percent of its maximum relative density. All organic material such as grass, roots, twigs, and wood scraps must be removed in areas where footings are to be placed. After removal of organic material, the home site must be graded or otherwise prepared to ensure adequate drainage, in accordance with § 3285.203.

§ 3285.202 Soil classifications and bearing capacity.

The soil classification and bearing capacity of the soil must be determined before the foundation is constructed and anchored. The soil classification and bearing capacity must be determined by one or more of the following methods, unless the soil bearing capacity is established as permitted in paragraph (f) of this section:

(a) *Soil tests*. Soil tests that are in accordance with generally accepted engineering practice; or

(b) *Soil records*. Soil records of the applicable LAHJ; or

(c) *Soil classifications and bearing capacities*. If the soil class or bearing capacity cannot be determined by test or soil records, but its type can be identified, the soil classification, allowable pressures, and torque values shown in Table to § 3285.202 may be used.

(d) A pocket penetrometer; or

(e) In lieu of determining the soil bearing capacity by use of the methods shown in the table, an allowable pressure of 1,500 psf may be used, unless the site-specific information requires the use of lower values based on soil classification and type.

(f) If the soil appears to be composed of peat, organic clays, or uncompacted fill, or appears to have unusual conditions, a registered professional geologist, registered professional engineer, or registered architect must determine the soil classification and maximum allowable soil bearing capacity.

TABLE TO § 3285.202

Soil classification		Soil description	Allowable soil bearing pressure (psf) [1]	Blow count ASTM D 1586–99	Torque probe [3] value [4] (inch-pounds)-
Classification number	ASTM D 2487–00 or D 2488–00 (incorporated by reference, see § 3285.4)				
1		Rock or hard pan	4000 +		
2	GW, GP, SW, SP, GM, SM	Sandy gravel and gravel; very than dense and/orcemented sands;coursegravel/cobbles;preloaded silts,clays and coral.	2000	40 +	More than 550.
3	GC, SC, ML, CL	Sand; silty sand; clayey sand; siltygravel; medium dense course sands; sandygravel; and very stiff silt, sand clays.	1500	24–39	351–550.
4A	CG, MH [2]	Loose to medium dense sands; firm to stiff clays and silts; alluvial fills.	1000	18–23	276–350.
4B	CH, MH [2]	Loose sands; firm clays; alluvial fills	1000	12–17	175–275.
5	OL, OH, PT	Uncompacted fill; peat; organic clays	Refer to 3285.202(e).	0–11	Less than 175.

Notes:

[1] The values provided in this table have not been adjusted for overburden pressure, embedment depth, water table height, or settlement problems.

[2] For soils classified as CH or MH, without either torque probe values or blow count test results, selected anchors must be rated for a 4B soil.

[3] The torque test probe is a device for measuring the torque value of soils to assist in evaluating the holding capacity of the soil in which the ground anchor is placed. The shaft must be of suitable length for the full depth of the ground anchor.

[4] The torque value is a measure of the load resistance provided by the soil when subject to the turning or twisting force of the probe.

§ 3285.203 Site Drainage.

(a) *Purpose*. Drainage must be provided to direct surface water away from the home to protect against erosion of foundation supports and to prevent water build-up under the home, as shown in Figure to § 3285.203.

(b) The home site must be graded as shown in Figure to § 3285.203, or other methods, such as a drain tile and automatic sump pump system, must be provided to remove any water that may collect under the home.

(c) All drainage must be diverted away from the home and must slope a minimum of one-half inch per foot away from the foundation for the first ten feet. Where property lines, walls, slopes, or other physical conditions prohibit this slope, the site must be provided with drains or swales or otherwise graded to drain water away from the structure, as shown in Figure to § 3285.203.

(d) *Sloped site considerations*. The home, where sited, must be protected from surface runoff from the surrounding area.

(e) Refer to § 3285.902 regarding the use of drainage structures to drain surface runoff.

(f) *Gutters and downspouts*. Manufacturers must specify in their installation instructions whether the home is suitable for the installation of gutters and downspouts. If suitable, the installation instructions must indicate that when gutters and downspouts are installed, the runoff must be directed away from the home.

Figure to § 3285.203 - Grading and drainage.

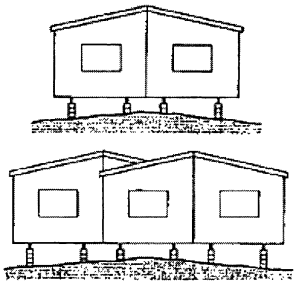

Crown and grade site to slope away from the home

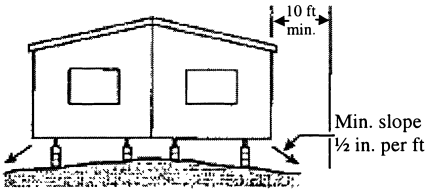

Home sites must be prepared so that there will be no depressions in which surface water may accumulate beneath the home. The area of the site covered by the manufactured home must be graded, sloped, or designed to provide drainage from beneath the home or to the property line.

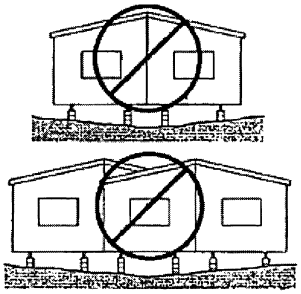

Do not grade site or set the home so that water collects beneath the home.

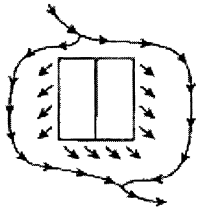

Natural drainage must be diverted around and away from the home.

§ 3285.204 Ground moisture control.

(a) *Vapor retarder*. If the space under the home is to be enclosed with skirting or other materials, a vapor retarder must be installed to cover the ground under the home, unless the home is installed in an arid region with dry soil conditions.

(b) *Vapor retarder material*. A minimum of six mil polyethylene sheeting or its equivalent must be used.

(c) *Proper installation*. (1) The entire area under the home must be covered with the vapor retarder, as noted in § 3285.204(a), except for areas under open porches, decks, and recessed entries. Joints in the vapor retarder must be overlapped at least 12 inches.

(2) The vapor retarder may be placed directly beneath footings, or otherwise installed around or over footings placed at grade, and around anchors or other obstructions.

(3) Any voids or tears in the vapor retarder must be repaired. At least one repair method must be provided in the manufacturer's installation instructions.

Subpart D—Foundations

§ 3285.301 General.

(a) Foundations for manufactured home installations must be designed and constructed in accordance with this subpart and must be based on site conditions, home design features, and the loads the home was designed to withstand, as shown on the home's data plate.

(b) Foundation systems that are not pier and footing type configurations may be used when verified by engineering data and designed in accordance with § 3285.301(d), consistent with the design loads of the MHCSS. Pier and footing specifications that are different than those provided in this subpart, such as block size, metal piers, section width, loads, and spacing, may be used when verified by engineering data that comply with §§ 3285.301(c) and (d) and are capable of resisting all design loads of the MHCSS.

(c) All foundation details, plans, and test data must be designed and certified by a registered professional engineer or registered architect, and must not take the home out of compliance with the MHCSS. (See 3285.2)

(d) Alternative foundation systems or designs are permitted in accordance with either of the following:

(1) Systems or designs must be manufactured and installed in accordance with their listings by a nationally recognized testing agency, based on a nationally recognized testing protocol; or

(2) System designs must be prepared by a professional engineer or a registered architect or tested and certified by a professional engineer or registered architect in accordance with acceptable engineering practice and must be manufactured and installed so as not to take the home out of compliance with the Manufactured Home Construction and Safety Standards (part 3280 of this chapter).

§ 3285.302 Flood hazard areas.

In flood hazard areas, foundations, anchorings, and support systems must be capable of resisting loads associated with design flood and wind events or combined wind and flood events, and homes must be installed on foundation supports that are designed and anchored to prevent floatation, collapse, or lateral movement of the structure. Manufacturer's installation instructions must indicate whether:

(a) The foundation specifications have been designed for flood-resistant considerations, and, if so, the conditions of applicability for velocities, depths, or wave action; or

(b) The foundation specifications are not designed to address flood loads.

§ 3285.303 Piers.

(a) *General*. The piers used must be capable of transmitting the vertical live and dead loads to the footings or foundation.

(b) *Acceptable piers—materials specification*. (1) Piers are permitted to be concrete blocks; pressure-treated wood with a water borne preservative, in accordance with AWPA Standard U1–04 (incorporated by reference, see § 3285.4) for Use Category 4B ground contact applications; or adjustable metal or concrete piers.

(2) Manufactured piers must be listed or labeled for the required vertical load

capacity, and, where required by design, for the appropriate horizontal load capacity.

(c) *Design requirements*. (1) *Load-bearing capacity*. The load bearing capacity for each pier must be designed to include consideration for the dimensions of the home, the design dead and live loads, the spacing of the piers, and the way the piers are used to support the home.

(2) Center beam/mating wall support must be required for multi-section homes and designs must be consistent with Tables 2 and 3 to § 3285.303 and Figures A, B, and C to § 3285.310.

(d) *Pier loads*. (1) Design support configurations for the pier loads, pier spacing, and roof live loads must be in accordance with Tables 1, 2, and 3 to § 3285.303 and the MHCSS. Other pier designs are permitted in accordance with the provisions of this subpart.

(2) Manufactured piers must be rated at least to the loads required to safely support the dead and live loads, as required by § 3285.301, and the installation instructions for those piers must be consistent with Tables 1, 2, and 3 to this section.

TABLE 1 TO § 3285.303—FRAME BLOCKING ONLY/PERIMETER SUPPORT NOT REQUIRED EXCEPT AT OPENINGS

Pier spacing	Roof live load (psf)	Location	Load (lbs.)
4 ft. 0 in.	20	Frame	2,900
	30	Frame	3,300
	40	Frame	3,600
6 ft. 0 in.	20	Frame	4,200
	30	Frame	4,700
	40	Frame	5,200
8 ft. 0 in.	20	Frame	5,500
	30	Frame	6,200
	40	Frame	6,900
10 ft. 0 in.	20	Frame	6,800
	30	Frame	7,600
	40	Frame	8,500

NOTES: 1. See Table to § 3285.312 for cast-in-place footing design by using the noted loads.

2. Table 1 is based on the following design assumptions: maximum 16 ft. nominal section width (15 ft. actual width), 12'' eave, 10'' I-beam size, 300 lbs. pier dead load, 10 psf roof dead load, 6 psf floor dead load, 35 plf wall dead load, and 10 plf chassis dead load.

3. Interpolation for other pier spacing is permitted.

4. The pier spacing and loads shown in the above table do not consider flood or seismic loads and are not intended for use in flood or seismic hazard areas. In those areas, the foundation support system is to be designed by a professional engineer or architect.

5. See Table to § 3285.312 for sizing of footings.

TABLE 2 TO § 3285.303—FRAME PLUS PERIMETER BLOCKING/PERIMETER BLOCKING REQUIRED

Maximum pier spacing	Roof live load(psf)	Location	Load (lbs.)
4 ft. 0 in.	20	Frame	1,400
		Perimeter	1,900
		Mating	3,200
4 ft. 0 in.	30	Frame	1,400
		Perimeter	2,300
		Mating	3,800
4 ft. 0 in.	40	Frame	1,400
		Perimeter	2,600
		Mating	4,400
6 ft. 0 in.	20	Frame	1,900
		Perimeter	2,700
		Mating	4,700
6 ft. 0 in.	30	Frame	1,900
		Perimeter	3,200
		Mating	5,600
6 ft. 0 in.	40	Frame	1,900
		Perimeter	3,700
		Mating	6,500
8 ft. 0 in.	20	Frame	2,400
		Perimeter	3,500
		Mating	6,100
8 ft. 0 in.	30	Frame	2,400
		Perimeter	4,200
		Mating	7,300
8 ft. 0 in.	40	Frame	2,400
		Perimeter	4,800
		Mating	8,500
10 ft. 0 in.	20	Frame	2,900
		Perimeter	4,300
		Mating	7,600
10 ft. 0 in.	30	Frame	2,900
		Perimeter	5,100
		Mating	9,100
10 ft. 0 in.	40	Frame	2,900
		Perimeter	6,000
		Mating	10,600

NOTES: 1. See Table to § 3285.312 for cast-in-place footing design by using the noted loads.

2. Mating wall perimeter piers and footings only required under full height mating walls supporting roof loads. Refer to Figures A and B to § 3285.310.

3. Table 2 is based on the following design assumptions: maximum 16 ft. nominal section width (15 ft. actual width), 12'' eave, 10''

I-beam size, 300 lbs. pier dead load, 10 psf roof dead load, 6 psf floor dead load, 35 plf wall dead load, and 10 plf chassis dead load.

4. Interpolation for other pier spacing is permitted.

5. The pier spacing and loads shown in the above table do not consider flood or seismic loads and are not intended for use in flood or seismic hazard areas. In those areas, the foundation support system is to be designed by a professional engineer or architect.

6. See Table to § 3285.312 for sizing of footings.

TABLE 3 TO § 3285.303—RIDGE BEAM SPAN FOOTING CAPACITY

Mating wall opening (ft)	Roof live load (psf)	Pier and footing load (lbs.)
5	20	1,200
	30	1,600
	40	1,900
10	20	2,300
	30	3,100
	40	3,800
15	20	3,500
	30	4,700
	40	5,800
20	20	4,700
	30	6,200
	40	7,500
25	20	5,800
	30	7,800
	40	9,700
30	20	7,000
	30	9,300
	40	11,600
35	20	8,100
	30	10,900
	40	13,600

NOTES: 1. See Table to § 3285.312 for cast-in-place footing design by using the noted loads.

2. Table 3 is based on the following design assumptions: maximum 16 ft. nominal section width (15 ft. actual width), 10″ I-beam size, 300 lbs. pier dead load, 10 psf roof dead load, 6 psf floor dead load, 35 plf wall dead load, and 10 plf chassis dead load.

3. Loads listed are maximum column loads for each section of the manufactured home.

4. Interpolation for maximum allowable pier and column loads is permitted for mateline openings between those shown in the table.

5. The pier spacing and loads shown in the above table do not consider flood or seismic loads and are not intended for use in flood or seismic hazard areas. In those areas, the foundation support system must be designed by a professional engineer or registered architect.

6. See Table to § 3285.312 for sizing of footings.

§ 3285.304 Pier configuration.

(a) *Concrete blocks.* Installation instructions for concrete block piers must be developed in accordance with the following provisions and must be consistent with Figures A and B to § 3285.306.

(1) Load-bearing (not decorative) concrete blocks must have nominal dimensions of at least 8 inches × 8 inches × 16 inches;

(2) The concrete blocks must be stacked with their hollow cells aligned vertically; and

(3) When piers are constructed of blocks stacked side-by-side, each layer must be at right angles to the preceding one, as shown in Figure B to § 3285.306.

(b) *Caps.* (1) Structural loads must be evenly distributed across capped-hollow block piers, as shown in Figures A and B to § 3285.306.

(2) Caps must be solid concrete or masonry at least 4 inches in nominal thickness, or hardboard lumber at least 2 inches nominal in thickness; or be corrosion-protected minimum one-half inch thick steel; or be of other listed materials.

(3) All caps must be of the same length and width as the piers on which they rest.

(4) When split caps are used on double-stacked blocks, the caps must be installed with the long dimension across the joint in the blocks below.

(c) *Gaps.* Any gaps that occur during installation between the bottom of the main chassis beam and foundation support system must be filled by:

(1) Nominal 4 inch × 6 inch × 1 inch shims to level the home and fill any gaps between the base of the main chassis beam and the top of the pier cap;

(2) Shims must be used in pairs, as shown in Figures A and B to § 3285.306, and must be driven in tightly so that they do not occupy more than one inch of vertical height; and

(3) Hardwood plates no thicker than 2 inches nominal in thickness or 2 inch or 4 inch nominal concrete block must be used to fill in any remaining vertical gaps.

(d) *Manufactured pier heights.* Manufactured pier heights must be selected so that the adjustable risers do not extend more than 2 inches when finally positioned.

§ 3285.305 Clearance under homes.

A minimum clearance of 12 inches must be maintained between the lowest member of the main frame (I-beam or channel beam) and the grade under all areas of the home.

§ 3285.306 Design procedures for concrete block piers.

(a) *Frame piers less than 36 inches high.* (1) Frame piers less than 36 inches high are permitted to be constructed of single, open, or closed-cell concrete blocks, 8 inches '' 8 inches '' 16 inches, when the design capacity of the block is not exceeded.

(2) The frame piers must be installed so that the long sides are at right angles to the supported I-beam, as shown in Figure A to this section.

(3) The concrete blocks must be stacked with their hollow cells aligned vertically and must be positioned at right angles to the footings.

(4) Horizontal offsets from the top to the bottom of the pier must not exceed one-half inch.

(5) Mortar is not required, unless specified in the installation instructions or required by a registered professional engineer or registered architect.

(b) *Frame piers 36 inches to 67 inches high and corner piers.* (1) All frame piers between 36 inches and 67 inches high and all corner piers over three blocks high must be constructed out of double, interlocked concrete blocks, as shown in Figure B to this section, when the design capacity of the block is not exceeded. Mortar is not required for concrete block piers, unless otherwise specified in the installation instructions or required by a professional engineer or registered architect.

(2) Horizontal offsets from the top to the bottom of the pier must not exceed one inch.

(c) *All piers over 67 inches high.* Piers over 67 inches high must be designed by a registered professional engineer or registered architect, in accordance with acceptable engineering practice. Mortar is not required for concrete block piers, unless otherwise specified in the manufacturer installation instructions or by the design.

Figure A to § 3285.306 Typical Footing and Pier Design, Single Concrete Block.

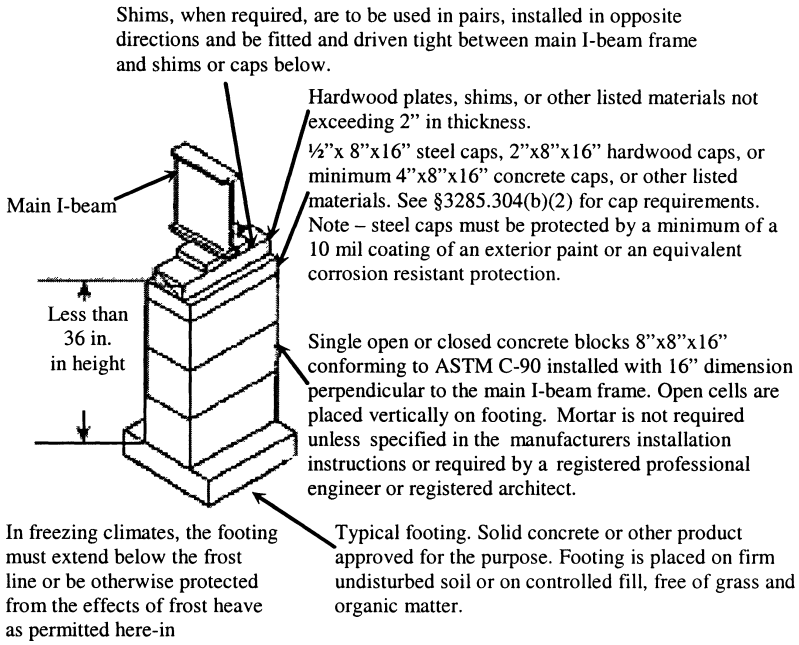

Figure B to 3285.306(b) Typical Footing and Pier Installation, Double Concrete Block.

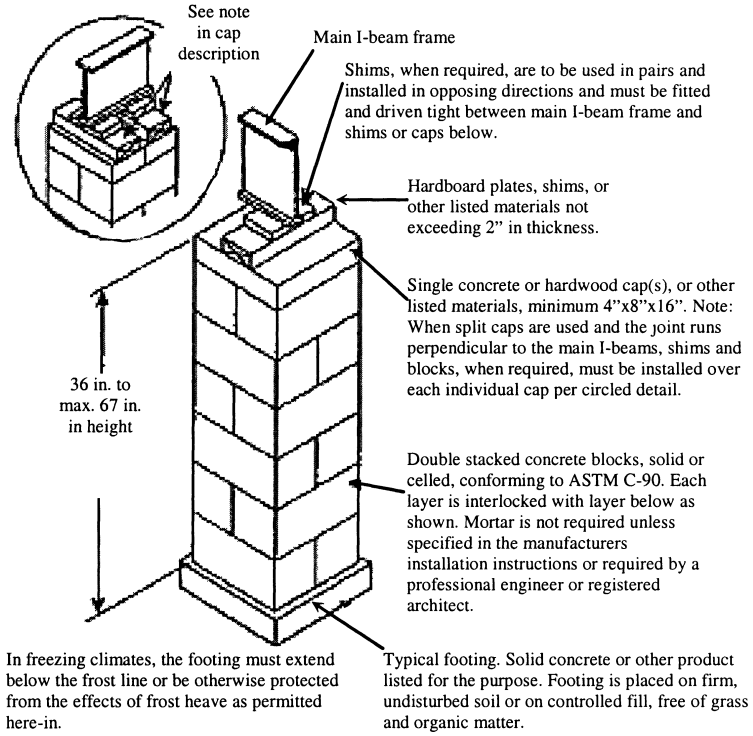

§ 3285.307 Perimeter support piers.

(a) Piers required at mate-line supports, perimeter piers, and piers at exterior wall openings are permitted to be constructed of single open-cell or closed-cell concrete blocks, with nominal dimensions of 8 inches × 8 inches × 16 inches, to a maximum height of 54 inches, as shown in Figure A to this section, when the design capacity of the block is not exceeded.

(b) Piers used for perimeter support must be installed with the long dimension parallel to the perimeter rail.

§ 3285.308 Manufactured piers.

(a) Manufactured piers must be listed and labeled and installed to the pier manufacturer's installation instructions. See § 3285.303(d)(2) for additional requirements.

(b) Metal or other manufactured piers must be provided with protection against weather deterioration and corrosion at least equivalent to that provided by a coating of zinc on steel of .30 oz./ft.^{2} of surface coated.

§ 3285.309 [Reserved]

§ 3285.310 Pier location and spacing.

(a) The location and spacing of piers depends upon the dimensions of the home, the live and dead loads, the type of construction (single-or multi-section), I-beam size, soil bearing capacity, footing size, and such other factors as the location of doors or other openings.

(b) Mate-line and column pier supports must be in accordance with this subpart and consistent with Figures A through C to this section, unless the pier support and footing configuration is designed by a registered professional engineer or registered architect.

(c) Piers supporting the frame must be no more than 24 inches from both ends and not more than 120 inches center to center under the main rails.

(d) *Pier support locations.* Pier support locations and spacing must be presented to be consistent with Figures A and B to § 3285.312, as applicable, unless alternative designs are provided by a professional engineer or registered architect in accordance with acceptable engineering practice.

Figure A to § 3285.310 Typical Mate-Line Column Pier and Mating Wall Support when Frame Only Blocking is Required.

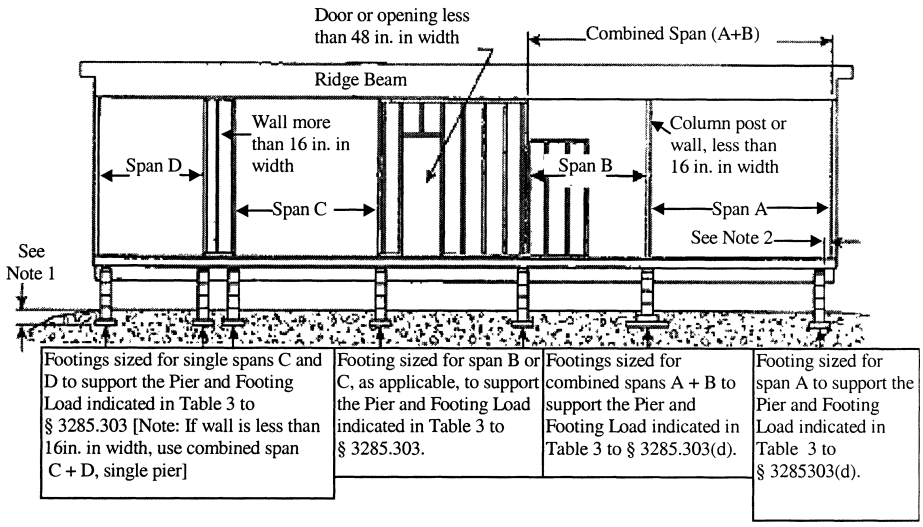

NOTES: 1. Bottom of footings must extend below frost line depth, unless designed for placement above the frost line. (See § 3285.312(b)).

2. Piers may be offset up to 6 in. in either direction along the supported members to allow for plumbing, electrical, mechanical, equipment, crawlspaces, or other devices.

3. Single-stack concrete block pier loads must not exceed 8,000 lbs.

4. Prefabricated piers must not exceed their approved or listed maximum vertical or horizontal design loads.

5. When a full-height mating wall does not support the ridge beam, this area is considered an unsupported span—Span B.

6. Piers are not required at openings in the mating wall that are less than 48 inches in width. Place piers on both sides of mating wall openings that are 48 inches or greater in width. For roof loads of 40 psf or greater, a professional engineer or registered architect must determine the maximum mating wall opening permitted without pier or other supports.

Figure B to § 3285.310(b) Typical Mate-Line Column Pier and Mating Wall Support When Perimeter Blocking is Required.

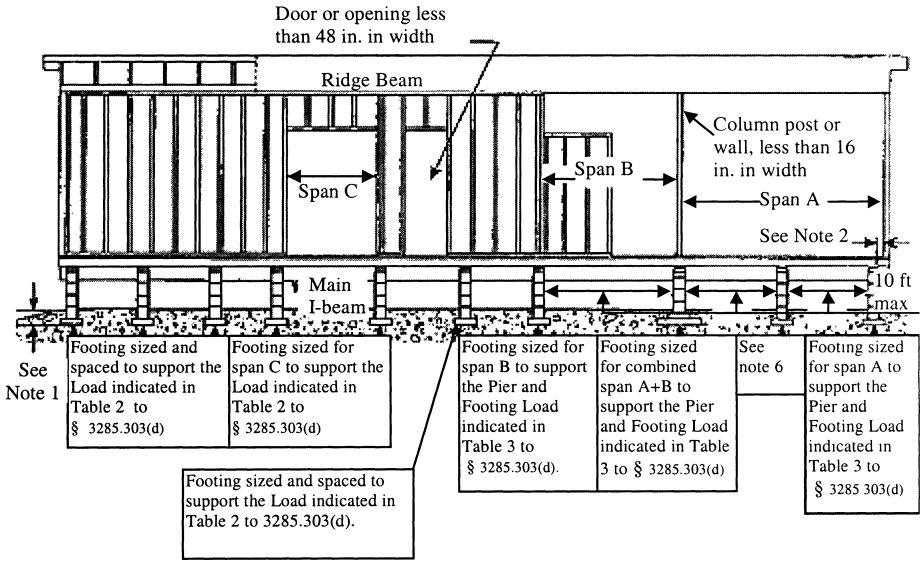

NOTES: 1. Bottom of footings must be below the frost line depth, unless designed for placement above the frost line. (See § 3285.312(b)).

2. Piers may be offset 6 in. in either direction along supported members to allow for plumbing electrical, mechanical equipment, crawlspaces, or other devices.

3. Single stack concrete block pier loads must not exceed 8,000 lbs.

4. Piers are not required at openings in the mating wall that are less than 48 inches in width. Place piers on both sides of mating wall openings that are 48 inches or greater in width. For roof loads of 40 psf or greater, a professional engineer or registered architect must determine the maximum mating wall opening permitted without pier or other supports.

5. When a full-height mating wall does not support the ridge beam, this area is considered an unsupported span—Span B.

6. In areas where the open span is greater than 10 ft., intermediate piers and footings must be placed at maximum 10 ft. on center.

7. Prefabricated piers must not exceed their approved or listed maximum horizontal or vertical design loads.

8. Column piers are in addition to piers required under full-height mating walls.

Figure C to § 3285.310 Typical Mate-Line Column and Piers.

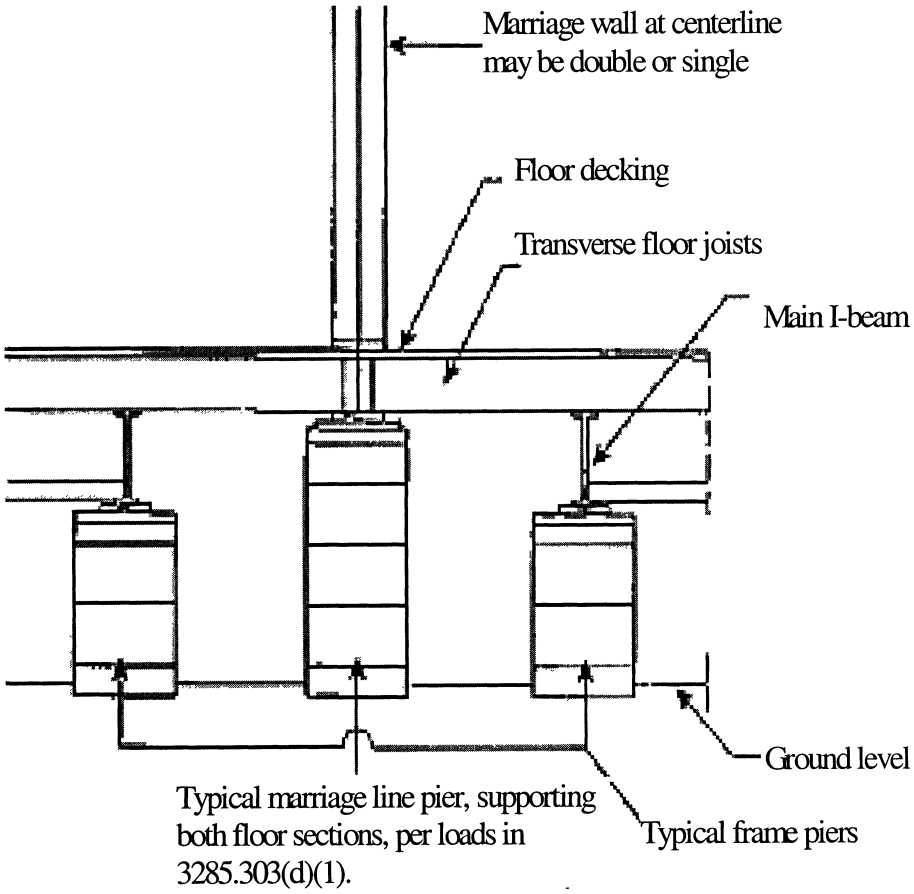

NOTES: 1. Mate-line column support piers are installed with the long dimension of the concrete block perpendicular to the rim joists.

2. Pier and footing designed to support both floor sections. Loads as listed in Table 3 to §3285.303 are total column loads for both sections.

§3285.311 Required perimeter supports.

(a) Perimeter pier or other supports must be located as follows:

(1) On both sides of side wall exterior doors (such as entry, patio, and sliding glass doors) and any other side wall openings of 48 inches or greater in width, and under load-bearing porch posts, factory installed fireplaces, and fireplace stoves).

(2) Other perimeter supports must be:

(i) Located in accordance with Table 2 to §3285.303; or

(ii) Provided by other means such as additional outriggers or floor joists. When this alternative is used, the designs required by §3285.301 must consider the additional loads in sizing the pier and footing supports under the main chassis beam.

(b) For roof live loads of 40 psf or greater, a professional engineer or architect must determine the maximum sidewall opening permitted without perimeter pier or other supports.

(c) The location and installation of any perimeter pier support must not take the home out of compliance with the Manufactured Home Construction and Safety Standards (part 3280 of this chapter).

§ 3285.312 Footings.

(a) Materials approved for footings must provide equal load-bearing capacity and resistance to decay, as required by this section. Footings must be placed on undisturbed soil or fill compacted to 90 percent of maximum relative density. A footing must support every pier. Footings are to be either:

(1) *Concrete.*

(i) Four inch nominal precast concrete pads meeting or exceeding ASTM C 90–02a, Standard Specification for Loadbearing Concrete Masonry Units (incorporated by reference, see § 3285.4), without reinforcement, with at least a 28-day compressive strength of 1,200 pounds per square inch (psi); or

(ii) Six inch minimum poured-in-place concrete pads, slabs, or ribbons with at least a 28-day compressive strength of 3,000 pounds per square inch (psi). Site-specific soil conditions or design load requirements may also require the use of reinforcing steel in cast-in-place concrete footings.

(2) *Pressure-treated wood.*

(i) Pressure-treated wood footings must consist of a minimum of two layers of nominal 2-inch thick pressure-treated wood, a single layer of nominal ¾-inch thick, pressure-treated plywood with a maximum size of 16 inches by 16 inches, or at least two layers of ¾-inch thick, pressure-treated plywood for sizes greater than 16 inches by 16 inches. Plywood used for this purpose is to be rated exposure 1 or exterior sheathing, in accordance with PS1–95, Construction and Industrial Plywood (incorporated by reference, see § 3285.4).

(ii) Pressure treated lumber is to be treated with a water-borne adhesive, in accordance with AWPA Standard U1–04 (incorporated by reference, see § 3285.4) for Use Category 4B ground contact applications.

(iii) Cut ends of pressure treated lumber must be field-treated, in accordance with AWPA Standard M4–02 (incorporated by reference, see § 3285.4).

(3) *ABS footing pads.*

(i) ABS footing pads are permitted, provided they are installed in accordance with the pad manufacturer installation instructions and certified for use in the soil classification at the site.

(ii) ABS footing pads must be listed or labeled for the required load capacity.

(4) Other Materials. Footings may be of other materials than those identified in this section, provided they are listed for such use and meet all other applicable requirements of this subpart.

(b) *Placement in freezing climates.* Footings placed in freezing climates must be designed using methods and practices that prevent the effects of frost heave by one of the following methods:

(1) Conventional footings. Conventional footings must be placed below the frost line depth for the site unless an insulated foundation or monolithic slab is used (refer to §§ 3285.312(b)(2) and 3285.312(b)(3)). When the frost line depth is not available from the LAHJ, a registered professional engineer, registered architect, or registered geologist must be consulted to determine the required frost line depth for the manufactured home site. This is not subject to the provisions in § 3285.2(c) that also require review by the manufacturer and approval by its DAPIA for any variations to the manufacturer's installation instructions for support and anchoring.

(2) *Monolithic slab systems.* A monolithic slab is permitted above the frost line when all relevant site-specific conditions, including soil characteristics, site preparation, ventilation, and insulative properties of the under floor enclosure, are considered and anchorage requirements are accommodated as set out in § 3285.401. The monolithic slab system must be designed by a registered professional engineer or registered architect:

(i) In accordance with acceptable engineering practice to prevent the effects of frost heave; or

(ii) In accordance with SEI/ASCE 32–01 (incorporated by reference, see § 3285.4).

(3) *Insulated foundations.* An insulated foundation is permitted above the frost line, when all relevant site-specific conditions, including soil characteristics, site preparation, ventilation, and insulative properties of the under floor enclosure, are considered, and the foundation is designed by a registered professional engineer or registered architect:

(i) In accordance with acceptable engineering practice to prevent the effects of frost heave; or

(ii) In accordance with SEI/ASCE 32–01 (incorporated by reference, see § 3285.4).

(c) *Sizing of footings.* The sizing and layout of footings depends on the load-bearing capacity of the soil, footings, and the piers. See §§ 3285.202 and 3285.303, and Table to 3285.312.

Figure A to § 3285.312 Typical Blocking Diagram for Single Section Homes

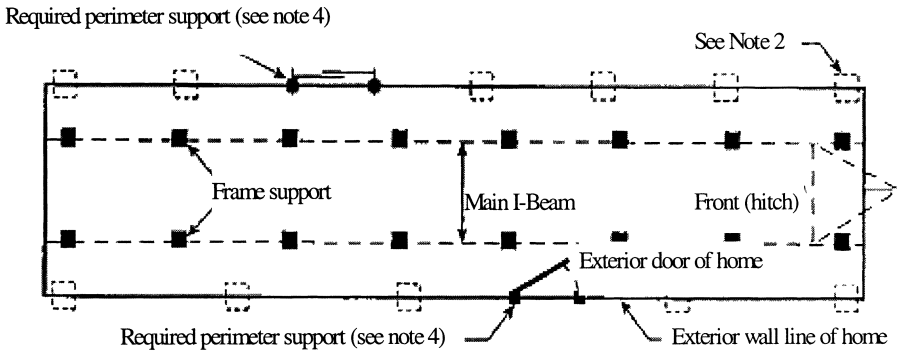

NOTES: 1. Refer to Table 1 of § 3285.303 for pier and footing requirements when frame blocking only is used.

2. In addition to blocking required by § 3285.311, see Table 2 to § 3285.303 for maximum perimeter blocking loads.

3. End piers under main I-beams may be set back a maximum of 24 inches, as measured from the outside edge of the floor to the center of the pier.

4. Place piers on both sides of sidewall exterior doors, patio doors, and sliding glass doors; under porch posts, factory-installed fireplaces, and fireplace stoves; under jamb studs at multiple window openings; and at any other sidewall openings 48 inches or greater in width. For roof loads of 40 psf or greater, a professional engineer or registered architect must determine the maximum sidewall opening permitted without perimeter supports. See §§ 3285.307 and 3285.311 for additional requirements and for locating perimeter supports.

Figure B to § 3285.312 Typical Blocking Diagram for Multi-section Home.

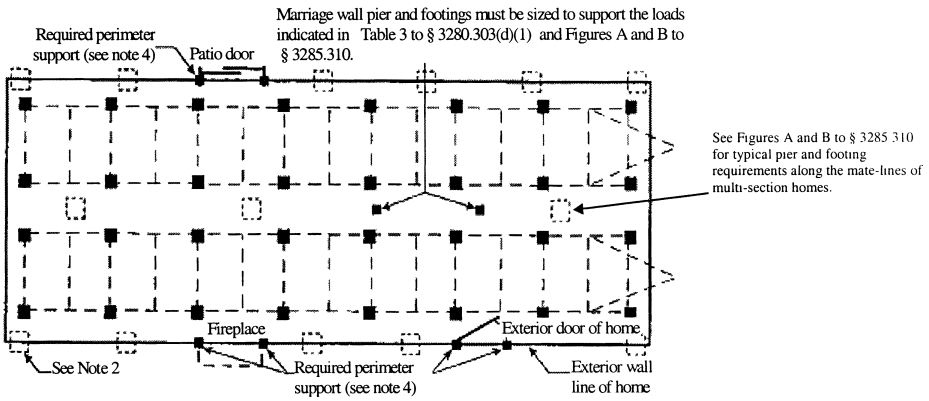

NOTES: 1. Refer to Table 1 to § 3285.303 for pier and footing requirements when frame blocking only is used.

2. In addition to blocking required by § 3285.311, see Tables 2 and 3 to § 3285.303 for maximum perimeter blocking loads.

3. End piers under main I-beams may be set back a maximum of 24 inches, as measured from the outside edge of the floor to the center of the pier.

4. Place piers on both sides of sidewall exterior doors, patio doors, and sliding glass doors; under porch posts, factory-installed fireplaces, and fireplace stoves; under jamb studs at multiple window openings; and at any other sidewall openings of 48 inches or greater in width. For roof loads of 40 psf or greater, a professional engineer or registered architect must determine the maximum side wall opening permitted without perimeter supports or mating wall opening permitted without pier or other supports. See §§ 3285.307 and 3285.311 for additional information on requirements and for locating perimeter supports.

5. When an end pier under the mate-line also serves as a column pier, it may be set back a maximum of 6 in., as measured from the inside edge of the exterior wall to the center of the pier.

TABLE TO § 3285.312—THE SIZE AND CAPACITY FOR UNREINFORCED CAST-IN-PLACE FOOTINGS

Soil capacity (psf)	Minimum footing size (in.)	8 in. × 16 in. pier		16 in. × 16 in. pier	
		Maximum footing capacity (lbs.)	Unreinforced cast-in-place minimum thickness (in.)	Maximum footing capacity (lbs.)	Unreinforced cast-in-place minimum thickness (in.)
1,000	16 × 16	1,600	6	1,600	6
	20 × 20	2,600	6	2,600	6
	24 × 24	3,700	6	3,700	6
	30 × 30	5,600	8	5,800	6
	36 × 36	7,900	10	8,100	8
	42 × 42	[4] 10,700	10	10,700	10
	48 × 48	[4] 13,100	12	13,600	10
1,500	16 × 16	2,500	6	2,500	6
	20 × 20	4,000	6	4,000	6
	24 × 24	5,600	8	5,700	6
	30 × 30	[4] 8,500	10	8,900	8
	36 × 36	[4] 12,400	10	12,600	8
	42 × 42	[4] 16,500	12	[4] 16,800	10
	48 × 48	[4] 21,200	14	[4] 21,600	12
2,000	16 × 16	3,400	6	3,400	6
	20 × 20	5,300	6	5,300	6
	24 × 24	7,600	8	7,700	6
	30 × 30	[4] 11,700	10	11,900	8
	36 × 36	[4] 16,700	15	[4] 16,900	10
	42 × 42	[4] 21,700	18	[4] 22,700	12

TABLE TO § 3285.312—THE SIZE AND CAPACITY FOR UNREINFORCED CAST-IN-PLACE FOOTINGS—Continued

Soil capacity (psf)	Minimum footing size (in.)	8 in. × 16 in. pier		16 in. × 16 in. pier	
		Maximum footing capacity (lbs.)	Unreinforced cast-in-place minimum thickness (in.)	Maximum footing capacity (lbs.)	Unreinforced cast-in-place minimum thickness (in.)
2,500	16 × 16	4,300	6	4,300	6
	20 × 20	6,700	6	6,700	6
	24 × 24	[4] 9,600	8	9,700	6
	30 × 30	[4] 14,800	10	15,000	8
	36 × 36	[4] 20,700	12	[4] 21,400	10
3,000	16 × 16	5,200	6	5,200	6
	20 × 20	8,100	8	8,100	6
	24 × 24	[4] 11,500	10	11,700	6
	30 × 30	[4] 17,800	12	[4] 18,100	8
	36 × 36	[4] 25,400	14	[4] 25,900	10
4,000	16 × 16	7,000	6	7,000	6
	20 × 20	[4] 10,800	8	10,900	6
	24 × 24	[4] 15,500	10	15,600	8
	30 × 30	[4] 23,300	12	[4] 24,200	10

NOTES: 1. The footing sizes shown are for square pads and are based on the area (in.^{2}), shear and bending required for the loads shown. Other configurations, such as rectangular or circular configurations, can be used, provided the area and depth is equal to or greater than the area and depth of the square footing shown in the table, and the distance from the edge of the pier to the edge of the footing is not less than the thickness of the footing.

2. The 6 in. cast-in-place values can be used for 4 in. unreinforced precast concrete footings.

3. The capacity values listed have been reduced by the dead load of the concrete footing.

4. Concrete block piers must not exceed their design capacity of 8,000 lbs. for 8″ × 16″ single stack block and 16,000 lbs. for 16″ × 16″ double stack block.

5. A registered professional engineer or registered architect must prepare the design, if the design loads exceed the capacity for single or double stack concrete block piers shown in footnote 4.

§ 3285.313 Combination systems.

Support systems that combine both load-bearing capacity and uplift resistance must also be sized and designed for all applicable design loads.

§ 3285.314 [Reserved]

§ 3285.315 Special snow load conditions.

(a) *General*. Foundations for homes designed for and located in areas with roof live loads greater than 40 psf must be designed by the manufacturer for the special snow load conditions, in accordance with acceptable engineering practice. Where site or other conditions prohibit the use of the manufacturer's instructions, a registered professional engineer or registered architect must design the foundation for the special snow load conditions.

(b) *Ramadas*. Ramadas may be used in areas with roof live loads greater than 40 psf. Ramadas are to be self-supporting, except that any connection to the home must be for weatherproofing only.

Subpart E—Anchorage Against Wind

§ 3285.401 Anchoring instructions.

(a) After blocking and leveling, the manufactured home must be secured against the wind by use of anchor assembly type installations or by connecting the home to an alternative foundation system. See § 3285.301.

(b) For anchor assembly type installations, the installation instructions must require the home to be secured against the wind, as described in this section. The installation instructions and design for anchor type assemblies must be prepared by a registered professional engineer or registered architect, in accordance with acceptable engineering practice, the design loads of the MHCSS, and § 3285.301(d).

(c) All anchoring and foundation systems must be capable of meeting the

loads that the home was designed to withstand required by part 3280, subpart D of this chapter, as shown on the home's data plate. Exception: Manufactured homes that are installed in less restrictive roof load zone and wind zone areas may have foundation or anchorage systems that are capable of meeting the lower design load provisions of the Standards, if the design for the lower requirements is either provided in the installation instructions or the foundation and anchorage system is designed by a professional engineer or registered architect.

(d) The installation instructions are to include at least the following information and details for anchor assembly-type installations:

(1) The maximum spacing for installing diagonal ties and any required vertical ties or straps to ground anchors;

(2) The minimum and maximum angles or dimensions for installing diagonal ties or straps to ground anchors and the main chassis members of the manufactured home;

(3) Requirements for connecting the diagonal ties to the main chassis members of the manufactured home. If the diagonal ties are attached to the bottom flange of the main chassis beam, the frame must be designed to prevent rotation of the beam;

(4) Requirements for longitudinal and mating wall tie-downs and anchorage;

(5) The method of strap attachment to the main chassis member and ground anchor, including provisions for swivel-type connections;

(6) The methods for protecting vertical and diagonal strapping at sharp corners by use of radius clips or other means; and

(7) As applicable, the requirements for sizing and installation of stabilizer plates.

§ 3285.402 Ground anchor installations.

(a) *Ground anchor certification and testing.* (1) Each ground anchor assembly must be manufactured and provided with installation instructions, and must be labeled or otherwise identified and subject to an on-going quality assurance surveillance program in accordance with its listing or certification (see 24 CFR 3285.5) by a nationally recognized testing laboratory. A registered professional engineer or architect must certify that each ground anchor assembly is capable of resisting all loads in paragraph (c) of this section based on the test methods in paragraph (b) of this section for use in soil(s) classified in accordance with § 3285.202.

(2) Each ground anchor assembly that has been listed prior to November 10, 2014 is not subject to paragraph (b) of this section, provided it has been previously tested in accordance with this paragraph. A professional engineer or registered architect must have certified the testing. The ground anchor must be listed by a nationally recognized testing agency and the listing or certification includes or has met all of the following requirements:

(i) A minimum of three tests meeting all of the requirements of this section were conducted for each ground anchor assembly design;

(ii) Each of the ground anchor assembly designs tested must have met or exceeded a working load of 3,150 pounds and sustained an ultimate load of 4,725 pounds in the weakest soil classification for which the anchors were tested and certified;

(iii) The soil in which the anchor was certified has been classified by one of the methods indicated in § 3285.202 of these Standards and the anchor is not listed for use in a weaker/higher soil classification than tested and identified in the Table to § 3285.202;

(iv) A test report was provided for each ground anchor assembly design that identifies the soil classification in which the ground anchor was tested and listed and includes complete specifications and dimensions for the ground anchor assembly;

(v) For each of the ground anchor assemblies tested, the maximum deflection at 3,150 pounds did not exceed two inches vertically or three inches horizontally;

(vi) For each of the ground anchor assemblies tested, the maximum deflection at 4,725 pounds did not exceed two inches vertically or three inches horizontally;

(vii) For the stabilizer plate test method, at least three tests were performed at the minimum angle of pull to the horizontal specified in the listing and the minimum angle of pull to the horizontal must have been at least 30 degrees. Any existing ground anchor assembly tests and certifications where the angle of pull was less than 30 degrees will need to be re-evaluated in accordance with paragraph (b) of this section; and

(viii) For the stabilizer plate test method, the minimum angle of pull to the horizontal is specified in the listing.

(b) *Standard test methods for establishing working load design values of ground anchor assemblies used for new manufactured home installations*—(1) *Scope*. (i) These testing procedures provide standard test methods for establishing both ultimate loads and load resistance design values.

(ii) Each assembly or component of an anchor assembly must be tested by the methods established by this section, and therefore be suitable, as listed or certified for installation in an appropriately classified soil, for installation of manufactured homes.

(iii) To secure approval of ground anchor assembly products and components, ground anchor manufacturers must have their products tested and listed by a nationally recognized testing laboratory, or tested and certified by an independent registered professional engineer.

(iv) The testing laboratory or independent registered engineer must be free from any conflict of interest from the product manufacturer and any of the product manufacturer's affiliates.

(2) *Definitions*. The definitions contained in this section apply to the terms used in subpart E of this part.

Allowable displacement limits. Criteria establishing the maximum amount of displacement of a material, assembly, or component under load.

Certification test site. A site used for the purpose of anchor assembly qualification testing in accordance with this section.

Cohesive soil. A soil with sufficient clay content to exhibit substantial plastic behavior when moist or wet (i.e., able to be readily molded or rolled into a ⅛ -inch thread at a wide range of moisture contents).

Ground anchor manufacturer. Any person or company engaged in manufacturing or importing ground anchor assemblies.

Non-Cohesive soil. Sand, gravel, and similar soils that are predominantly granular and lack a sufficient quantity of fine, clay-sized particles to exhibit the behavior of cohesive soil as defined in this section.

Ultimate anchor load. The lower of either the highest load achieved during an individual test prior to failure due to exceeding allowable displacement limits or the load at failure of the anchoring equipment or its attachment point to the testing apparatus.

Working anchor load. The ultimate anchor load in pounds divided by a factor of safety of 1.5.

(3) *Determination of soil classification*—(i) *General description of soil classification*. The general description of soil classification is to be determined in accordance with the methods specified in the Table to § 3285.202.

(ii) *Standards for identification of soil and soil classification*. The soil test torque probe method must be used at the certification test site for soil classification. At a minimum, the soil test torque probe must be used at three sample locations representative of the extent of the certification site test area. Soil characteristics must be measured at a depth below ground surface of not greater than the anchor helix depth and not less than ⅔ of the anchor helix depth for each ground anchor depth evaluated within the test area. The lowest torque probe value resulting in the highest soil classification number must be used. Additional guidance regarding the soil test torque probe method is available at the Appendix to this section and at § 3282.202.

(iii) *Classification in non-cohesive soils*. Ground anchor assemblies must be tested and listed or certified, and labeled for use in non-cohesive soil. Ground anchor assemblies are permitted to be tested, listed or certified, and labeled for use in cohesive soil.

(4) *Field testing apparatus*. (i) The testing equipment for conducting tests to list or certify a ground anchor assembly for use in a classified soil must

be capable of meeting the requirements of paragraph (b)(7) of this section as determined by the testing agency.

(ii) The testing equipment shall be calibrated to meet the testing requirements of paragraph (b)(7) of this section as determined by the testing agency.

(5) *Test specimens details and selection.* (i) Test specimens are to be examined by the independent testing, listing, or certifying entity for conformance with engineered drawings, specifications, and other information provided by the ground anchor manufacturer or producer including:

(A) Dimensions and specifications on all welds and fasteners;

(B) Dimensions and specifications of all metal or material;

(C) Model number and its location on the ground anchor; and

(ii) Necessary test specimens and products for the installed anchor assembly tests must be randomly selected by the independent testing, listing, or certifying entity.

(6) *Test requirements.* (i) Field tests must be performed on each anchor assembly installed in a classified soil as defined in paragraph (b)(3) of this section.

(ii) Field test apparatuses must be as specified in paragraph (b)(4) of this section, and must conform to the testing requirements of paragraph (b)(7) of this section.

(iii) Testing equipment shall be adequate for testing as determined by the testing agency.

NOTE TO PARAGRAPH (b)(6): As a recommended practice, the test rig soil reactions (bearing pads) should not be located closer to the center of the anchor assembly (anchor head) than the lesser of D, 4d, or 32 inches where D is the depth of the anchor helix and d is the diameter of the anchor helix, both in inches. However, experience with a particular test rig, types of anchors, and soil conditions may justify other acceptable dimensional tolerances.

(7) *Field tests of anchor assemblies.* (i) The soil characteristics at the certification test site must be identified and recorded according to paragraph (b)(3) of this section. The date, approximate time, and names of persons conducting and witnessing the anchor assembly tests must also be recorded at each certification test site.

(ii) Connection of the testing apparatus to the anchor assembly head must provide loading conditions to the anchor head, similar to actual site conditions. Adequacy of the connection must be determined by the testing agency or test engineer.

(iii) For soil classifications 3, 4A, and 4B, testing must be performed in the lower 50 percentile torque probe value of the soil classification being tested. For soil classifications 1 and 2 the torque probe value must not exceed 750 inch-pounds.

(iv) A minimum of three tests must be performed and the result of each test must meet or exceed 4,725 pounds pull (3,150 × 1.5 factor of safety) in the direction of pull.

(v) Special-purpose anchor assemblies, including those needed to accommodate unique design loads identified by manufacturers in their installation instructions, may be certified under this section or to more stringent requirements such as higher working loads, more restrictive anchor head displacements and/or tested angle limitations.

(vi) *Angle of pull.* Where the test apparatus configuration results in a changing angle of pull due to anchor assembly displacement during a lateral angle pull test, the angle of pull at the ultimate anchor load is to be recorded as the load angle for the test. Load angles are to be measured relative to the plane of the ground surface and shall be permitted to be rounded to the nearest 5-degree increment.

(vii) *Displacement measurement.* Vertical displacement (for all tests) and horizontal displacement (for lateral angle pull tests) must be measured relative to the centerline of the test apparatus' connection to the ground anchor assembly (anchor head) and the ground. A stable ground reference point for displacement measurements must be located independent of the test apparatus and not closer to the anchor assembly than the soil reaction points of the test apparatus. Displacement measurements shall be taken using a device with not less than ⅛-inch reading increments. Measurements shall be permitted to be rounded to the nearest ⅛-inch increment.

(8) *Anchor assembly field test methods.* (i) An anchor assembly must be tested in accordance with one or more of the assembly configurations addressed in paragraphs (b)(8)(iii), (iv) and (v) of this section. The as-tested configuration of any anchor assembly is a condition of the listing or certification. Alternate configurations are acceptable provided test conditions appropriately simulate actual end-use conditions and the as-tested configuration is addressed in the manufacturer's installation instructions.

(ii) Anchor assemblies designed for multiple connections to the manufactured home must be individually tested as specified in paragraphs (b)(8)(iii) and (iv) of this section.

(iii) Anchor assembly/stabilizer plate method. The following anchor assembly installation and testing must be consistently applied for all tests:

(A) The ground anchor is to be installed at an angle of 10–15 degrees from vertical to a depth of one-half (½) to two-thirds (⅔) of the anchor length.

(B) A stabilizer plate is to be driven vertically on the side of the ground anchor shaft facing the tensioning equipment three inches (3″) from the shaft and the top of the plate must be installed flush with the soil surface or not more than one inch below the soil surface.

(C) The ground anchor is to be driven to its full depth into the soil with the bottom of the anchor head not more than ¾ inch (¾″) above the stabilizer plate.

(D) The ground anchor head is to be attached to the tensioning equipment such that the tension load and displacement can be recorded. The tensioning equipment must be positioned to load the ground anchor and stabilizer plate at the minimum angle to the test site ground surface for which the anchor is being evaluated.

(E) The ground anchor is to be pretensioned to 500 pounds so that the anchor shaft contacts the stabilizer plate. If the anchor shaft does not come into contact with the stabilizer plate an anchor setting load not to exceed 1,000 pounds is permitted to be applied and then released prior to re-application of the 500-pound pre-tension force.

(F) The location of the ground anchor head is to be marked after it is pre-tensioned for measuring subsequent movement under test loading.

(G) Increase the load throughout the test. The recommended rate of load application must be such that the loading to not less than 4725 pounds is reached in not less than 2 minutes from the time the 500 pound pre-tension load is achieved.

(H) Record the load and displacement, at a minimum of 500–1000 pound increments, such that a minimum of five data points will be obtained to determine a load deflection curve. For each datum, the applied load and the ground anchor head displacement is to be recorded. In addition, the load and displacement is to be recorded at the Failure Mode identified in paragraph (b)(10) of this section. It is permissible to halt the addition of load at each loading increment for up to 60 seconds to facilitate taking displacement readings. The ultimate anchor load of the ground anchor assembly and corresponding displacement is to be recorded. The pre-tension load of 500 pounds should be included in the 4725 pound ultimate anchor load test. It is permissible to interpolate between displacement and load measurements to determine the ultimate anchor load.

(I) All ground anchor assemblies must be tested to the following:

(*1*) Failure due to displacement of the ground anchor assembly as established in paragraph (b)(9) of this section, or

(*2*) Failure of either the anchoring equipment or its attachment point to the testing apparatus, or to a minimum of 4725 pounds (when possible tests should be taken to 6000 pounds to provide additional data but this is not required).

(iv) Vertical in-line anchor assembly method. Anchor assembly installation and withdrawal procedures for test purposes are to be as follows, and be used consistently throughout all tests;

(A) The ground anchor must be installed vertically.

(B) The ground anchor must be driven to its full depth into the soil.

(C) The ground anchor head must be attached to the tensioning equipment such that the load and ground anchor head displacement can be recorded.

(D) The ground anchor must be pulled in line with the ground anchor shaft.

(E) The ground anchor shall be pre-tensioned to 500 pounds.

(F) The location of the ground anchor head must be marked after it is pre-tensioned for measuring subsequent movement under test loading.

(G) Increase the load throughout the test. The recommended rate of load application shall be such that the loading to not less than 4725 pounds is reached in not less than 2 minutes from the time the 500 pound pre-tension load is achieved.

(H) Record the load and displacement, at a minimum of 500–1000 pound increments, such that a minimum of five data points will be obtained to determine a load deflection curve. For each datum, the applied load and the ground anchor head displacement is to be recorded. In addition, the load and displacement is to be recorded at the Failure Mode identified in paragraph (b)(10) of this section. It is permissible to halt the addition of load at each loading increment for up to 60 seconds to facilitate taking displacement readings. The ultimate anchor load of the ground anchor assembly and corresponding displacement is to be recorded. The pre-tension load of 500 pounds should be included in the 4725 pound ultimate anchor load test. It shall be permissible to interpolate between displacement and load measurements to determine the Ultimate anchor load.

(I) All ground anchor assemblies must be tested to the following:

(*1*) Failure due to displacement of the ground anchor assembly as established in paragraph (b)(9) of this section, or

(*2*) Failure of either the anchoring equipment or its attachment point to the testing apparatus, or to a minimum of 4725 pounds (when possible tests should be taken to 6000 pounds to provide additional data but this is NOT required).

(v) In line ground anchor assembly method. Ground anchor assembly installation and withdrawal procedures for test purposes must be as follows, and must be used consistently throughout all tests.

(A) The ground anchor must be installed at an angle from the horizontal ground surface at which it is to be rated.

(B) The ground anchor must be driven to its full depth into the soil.

(C) The ground anchor head must be attached to the tensioning equipment such that tension and displacement can be recorded.

(D) The anchor must be pulled in line with the ground anchor shaft.

(E) The ground anchor shall be pre-tensioned 500 pounds.

(F) The location of the ground anchor head is to be marked after it is pre-tensioned for measuring subsequent movement under test loading.

(G) Increase the load throughout the test. The recommended rate of load application must be such that the loading to not less than 4725 pounds is reached in not less than 2 minutes from the time the 500 pound pre-tension load is achieved.

(H) Record the load and displacement, at a minimum of 500–1000 pound increments, such that a minimum of five data points will be obtained to determine a load deflection curve. For each datum, the applied load and the ground anchor head displacement is to be recorded. In addition, the load and displacement is to be recorded at the Failure Mode identified in paragraph (b)(10) of this section. It shall be permissible to halt the addition of load at each loading increment for up to 60 seconds to facilitate taking displacement readings. The ultimate anchor load of the ground anchor assembly and corresponding displacement must be recorded. The pre-tension load of 500 pounds should be included in the 4725 pound ultimate anchor load test. It is permissible to interpolate between displacement and load measurements to determine the Ultimate anchor load.

(I) All ground anchor assemblies must be tested to the following:

(*1*) failure due to displacement of the ground anchor assembly as established in paragraph (b)(9) of this section, or

(*2*) Failure of either the anchoring equipment or its attachment point to the testing apparatus, or to a minimum of 4725 pounds (when possible tests should be taken to 6000 pounds to

provide additional data but this is NOT required)

*Note to paragraph (*b*)(8)*. Additional testing at angles of pull greater than the minimum angle of pull may be used to provide design values for specific angles of pull greater than the minimum angle for which evaluation is sought.

(9) *Failure criteria*. The following conditions constitute failure of the ground anchor test assembly:

(i) When the ground anchor head, or its attachment point, displaces 2 inches in the vertical or horizontal direction from its pre-tensioned measurement position prior to reaching a total load of 3150 pounds (including any pretension load).

(ii) When the ground anchor head, or its attachment point, displaces 2 inches (2″) in the vertical direction or 3 inches (3″) in the horizontal direction from its pre-tensioned measurement position prior to reaching a total load of 4725 pounds (including any pretension load).

(iii) When breakage of any component of the ground anchor shaft occurs prior to reaching a total load of 4725 pounds.

(10) *Use of ultimate anchor loads to establish the working load design value*. (i) The working load design value is the lowest ultimate anchor load determined by testing, divided by a 1.5 factor of safety.

(ii) The working load design value, for each installation method and soil classification, shall be stated in the ground anchor assembly listing or certification. An anchor tested in a given soil classification number must not be approved for use in a higher/weaker soil classification number. For example an anchor tested in soil classification 3 must not be approved for soil classification 4A or 4B unless it is also tested in those soils. The 500 pound pre-tension is included in the ultimate anchor load.

(11) *Test report*. The test report to support the listing or certification for each ground anchor assembly tested is to include all conditions under which the ground anchor assembly was tested, including the following:

(i) A copy of all test data accumulated during the testing.

(ii) The soil characteristics including moisture content and methods for determining soil characteristics for each type of soil for which the ground anchoring assembly was evaluated.

(iii) The model of the ground anchor assembly tested.

(iv) The ground anchor assembly test method used.

(v) Detailed drawings including all dimensions of the ground anchor assembly and its components.

(vi) Method of installation at the test site.

(vii) Date of installation and date of testing.

(viii) Location of the certification test site.

(ix) Test equipment used.

(x) For each anchor specimen tested: For each load increment the load in pounds and resultant displacements in inches in chart or graph form.

(xi) The working load design value and ultimate anchor load determined in accordance with paragraph (b)(10) of this section.

(xii) If required, a description of the stabilizer plate used in each ground anchor assembly/stabilizer plate test, including the name of the manufacturer.

(xiii) Angle(s) of pull for which the anchor has been tested.

(xiv) Embedment depth of the ground anchor assembly.

(xv) The application and orientation of the applied load.

(xvi) A description of the mode and location of failure for each ground anchor assembly tested.

(xvii) Name and signature of the nationally recognized testing agency or registered professional engineer certifying the testing and evaluation.

(xviii) The soil classification(s) for which each ground anchor assembly is certified for use and the working load design value and minimum ultimate load capacity for those soil classification(s).

(12) *Approved ground anchor assemblies*. Each ground anchor manufacturer or producer must provide the following information for use of approved ground anchor assemblies and this information must also be included in the listing or certification for each ground anchor assembly:

(i) Drawings showing ground anchor installation.

(ii) Specifications for the ground anchor assembly including:

(A) Soils classifications listed or certified for use;

(B) The working load and minimum ultimate anchor load capacity for the anchor assembly in the soil classification(s) it is listed or certified for use;

(C) Model number and its location on the anchor;

(D) Instructions for use, including pre-tensioning;

(E) Angle(s) of pull for which the anchor has been listed and certified; and

(F) Manufacturer, size and type of stabilizer plate required.

(c) *Specifications for tie-down straps and ground anchors*—(1) *Ground anchors.* Ground anchors must be installed in accordance with their listing or certification, be installed to their full depth, be provided with protection against weather deterioration and corrosion at least equivalent to that provided by a coating of zinc on steel of not less than 0.30 oz./ft.^{2} of surface coated, and be capable of resisting a minimum ultimate load of 4,725 lbs. and a working load of 3,150 lbs., as installed, unless reduced capacities are noted in accordance with note 11 of Table 1 to this section or note 12 of Tables 2 and 3 to this section. The ultimate load and working load of ground anchors and anchoring equipment must be determined by a registered professional engineer, registered architect, or tested by a nationally recognized third-party testing agency in accordance with a nationally recognized testing protocol.

(2) *Tie-down straps.* A 1¼ inch × 0.035 inch or larger steel strapping conforming to ASTM D 3953—97, Standard Specification for Strapping, Flat Steel and Seals (incorporated by reference, see § 3285.4), Type 1, Grade 1, Finish B, with a minimum total capacity of 4,725 pounds (lbs.) and a working capacity of 3,150 pounds (lbs.) must be used. The tie-down straps must be provided with protection against weather deterioration and corrosion at least equivalent to that provided by a coating of zinc on steel of not less than 0.30 oz./ft.^{2} of surface coated. Slit or cut edges of coated strapping need not be zinc coated.

(d) *Number and location of ground anchors.* (1) Ground anchor and anchor strap spacing must be:

(i) No greater than the spacing shown in Tables 1 through 3 to this section and Figures A and B to this section; or

(ii) Designed by a registered engineer or architect, in accordance with acceptable engineering practice and the requirements of the MHCSS for any conditions that are outside the parameters and applicability of the Tables 1 through 3 to this section.

(2) The requirements in paragraph (c) of this section must be used to determine the maximum spacing of ground anchors and their accompanying anchor straps, based on the soil classification determined in accordance with § 3285.202:

(i) The installed ground anchor type and size (length) must be listed for use in the soil class at the site and for the minimum and maximum angle permitted between the diagonal strap and the ground; and

(ii) All ground anchors must be installed in accordance with their listing or certification and the ground anchor manufacturer installation instructions; and

(iii) If required by the ground anchor listing or certification, the correct size and type of stabilizer plate is installed. If metal stabilizer plates are used, they must be provided with protection against weather deterioration and corrosion at least equivalent to that provided by a coating of zinc on steel of not less than 0.30 oz./ft.2 of surface coated. Alternatively, ABS stabilizer plates may be used when listed and certified for such use.

(3) *Longitudinal anchoring.* Manufactured homes must also be stabilized against wind in the longitudinal direction in all Wind Zones. Manufactured homes located in Wind Zones II and III must have longitudinal ground anchors installed on the ends of the manufactured home transportable section(s) or be provided with alternative systems that are capable of resisting wind forces in the longitudinal direction. See Figure C to § 3285.402 for an example of one method that may be used to

provide longitudinal anchoring. A professional engineer or registered architect must certify the longitudinal anchoring method or any alternative system used as adequate to provide the required stabilization, in accordance with acceptable engineering practice.

Figure A to § 3285.402 Ground Anchor Locations and Spacing – Plan View.

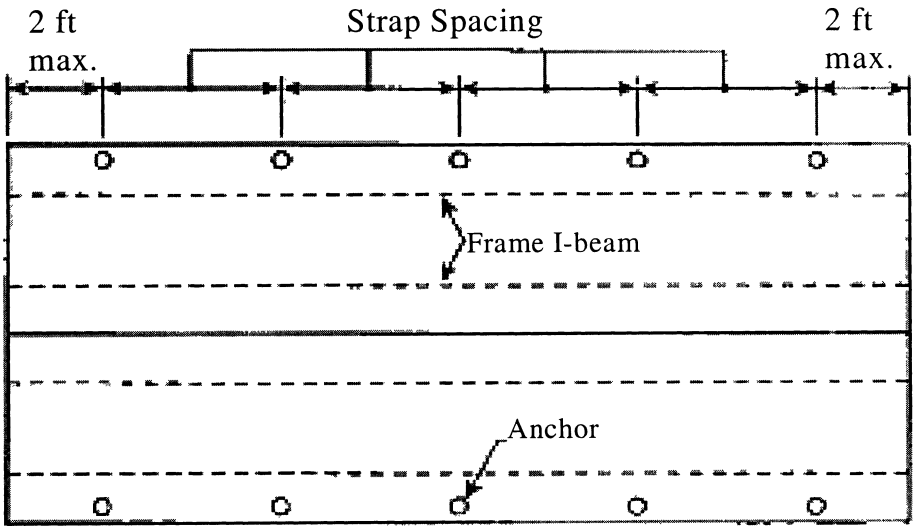

NOTES: 1. Refer to Tables 1, 2, and 3 to this section for maximum ground anchor spacing.

2. Longitudinal anchors not shown for clarity; refer to 3285.402(b)(2) for longitudinal anchoring requirements.

Figure B to § 3285.402 Anchor Strap and Pier Relationship.

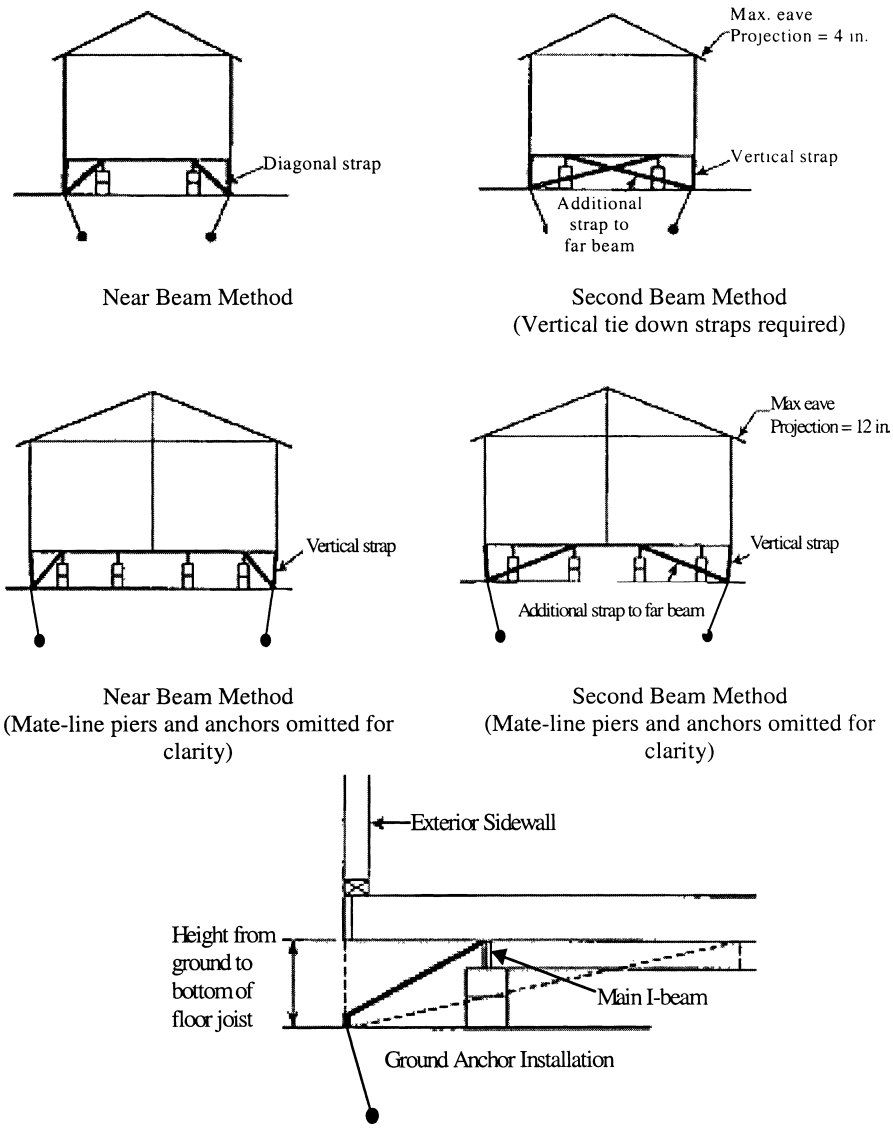

Near Beam Method

Second Beam Method
(Vertical tie down straps required)

Near Beam Method
(Mate-line piers and anchors omitted for clarity)

Second Beam Method
(Mate-line piers and anchors omitted for clarity)

NOTES: 1. Vertical Straps are not required in Wind Zone I.

2. The frame must be designed to prevent rotation of the main chassis beam, when the diagonal ties are not attached to the top flange of the beam. See § 3285.401(d)(3).

Figure C to § 3285.402 Longitudinal Anchoring

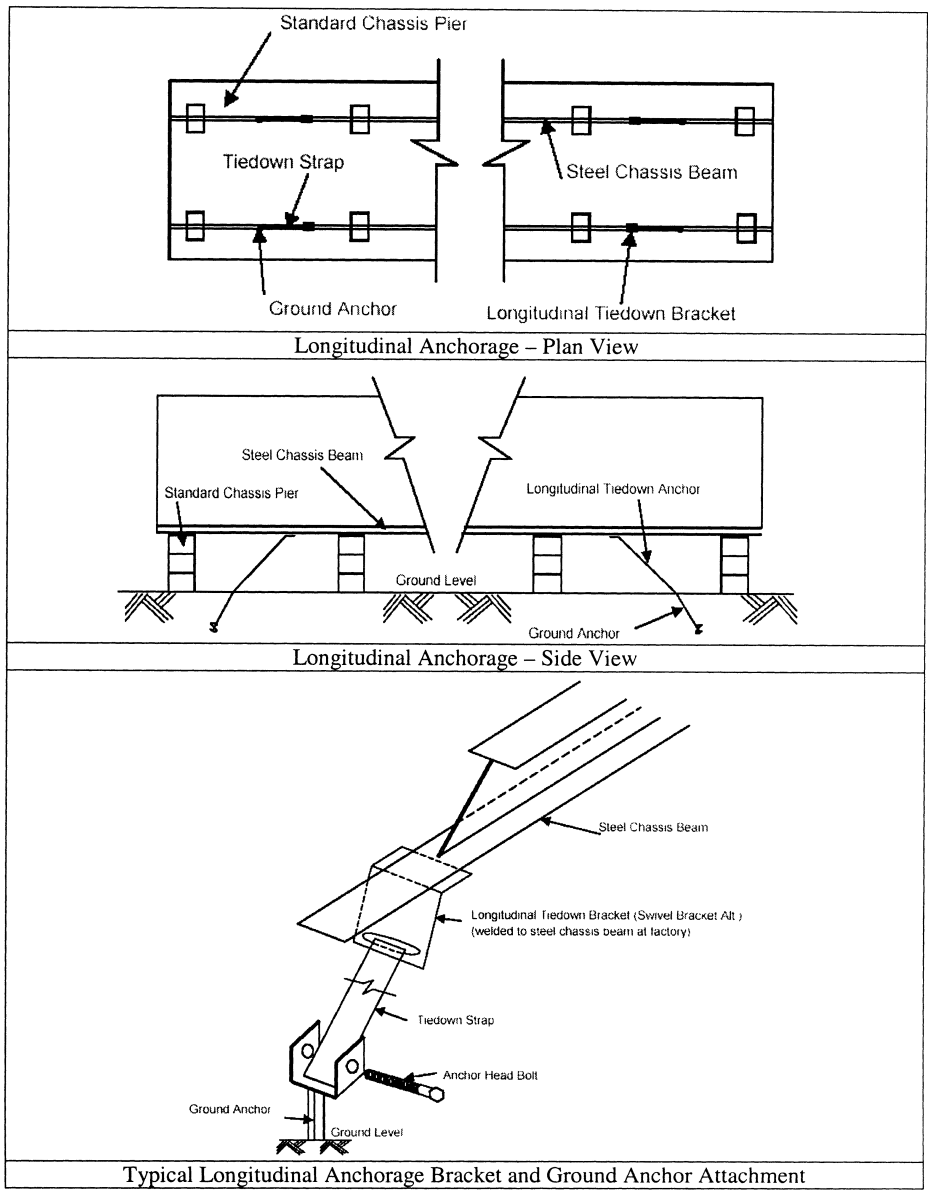

TABLE 1 TO § 3285.402—MAXIMUM DIAGONAL TIE-DOWN STRAP SPACING, WIND ZONE I

Nominal floor width, single section/multi-section	Max. heightfrom ground to diagonal strap attachment	I-beam spacing 82.5 in.	I-beamspacing 99.5 in.
12/24 ft. 144 in. nominal section(s)	25 in	14 ft. 2 in	N/A.
	33 in	11 ft. 9in	N/A.

TABLE 1 TO § 3285.402—MAXIMUM DIAGONAL TIE-DOWN STRAP SPACING, WIND ZONE I—Continued

Nominal floor width, single section/multi-section	Max. heightfrom ground to diagonal strap attachment	I-beam spacing 82.5 in.	I-beamspacing 99.5 in.
	46 in	9 ft. 1in	N/A.
	67 in	N/A	N/A.
14/28 ft. 168 in. nominal section(s)	25 in	18 ft. 2in	15 ft. 11 in.
	33 in	16 ft. 1 in	13 ft. 6 in.
	46 in	13 ft. 3 in	10 ft. 8in.
	67 in	10 ft. 0 in	N/A.
16/32 ft. 180 in. to 192 in. nominal section(s)	25 in	N/A	19 ft. 5in.
	33 in	19 ft. 0 in	17 ft. 5 in.
	46 in	16 ft. 5 in	14 ft. 7 in.
	67 in	13 ft. 1 in	11 ft. 3 in.

NOTES: 1. Table is based on maximum 90 in. sidewall height.

2. Table is based on maximum 4 in. inset for ground anchor head from edge of floor or wall.

3. Table is based on main rail (I-beam) spacing per given column.

4. Table is based on maximum 4 in. eave width for single-section homes and maximum 12 in. for multi-section homes.

5. Table is based on maximum 20-degree roof pitch (4.3/12).

6. Table is based upon the minimum height between the ground and the bottom of the floor joist being 18 inches. Interpolation may be required for other heights from ground to strap attachment.

7. Additional tie-downs may be required per the home manufacturer instructions.

8. Ground anchors must be certified for these conditions by a professional engineer, architect, or listed by a nationally recognized testing laboratory.

9. Ground anchors must be installed to their full depth, and stabilizer plates, if required by the ground anchor listing or certification, must also be installed in accordance with the listing or certification and in accordance with the ground anchor and home manufacturer instructions.

10. Strapping and anchoring equipment must be certified by a registered professional engineer or registered architect, or listed by a nationally recognized testing agency to resist these specified forces, in accordance with testing procedures in ASTM D 3953–97, Standard Specification for Strapping, Flat Steel and Seals (incorporated by reference, see § 3285.4).

11. A reduced ground anchor or strap working load capacity will require reduced tie-down strap and anchor spacing.

12. Ground anchors must not be spaced closer than the minimum spacing permitted by the listing or certification.

13. Table is based on a 3,150 lbs. working load capacity, and straps must be placed within 2 ft. of the ends of the home.

14. Table is based on a minimum angle of 30 degrees and a maximum angle of 60 degrees between the diagonal strap and the ground.

15. Table does not consider flood or seismic loads and is not intended for use in flood or seismic hazard areas. In those areas, the anchorage system is to be designed by a professional engineer or architect.

TABLE 2 TO § 3285.402—MAXIMUM DIAGONAL TIE-DOWN STRAP SPACING, WIND ZONE II.

Nominal floor width, single section/multi-section	Max. height from ground to diagonal strap attachment	Near beam method I–beam spacing		Second beam method I–beam spacing	
		82.5 in.	99.5 in.	82.5 in.	99.5 in.
12 ft/24 ft. 144 in. nominal section(s).	25 in	6 ft. 2 in	4 ft. 3 in	N/A	N/A
	33 in	5 ft. 2 in	N/A	N/A	N/A
	46 in	4 ft. 0 in	N/A	N/A	N/A
	67 in	N/A	N/A	6 ft 1 in	6 ft 3 in
14 ft/28 ft. 168 in. nominal section(s).	25 in	7 ft. 7 in	6 ft. 9 in	N/A	N/A
	33 in	6 ft. 10 in	5 ft. 9 in	N/A	N/A
	46 in	5 ft. 7 in	4 ft. 6 in	N/A	N/A
	67 in	4 ft. 3 in	N/A	N/A	N/A
16 ft/32 ft. 180 in. to 192 in. nominal section(s).	25 in	N/A	7 ft. 10 in	N/A	N/A

TABLE 2 TO § 3285.402—MAXIMUM DIAGONAL TIE-DOWN STRAP SPACING, WIND ZONE II.—Continued

Nominal floor width, single section/multi-section	Max. height from ground to diagonal strap attachment	Near beam method I–beam spacing		Second beam method I–beam spacing	
		82.5 in.	99.5 in.	82.5 in.	99.5 in.
	33 in	7 ft. 6 in	7 ft. 2 in	N/A	N/A
	46 in	6 ft. 9 in	6 ft. 0 in	N/A	N/A
	67 in	5 ft. 4 in	4 ft. 7 in	N/A	N/A

NOTES: 1. Table is based on maximum 90 in. sidewall height.

2. Table is based on maximum 4 in. inset for ground anchor head from edge of floor or wall.

3. Tables are based on main rail (I-beam) spacing per given column.

4. Table is based on maximum 4 in. eave width for single-section homes and maximum 12 in. for multi-section homes.

5. Table is based on maximum 20-degree roof pitch (4.3/12).

6. All manufactured homes designed to be located in Wind Zone II must have a vertical tie installed at each diagonal tie location.

7. Table is based upon the minimum height between the ground and the bottom of the floor joist being 18 inches. Interpolation may be required for other heights from ground to strap attachment.

8. Additional tie downs may be required per the home manufacturer instructions.

9. Ground anchors must be certified by a professional engineer, or registered architect, or listed by a nationally recognized testing laboratory.

10. Ground anchors must be installed to their full depth, and stabilizer plates, if required by the ground anchor listing or certification, must also be installed in accordance with the listing or certification and in accordance with the ground anchor and home manufacturer instructions.

11. Strapping and anchoring equipment must be certified by a registered professional engineer or registered architect or must be listed by a nationally recognized testing agency to resist these specified forces, in accordance with testing procedures in ASTM D 3953—97, Standard Specification for Strapping, Flat Steel and Seals (incorporated by reference, see § 3285.4).

12. A reduced ground anchor or strap working load capacity will require reduced tie-down strap and anchor spacing.

13. Ground anchors must not be spaced closer than the minimum spacing permitted by the listing or certification.

14. Table is based on a 3,150 lbs. working load capacity, and straps must be placed within 2 ft. of the ends of the home.

15. Table is based on a minimum angle of 30 degrees and a maximum of 60 degrees between the diagonal strap and the ground.

16. Table does not consider flood or seismic loads and is not intended for use in flood or seismic hazard areas. In those areas, the anchorage system is to be designed by a professional engineer or architect.

TABLE 3 TO § 3285.402—MAXIMUM DIAGONAL TIE-DOWN STRAP SPACING, WIND ZONE III.

Nominal floor width, single section/multi-section	Max. height from ground to diagonal strap attachment	Near beam method I-beam spacing		Second beam method I-beam spacing	
		82.5 in.	99.5 in.	82.5 in.	99.5 in.
12 ft./24 ft. 144 in. nominal section(s).	25 in	5 ft. 1 in	N/A	N/A	N/A
	33 in	4 ft. 3 in	N/A	N/A	N/A
	46 in	N/A	N/A	N/A	N/A
	67 in	N/A	N/A	N/A	N/A
14 ft./28 ft. 168 in. nominal section(s).	25 in	6 ft. 2 in.	5 ft. 7 in	N/A	N/A
	33 in	5 ft. 8 in	4 ft. 9 in	N/A	N/A
	46 in	4 ft. 8 in	N/A	N/A	N/A
	67 in	N/A	N/A	N/A	N/A
16 ft./32 ft. 180 in. to 192 in. nominal sections.	25 in	N/A	6 ft. 3 in	N/A	N/A
	33 in	6 ft. 1 in	5 ft. 11 in	N/A	N/A
	46 in	5 ft. 7 in	5 ft. 0 in	N/A	N/A
	67 in	4 ft. 5 in	N/A	N/A	N/A

NOTES: 1. Table is based on maximum 90 in. sidewall height.

2. Table is based on maximum 4 in. inset for ground anchor head from edge of floor or wall.

3. Table is based on main rail (I-beam) spacing per given column.

4. Table is based on maximum 4 in. eave width for single-section homes and maximum 12 in. for multi-section homes.

5. Table is based on maximum 20-degree roof pitch (4.3/12).

6. All manufactured homes designed to be located in Wind Zone III must have a vertical tie installed at each diagonal tie location.

7. Table is based upon the minimum height between the ground and the bottom of the floor joist being 18 inches. Interpolation may be required for other heights from ground to strap attachment.

8. Additional tie downs may be required per the home manufacturer instructions.

9. Ground anchors must be certified by a professional engineer, or registered architect, or listed by a nationally recognized testing laboratory.

10. Ground anchors must be installed to their full depth, and stabilizer plates, if required by the ground anchor listing or certification, must also be installed in accordance with the listing or certification and per the ground anchor and home manufacturer instructions.

11. Strapping and anchoring equipment must be certified by a registered professional engineer or registered architect or must be listed by a nationally recognized testing agency to resist these specified forces, in accordance with testing procedures in ASTM D 3953–97, Standard Specification for Strapping, Flat Steel and Seals (incorporated by reference, see § 3285.4).

12. A reduced ground anchor or strap working load capacity will require reduced tie-down strap and anchor spacing.

13. Ground anchors must not be spaced closer than the minimum spacing permitted by the listing or certification.

14. Table is based on a 3,150 lbs. working load capacity, and straps must be placed within 2 ft. of the ends of the home.

15. Table is based on a minimum angle of 30 degrees and a maximum angle of 60 degrees between the diagonal strap and the ground.

16. Table does not consider flood or seismic loads and is not intended for use in flood or seismic hazard areas. In those areas, the anchorage system is to be designed by a professional engineer or architect.

APPENDIX TO § 3285.402

Torque Probe Method for determining soil classification: This kit contains a 5-foot long steel earth-probe rod, with a helix at the end. It resembles a wood-boring bit on a larger scale. The tip of the probe is inserted as deep as the bottom helix of the ground anchor assembly that is being considered for installation. The torque wrench is placed on the top of the probe. The torque wrench is used to rotate the probe steadily so one can read the scale on the wrench. If the torque wrench reads 551 inch-pounds or greater, then a Class 2 soil is present according to the Table to 24 CFR 3285.202(a)(3). A Class 3 soil is from 351 to 550 inch-pounds. A Class 4A soil is from 276 to 350 inch-pounds, and a Class 4B soil is from 175 to 275 inch-pounds. When the torque wrench reading is below 175 inch-pounds, a professional engineer should be consulted.

[72 FR 59362, Oct. 19, 2007, as amended at 79 FR 53614, Sept. 10, 2014]

§ 3285.403 Sidewall, over-the-roof, mate-line, and shear wall straps.

If sidewall, over-the-roof, mate-line, or shear wall straps are installed on the home, they must be connected to an anchoring assembly.

§ 3285.404 Severe climatic conditions.

In frost-susceptible soil locations, ground anchor augers must be installed below the frost line, unless the foundation system is frost-protected to prevent the effects of frost heave, in accordance with acceptable engineering practice and § 3280.306 of this chapter and § 3285.312.

§ 3285.405 Severe wind zones.

When any part of a home is installed within 1,500 feet of a coastline in Wind Zones II or III, the manufactured home must be designed for the increased requirements, as specified on the home's data plate (refer to § 3280.5(f) of this chapter) in accordance with acceptable engineering practice. Where site or other conditions prohibit the use of the manufacturer's instructions, a registered professional engineer or registered architect, in accordance with acceptable engineering practice, must design anchorage for the special wind conditions.

§ 3285.406 Flood hazard areas.

Refer to § 3285.302 for anchoring requirements in flood hazard areas.

Subpart F—Optional Features

§ 3285.501 Home installation manual supplements.

Supplemental instructions for optional equipment or features must be approved by the DAPIA as not taking the home out of conformance with the requirements of this part, or part 3280 of this chapter, and included with the manufacturer installation instructions.

§ 3285.502 Expanding rooms.

The support and anchoring systems for expanding rooms must be installed in accordance with designs provided by the home manufacturer or prepared by a registered professional engineer or registered architect, in accordance with acceptable engineering practice.

§ 3285.503 Optional appliances.

(a) *Comfort cooling systems.* When not provided and installed by the home manufacturer, any comfort cooling systems that are installed must be installed according to the appliance manufacturer's installation instructions.

(1) *Air conditioners.* Air conditioning equipment must be listed or certified by a nationally recognized testing agency for the application for which the unit is intended and installed in accordance with the terms of its listing or certification (see § 3280.714 of this chapter).

(i) *Energy efficiency.* (A) Site-installed central air conditioning equipment must be sized to meet the home's heat gain requirement, in accordance with Chapter 28 of the 1997 ASHRAE Handbook of Fundamentals (incorporated by reference, see § 3285.4) or ACCA Manual J, Residential Cooling Load, 8th Edition (incorporated by reference, see § 3285.4). Information necessary to calculate the home's heat gain can be found on the home's comfort cooling certificate.

(B) The BTU/hr. rated capacity of the site-installed air conditioning equipment must not exceed the air distribution system's rated BTU/hr. capacity as shown on the home's compliance certificate.

(ii) *Circuit rating.* If a manufactured home is factory-provided with an exterior outlet to energize heating and/or air conditioning equipment, the branch circuit rating on the tag adjacent to this outlet must be equal to or greater than the minimum circuit amperage identified on the equipment rating plate.

(iii) *A-coil units.* (A) A-coil air conditioning units must be compatible and listed for use with the furnace in the home and installed in accordance with the appliance manufacturer's instructions.

(B) The air conditioner manufacturer instructions must be followed.

(C) All condensation must be directed beyond the perimeter of the home by means specified by the equipment manufacturer.

(2) *Heat pumps.* Heat pumps must be listed or certified by a nationally recognized testing agency for the application for which the unit is intended and installed in accordance with the terms of its listing or certification. (See § 3280.714 of this chapter).

(3) *Evaporative coolers.* (i) A roof-mounted cooler must be listed or certified by a nationally recognized testing agency for the application for which the unit is intended and installed in accordance with the terms of its listing (see § 3280.714 of this chapter).

(A) Any discharge grill must not be closer than three feet from a smoke alarm.

(B) Before installing a roof-mounted evaporative cooler on-site, the installer must ensure that the roof will support the weight of the cooler.

(C) A rigid base must be provided to distribute the cooler weight over multiple roof trusses to adequately support the weight of the evaporative cooler.

(ii) An evaporative cooler that is not roof-mounted is to be installed in accordance with the requirements of its listing or the equipment manufacturer's instructions, whichever is the more restrictive.

(b) *Fireplaces and wood-stoves.* When not provided by the home manufacturer, fireplaces and wood-stoves including chimneys and air inlets for fireplaces and wood stoves must be listed for use with manufactured homes and must be installed in accordance with their listings.

(c) *Appliance venting.* (1) All fuel burning heat producing appliances of

the vented type except ranges and ovens must be vented to the exterior of the home.

(2) Upon completion, the venting system must comply with all requirements of §§ 3280.707(b) and 3280.710 of the Manufactured Home Construction and Safety Standards in this chapter.

(3) When the vent exhausts through the floor, the vent must not terminate under the home and must extend to the home's exterior and through any skirting that may be installed.

(d) *Clothes dryer exhaust duct system.* A clothes dryer exhaust duct system must conform with and be completed in accordance with the appliance manufacturer instructions and § 3280.708 of this chapter. The vents must exhaust to the exterior of the home, beyond any perimeter skirting installed around it, as shown in Figure to § 3285.503.

Figure A to § 3285.503 Dryer Exhaust System.

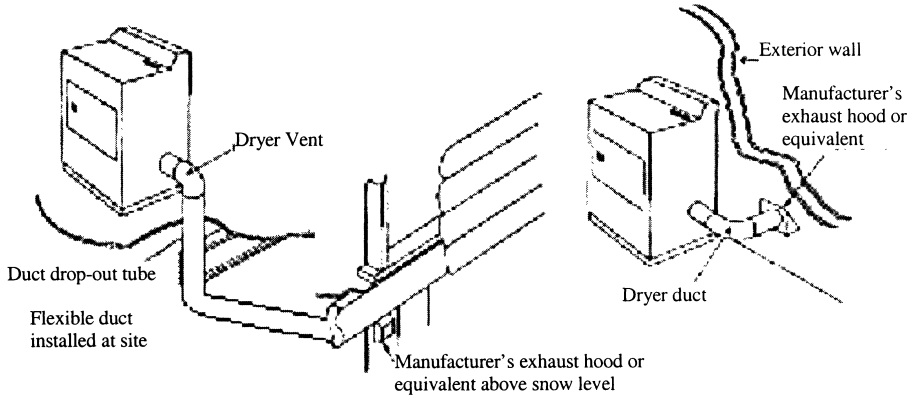

NOTES: 1. Installation of the exhaust system must be in accordance with the dryer manufacturer instructions.

2. Dryer exhaust system must not contain reverse slope or terminate under the home.

§ 3285.504 Skirting.

(a) Skirting, if used, must be of weather-resistant materials or provided with protection against weather deterioration at least equivalent to that provided by a coating of zinc on steel of not less than 0.30 oz./ft.^{2} of surface coated.

(b) Skirting must not be attached in a manner that can cause water to be trapped between the siding and trim or forced up into the wall cavities trim to which it is attached.

(c) All wood skirting within 6 inches of the ground must be pressure-treated in accordance with AWPA Standard U1 (incorporated by reference, see § 3285.4) for Use Category 4A, Ground Anchor Contact Applications, or be naturally resistant to decay and termite infestations.

(d) Skirting must not be attached in a manner that impedes the contraction and expansion characteristics of the home's exterior covering.

§ 3285.505 Crawlspace ventilation.

(a) A crawlspace with skirting must be provided with ventilation openings. The minimum net area of ventilation openings must not be less than one square foot (ft.^{2}) for every 150 square feet (ft.^{2}) of the home's floor area. The total area of ventilation openings may be reduced to one square foot (ft.^{2}) for every 1,500 square feet (ft.^{2}) of the home's floor area, where a uniform 6–mil polyethylene sheet material or

other acceptable vapor retarder is installed, according to § 3285.204, on the ground surface beneath the entire floor area of the home.

(b) Ventilation openings must be placed as high as practicable above the ground.

(c) Ventilation openings must be located on at least two opposite sides to provide cross-ventilation.

(d) Ventilation openings must be covered for their full height and width with a perforated corrosion and weather-resistant covering that is designed to prevent the entry of rodents. In areas subject to freezing, the coverings for the ventilation openings must also be of the adjustable type, permitting them to be in the open or closed position, depending on the climatic conditions.

(e) Access opening(s) not less than 18 inches in width and 24 inches in height and not less than three square feet (ft.^{2}) in area must be provided and must be located so that any utility connections located under the home are accessible.

(f) Dryer vents and combustion air inlets must pass through the skirting to the outside. Any surface water runoff from the furnace, air conditioning, or water heater drains must be directed away from under the home or collected by other methods identified in § 3285.203.

Subpart G—Ductwork and Plumbing and Fuel Supply Systems

§ 3285.601 Field assembly.

Home manufacturers must provide specific installation instructions for the proper field assembly of manufacturer-supplied and shipped loose ducts, plumbing, and fuel supply system parts that are necessary to join all sections of the home and are designed to be located underneath the home. The installation instructions must be designed in accordance with applicable requirements of part 3280, subparts G and H, of this chapter, as specified in this subpart.

§ 3285.602 Utility connections.

Refer to § 3285.904 for considerations for utility system connections.

§ 3285.603 Water supply.

(a) *Crossover*. Multi-section homes with plumbing in both sections require water-line crossover connections to join all sections of the home. The crossover design requirements are located in, and must be designed in accordance with, § 3280.609 of this chapter.

(b) *Maximum supply pressure and reduction*. When the local water supply pressure exceeds 80 psi to the manufactured home, a pressure-reducing valve must be installed.

(c) *Mandatory shutoff valve*. (1) An identified and accessible shutoff valve must be installed between the water supply and the inlet.

(2) The water riser for the shutoff valve connection must be located underneath or adjacent to the home.

(3) The shutoff valve must be a full-flow gate or ball valve, or equivalent valve.

(d) *Freezing protection*. Water line crossovers completed during installation must be protected from freezing. The freeze protection design requirements are located in, and must be designed in accordance with, § 3280.603 of this chapter.

(1) If subject to freezing temperatures, the water connection must be wrapped with insulation or otherwise protected to prevent freezing.

(2) In areas subject to freezing or subfreezing temperatures, exposed sections of water supply piping, shutoff valves, pressure reducers, and pipes in water heater compartments must be insulated or otherwise protected from freezing.

(3) *Use of pipe heating cable*. Only pipe heating cable listed for manufactured home use is permitted to be used, and it must be installed in accordance with the cable manufacturer installation instructions.

(e) *Testing procedures*. (1) The water system must be inspected and tested for leaks after completion at the site. The installation instructions must provide testing requirements that are consistent with § 3280.612 of this chapter.

(2) The water heater must be disconnected when using an air-only test.

§ 3285.604 Drainage system.

(a) *Crossovers.* Multi-section homes with plumbing in more than one section require drainage system crossover connections to join all sections of the home. The crossover design requirements are located in, and must be designed in accordance with, § 3280.610 of this chapter.

(b) *Assembly and support.* If portions of the drainage system were shipped loose because they were necessary to join all sections of the home and designed to be located underneath the home, they must be installed and supported in accordance with § 3280.608 of this chapter.

(c) *Proper slopes.* Drains must be completed in accordance with § 3280.610 of this chapter.

(1) Drain lines must not slope less than one-quarter inch per foot, unless otherwise noted on the schematic diagram, as shown in Figure to § 3285.604.

(2) A slope of one-eight inch per foot may be permitted when a clean-out is installed at the upper end of the run.

(d) *Testing procedures.* The drainage system must be inspected and tested for leaks after completion at the site. The installation instructions must provide testing requirements that are consistent with § 3280.612 of this chapter.

Figure A to § 3285.604 Drain Pipe Slope and Connections.

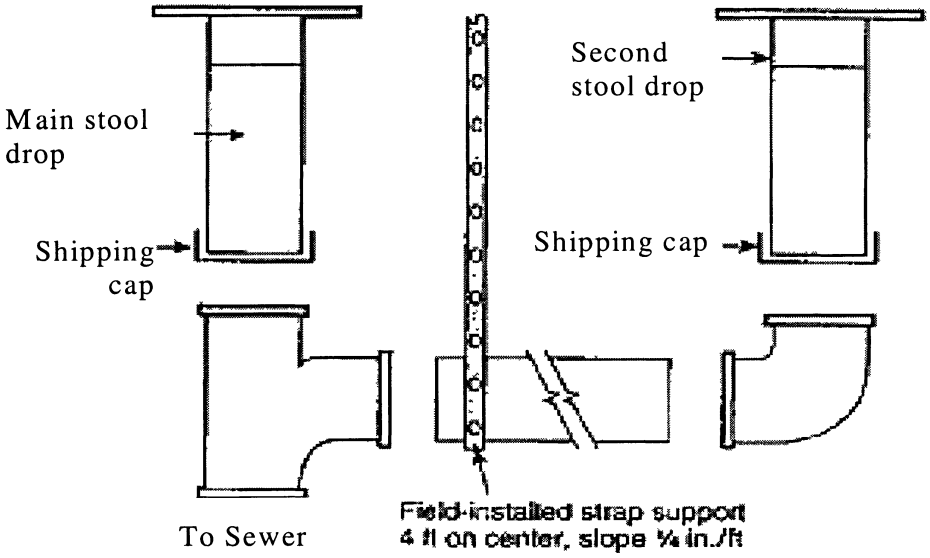

§ 3285.605 Fuel supply system.

(a) *Proper supply pressure.* The gas piping system in the home is designed for a pressure that is at least 7 inches of water column [4oz./in.^{2} or 0.25 psi] and not more than 14 inches of water column [8 oz./in.^{2} or 0.5 psi]. If gas from any supply source exceeds, or could exceed this pressure, a regulator must be installed if required by the LAHJ.

(b) *Crossovers.* (1) Multi-section homes with fuel supply piping in both sections require crossover connections to join all sections of the home. The crossover design requirements are located in, and must be designed in accordance with, § 3280.705 of this chapter.

(2) Tools must not be required to connect or remove the flexible connector quick-disconnect.

(c) *Testing procedures.* The gas system must be inspected and tested for leaks after completion at the site. The installation instructions must provide testing requirements that are consistent with § 3280.705 of this chapter.

§ 3285.606 Ductwork connections.

(a) Multi-section homes with ductwork in more than one section require crossover connections to complete the duct system of the home. All ductwork connections, including duct collars, must be sealed to prevent air leakage. Galvanized metal straps or tape and mastics listed to UL 181A (incorporated by reference, see § 3285.4), for closure systems with rigid air ducts and connectors, or UL 181B (incorporated by reference, see § 3285.4), for closure systems with flexible air ducts and connectors, must be used around the duct collar and secured tightly to make all connections.

(b) If metal straps are used, they must be secured with galvanized sheet metal screws.

(c) Metal ducts must be fastened to the collar with a minimum of three galvanized sheet metal screws equally spaced around the collar.

(d) Air conditioning or heating ducts must be installed in accordance with applicable requirements of the duct manufacturer installation instructions.

(e) The duct must be suspended or supported above the ground by straps or other means that are spaced at a maximum distance not to exceed 4′–0″ or as otherwise permitted by the installation instructions. When straps are used to support a flexible type duct, the straps must be at least ½″ wider than the spacing of the metal spirals encasing the duct. The ducts must be installed such that the straps cannot slip between any two spirals and arranged under the floor to prevent compression or kinking in any location, as shown in Figures A and B to this section. In-floor crossover ducts are permitted, in accordance with § 3285.606(g).

(f) Crossover ducts outside the thermal envelope must be insulated with materials that conform to designs consistent with part 3280, subpart F of this chapter.

(g) In-floor or ceiling crossover duct connections must be installed and sealed to prevent air leakage.

Figure A to §3285.606 – Crossover Duct Installation with Two Connecting Ducts.

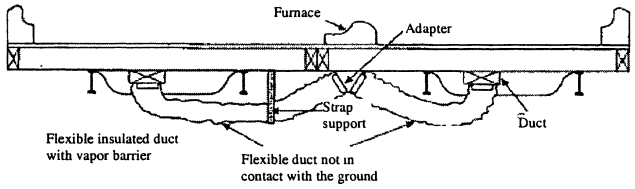

NOTES: 1. This system is typically used when a crossover duct has not been built into the floor and the furnace is outside the I–Beam. With this type of installation, it is necessary for two flexible ducts to be installed.

2. The crossover duct must be listed for exterior use.

Figure B to §3285.606 Crossover Duct Installation with One Connecting Duct.

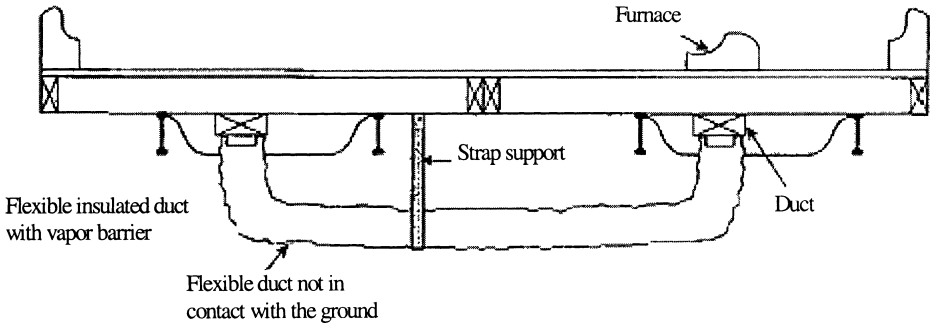

NOTES: 1. This system is typically used when a crossover duct has not been built into the floor and the furnace is situated directly over the main duct in one section of the home. A single flexible duct is then used to connect the two sections to each other.

2. The crossover duct must be listed for exterior use.

Subpart H—Electrical Systems and Equipment

§ 3285.701 Electrical crossovers.

Multi-section homes with electrical wiring in more than one section require crossover connections to join all sections of the home. The crossover must be designed in accordance with part 3280, subpart I of this chapter, and completed in accordance with the directions provided in the installation instructions.

§ 3285.702 Miscellaneous lights and fixtures.

(a) When the home is installed, exterior lighting fixtures, ceiling-suspended (paddle) fans, and chain-hung lighting fixtures are permitted to be installed in accordance with their listings and part 3280, subpart I of this chapter.

(b) *Grounding.* (1) All the exterior lighting fixtures and ceiling fans installed per § 3285.702(a) must be grounded by a fixture-grounding device or by a fixture-grounding wire.

(2) For chain-hung lighting fixtures, as shown in Figure A to this section, both a fixture-grounding device and a fixture-grounding wire must be used. The identified conductor must be the neutral conductor.

(c) Where lighting fixtures are mounted on combustible surfaces such as hardboard, a limited combustible or noncombustible ring, as shown in Figures A and B to this section, must be installed to completely cover the combustible surface exposed between the fixture canopy and the wiring outlet box.

(d) *Exterior lights.* (1) The junction box covers must be removed and wire-to-wire connections must be made using listed wire connectors.

(2) Wires must be connected black-to-black, white-to-white, and equipment ground-to-equipment ground.

(3) The wires must be pushed into the box, and the lighting fixture must be secured to the junction box.

(4) The lighting fixture must be caulked around its base to ensure a watertight seal to the sidewall.

(5) The light bulb must be installed and the globe must be attached.

(e) *Ceiling fans.* (1) Ceiling-suspended (paddle) fans must be connected to junction box listed and marked for ceiling fan application, in accordance with Article 314.27(b) of the National Electrical Code, NFPA No. 70–2005 (incorporated by reference, see § 3285.4); and

(2) The ceiling fan must be installed with the trailing edges of the blades at least 6 feet 4 inches above the finished floor; and

(3) The wiring must be connected in accordance with the product manufacturer installation instructions.

(f) *Testing*. (1) After completion of all electrical wiring and connections, including crossovers, electrical lights, and ceiling fans, the electrical system must be inspected and tested at the site, in accordance with the testing requirements of § 3280.810(b) of this chapter.

(2) The installation instructions must indicate that each manufactured home must be subjected to the following tests:

(i) An electrical continuity test to ensure that metallic parts are effectively bonded;

(ii) Operational tests of all devices and utilization equipment, except water heaters, electric ranges, electric furnaces, dishwashers, clothes washers/dryers, and portable appliances, to demonstrate that they are connected and in working order; and

(iii) For electrical equipment installed or completed during installation, electrical polarity checks must be completed to determine that connections have been made properly. Visual verification is an acceptable electrical polarity check.

Figure A to § 3285.702 Typical Installation of Chain-Hung Lighting Fixture.

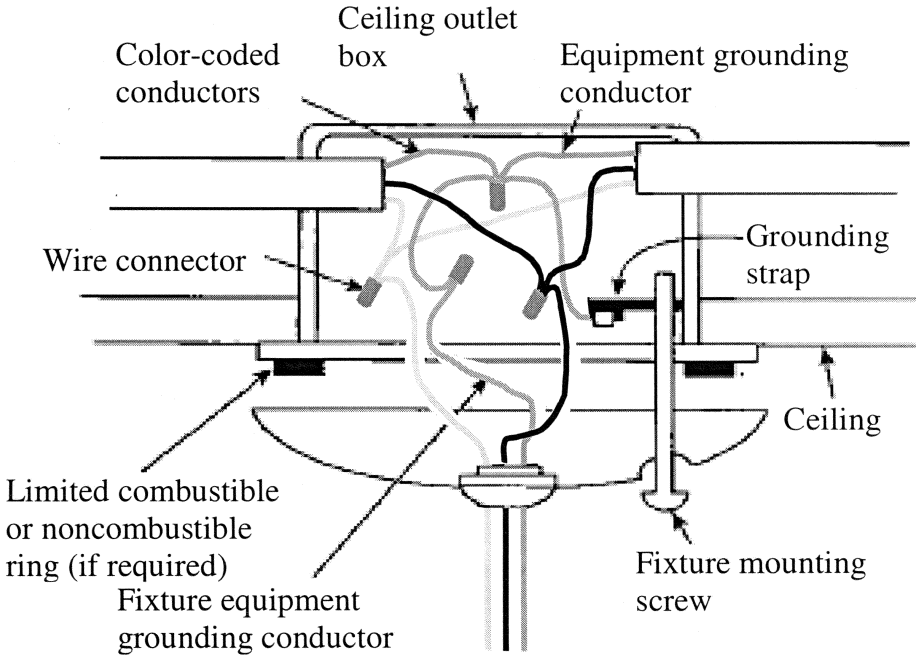

Figure B to § 3285.702 Typical Installation of Surface-Mounted Exterior Lighting Fixture.

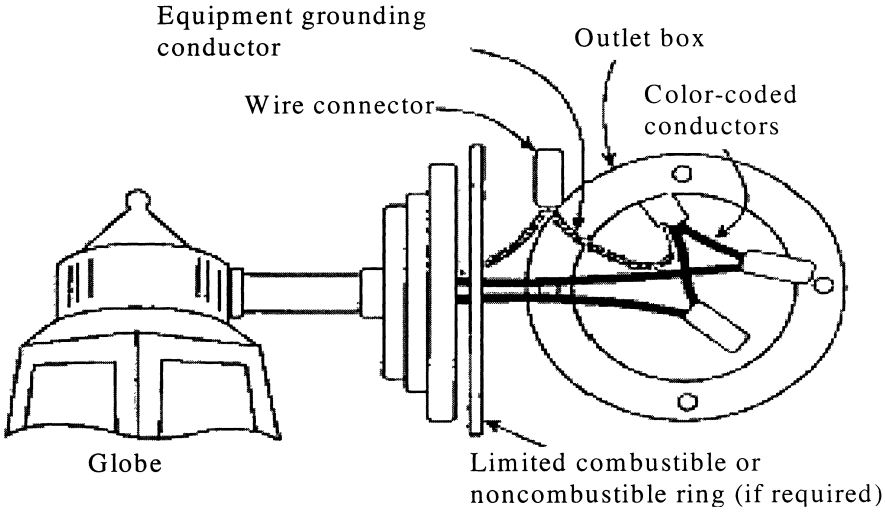

[72 FR 59362, Oct. 19, 2007; 72 FR 62308, Nov. 2, 2007]

§ 3285.703 Smoke alarms.

Smoke alarms must be functionally tested in accordance with applicable requirements of the smoke alarm manufacturer instructions and must be consistent with § 3280.208 of this chapter.

§ 3285.704 Telephone and cable TV.

Refer to § 3285.906 for considerations pertinent to installation of telephone and cable TV.

Subpart I—Exterior and Interior Close-Up

§ 3285.801 Exterior close-up.

(a) Exterior siding and roofing necessary to join all sections of the home must be installed according to the product manufacturer installation instructions and must be fastened in accordance with designs and manufacturer instructions, consistent with §§ 3280.305 and 3280.307 of this chapter. Exterior close-up strips/trim must be fastened securely and sealed with exterior sealant (see figure A to this section).

(b) *Joints and seams.* All joints and seams in exterior wall coverings that were disturbed during location of the home must be made weatherproof.

(c) Prior to installing the siding, the polyethylene sheeting covering exterior walls for transit must be completely removed.

(d) Prior to completing the exterior close-up, any holes in the roofing must be made weatherproof and sealed with a sealant or other material that is suitable for use with the roofing in which the hole is made.

(e) *Mate-line gasket.* The home manufacturer must provide materials and designs for mate-line gaskets or other methods designed to resist the entry of air, water, water vapor, insects, and rodents at all mate-line locations exposed to the exterior (see Figure B to this section).

(f) *Hinged roofs and eaves.* Hinged roofs and eaves must be completed during installation in compliance with all requirements of the Manufactured Home Construction and Safety Standards (24 CFR part 3280) and the Manufactured Home Procedural and Enforcement Regulations (24 CFR part 3282). Unless exempted by the following provisions, hinged roofs are also subject to a final inspection for compliance with

the Manufactured Home Construction and Safety Standards (24 CFR part 3280) by the IPIA or a qualified independent inspector acceptable to the IPIA. Homes with hinged roofs that are exempted from IPIA inspection are instead to be completed and inspected in accordance with the Manufactured Home Installation Program (24 CFR part 3286). This includes homes:

(1) That are designed to be located in Wind Zone I;

(2) In which the roof pitch of the hinged roof is less than 7:12, including designs incorporating peak cap construction or peak flip construction; and

(3) In which fuel burning appliance flue penetrations are not above the hinge.

FIGURE A to §3285.801 Installation of Field-Applied Horizontal Lap Siding

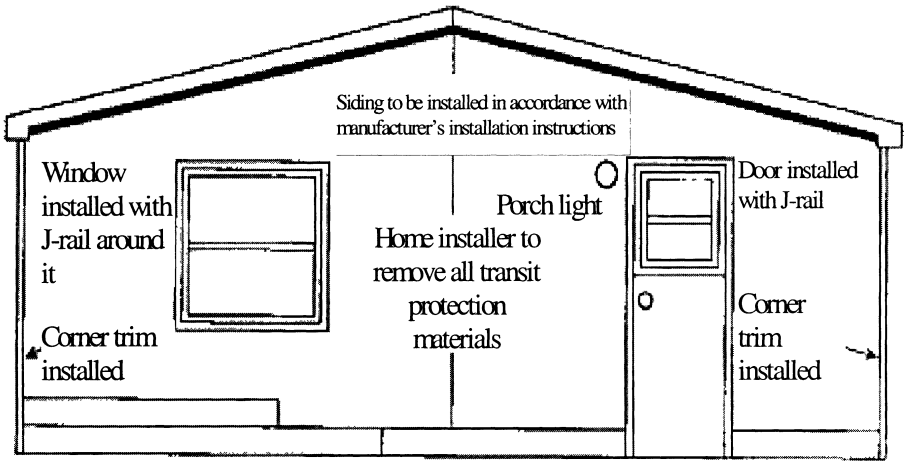

NOTES: 1. Multi-section homes with horizontal-lap siding can be shipped with no siding on the front and rear end walls.

2. The manufacturer must install doors/windows trimmed with J-rail or the equivalent and protect all exposed materials not designed for exposure to the weather with plastic sheeting for transport. Siding, starter trim, and vents may be shipped loose in the home for installation on set-up.

3. All home installers must ensure that all field installed trim, windows, doors, and other openings are properly sealed according to the siding manufacturer installation instructions.

Figure B to § 3285.801 Mate-Line Gasket.

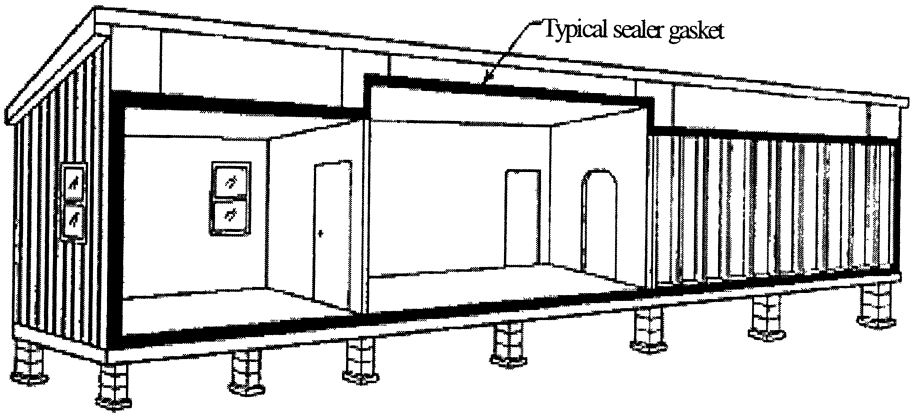

NOTE: On multi-section manufactured homes, install the sealer gasket on the ceiling, end walls, and floor mate-line prior to joining the sections together.

[72 FR 59362, Oct. 19, 2007, as amended at 80 FR 53731, Sept. 8, 2015]

§ 3285.802 Structural interconnection of multi-section homes.

(a) For multi-section homes, structural interconnections along the interior and exterior at the mate-line are necessary to join all sections of the home.

(b) Structural interconnection must be designed in accordance with the requirements located in § 3280.305 of this chapter to ensure a completely integrated structure.

(c) Upon completion of the exterior close-up, no gaps are permitted between the structural elements being interconnected along the mate-line of multi-section homes. However, prior to completion of the exterior close-up, gaps that do not exceed one inch are permitted between structural elements provided:

(1) The gaps are closed before completion of close-up;

(2) The home sections are in contact with each other; and

(3) The mating gasket is providing a proper seal. All such gaps must be shimmed with dimensional lumber, and fastener lengths used to make connections between the structural elements must be increased to provide adequate penetration into the receiving member.

§ 3285.803 Interior close-up.

(a) All shipping blocking, strapping, or bracing must be removed from appliances, windows, and doors.

(b) Interior close up items necessary to join all sections of the home or items subject to transportation damage may be packaged or shipped with the home for site installation.

(c) Shipped-loose wall paneling necessary for the joining of all sections of the home must be installed by using polyvinyl acetate (PVA) adhesive on all framing members and fastened with minimum 1½ inch long staples or nails at 6 inches on center panel edges and 12 inches on center in the field, unless alternative fastening methods are permitted in the installation instructions (see Figure A to § 3285.803).

FIGURE A to §3285.803 - Installation of Interior Field-Applied Panels.

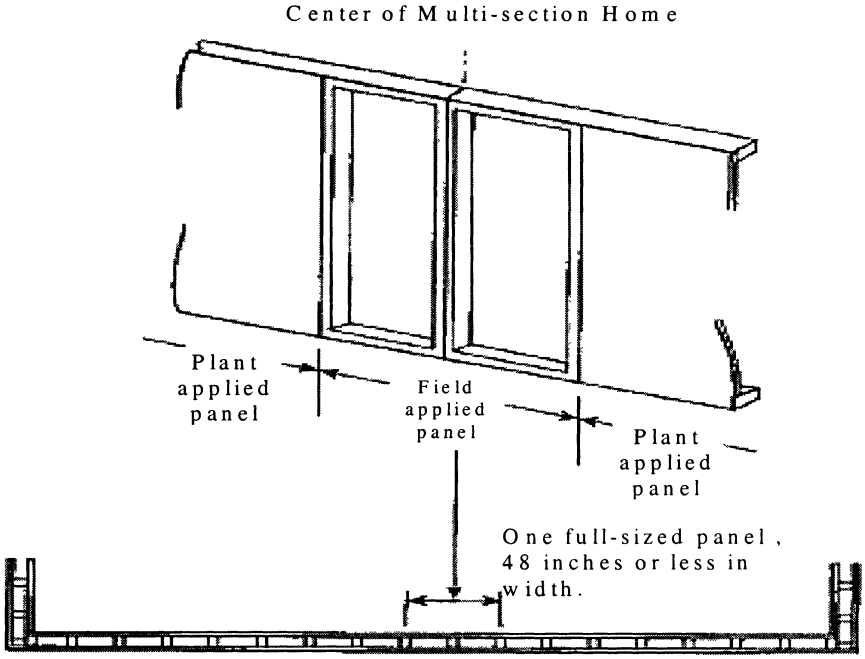

NOTE: Specific designs must be approved by a DAPIA and included in the home manufacturer installation instructions.

§3285.804 Bottom board repair.

(a) The bottom board covering must be inspected for any loosening or areas that might have been damaged or torn during installation or transportation. Any missing insulation is to be replaced prior to closure and repair of the bottom board.

(b) Any splits or tears in the bottom board must be resealed with tape or patches in accordance with methods provided in the manufacturers installation instructions.

(c) Plumbing P-traps must be checked to be sure they are well-insulated and covered.

(d) All edges of repaired areas must be taped or otherwise sealed.

Subpart J—Optional Information for Manufacturer's Installation Instructions

§3285.901 General.

The planning and permitting processes, as well as utility connection, access, and other requirements, are outside of HUD's authority and may be governed by LAHJs. These Model Installation Standards do not attempt to comprehensively address such requirements. However, HUD recommends that the manufacturer's installation instructions include the information and advisories in this Subpart J, in order to protect the manufactured home, as constructed in accordance with the MHCSS.

§3285.902 Moving manufactured home to location.

It is recommended that the installation instructions indicate that the LAHJ be informed before moving the manufactured home to the site. It is

also recommended that the installation instructions indicate that the manufactured home is not to be moved to the site until the site is prepared in accordance with subpart C of this part and when the utilities are available as required by the LAHJ. Examples of related areas that might be addressed in the installation instructions for meeting this recommendation include:

(a) *Access for the transporter.* Before attempting to move a home, ensure that the transportation equipment and home can be routed to the installation site and that all special transportation permits required by the LAHJ have been obtained.

(b) *Drainage structures.* Ditches and culverts used to drain surface runoff meet the requirements of the LAHJ and are considered in the overall site preparation.

§ 3285.903 Permits, alterations, and on-site structures.

It is recommended that the installation instructions include the following information related to permits, alterations, and on-site structures:

(a) *Issuance of permits.* All necessary LAHJ fees should be paid and permits should be obtained, which may include verification that LAHJ requirements regarding encroachments in streets, yards, and courts are obeyed and that permissible setback and fire separation distances from property lines and public roads are met.

(b) *Alterations.* Prior to making any alteration to a home or its installation, contact the LAHJ to determine if plan approval and permits are required.

(c) *Installation of on-site structures.* Each accessory building and structure is designed to support all of its own live and dead loads, unless the structure, including any attached garage, carport, deck, and porch, is to be attached to the manufactured home and is otherwise included in the installation instructions or designed by a registered professional engineer or registered architect.

§ 3285.904 Utility system connections.

(a) It is recommended that the manufacturer's installation instructions indicate the following procedures be used prior to making any utility system connection:

(1) Where an LAHJ and utility services are available, that the LAHJ and all utility services each be consulted before connecting the manufactured home to any utilities, or

(2) Where no LAHJ exists and utility services are available, that the utilities be consulted before connecting the manufactured home to any utility service; or

(3) In rural areas where no LAHJ or utility services are available, that a professional be consulted prior to making any system connections.

(b) *Qualified personnel.* Only qualified personnel familiar with local requirements are permitted to make utility site connections and conduct tests.

(c) *Drainage system.* The main drain line must be connected to the site's sewer hookup, using an elastomeric coupler or by other methods acceptable to the LAHJ, as shown in Figure A to this section.

(d) *Fuel supply system.* (1) *Conversion of gas appliances.* A service person acceptable to the LAHJ must convert the appliance from one type of gas to another, following instructions by the manufacturer of each appliance.

(2) *Orifices and regulators.* Before making any connections to the site supply, the inlet orifices of all gas-burning appliances must be checked to ensure they are correctly set up for the type of gas to be supplied.

(3) *Connection procedures.* Gas-burning appliance vents must be inspected to ensure that they are connected to the appliance and that roof jacks are properly installed and have not come loose during transit.

(4) *Gas appliance start-up procedures.* The LAHJ should be consulted concerning the following gas appliance startup procedures:

(i) One at a time, opening equipment shutoff valves, lighting pilot lights when provided, and adjusting burners and spark igniters for automatic ignition systems, in accordance with each appliance manufacturer instructions.

(ii) Checking the operation of the furnace and water heater thermostats.

Figure A to § 3285.904 – Connection to Site Sewer.

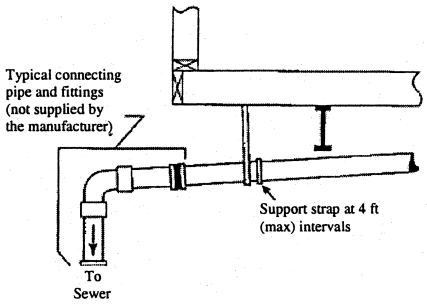

NOTE: Fittings in the drainage system that are subject to freezing, such as P-traps in the floor, are protected with insulation by the manufacturer. Insulation must be replaced if it is removed for access to the P-trap.

§ 3285.905 Heating oil systems.

It is recommended that the installation instructions include the following information related to heating oil systems, when applicable:

(a) Homes equipped with oil burning furnaces should have their oil supply tank and piping installed and tested on-site, in accordance with NFPA 31, Standard for the Installation of Oil Burning Equipment, 2001 (incorporated by reference, see § 3285.4) or the LAHJ, whichever is more stringent.

(b) The oil burning furnace manufacturer's instructions should be consulted for pipe size and installation procedures.

(c) Oil storage tanks and pipe installations should meet all applicable local regulations.

(d) *Tank installation requirements.* (1) The tank should be located where it is accessible to service and supply and where it is safe from fire and other hazards.

(2) In flood hazard areas, the oil storage tank should be anchored and elevated to or above the design flood elevation, or anchored and designed to prevent flotation, collapse, or permanent lateral movement during the design flood.

(3) *Leak test procedure.* Before the system is operated, it should be checked for leaks in the tank and supply piping, in accordance with NFPA 31, Standard for the Installation of Oil Burning Equipment, 2001 (incorporated by reference, see § 3285.4) or the requirements of the LAHJ, whichever is more stringent.

§ 3285.906 Telephone and cable TV.

It is recommended that the installation instructions explain that telephone and cable TV wiring should be installed in accordance with requirements of the LAHJ and the National Electrical Code, NFPA No. 70–2005 (incorporated by reference, see § 3285.4).

§ 3285.907 Manufacturer additions to installation instructions.

A manufacturer may include in its installation instructions items that are not required by this chapter as long as the items included by the manufacturer are consistent with the Model Installation Standards in this part and do not take the manufactured home out of compliance with the MHCSS.

PART 3286—MANUFACTURED HOME INSTALLATION PROGRAM

Subpart A—Generally Applicable Provisions and Requirements

Sec.
3286.1 Purpose.
3286.2 Applicability.
3286.3 Definitions.
3286.5 Overview of installation program.
3286.7 Consumer information.
3286.9 Manufacturer shipment responsibilities.
3286.11 Temporary storage of units.
3286.13 Waiver of rights invalid.