TETRA TECH

Received

MAY 18 2016

NYSDOS
Planning & Development

May 16, 2016

Denise Caldwell
New York State Department of State
Office of Planning and Development
Attn: Consistency Review Unit
Suite 1010
One Commerce Plaza, 99 Washington Avenue
Albany, NY 12231-0001

RE: National Fuel Gas Supply Corporation and Empire Pipeline, Inc. (National Fuel)
Northern Access 2016 Project
Federal Consistency Assessment Form
Blasdell Metalico Pipe Yard

Dear Ms. Caldwell:

On behalf of National Fuel Gas Supply Corporation ("Supply") and Empire Pipeline, Inc. ("Empire") (collectively "National Fuel"), enclosed please find a completed Federal Consistency Assessment Form for the proposed Northern Access 2016 Project ("Project"). The Project includes approximately 96.9 miles of new 24-inch diameter pipeline for natural gas transmission, from Sergeant Township, McKean County, Pennsylvania, to an interconnection with Supply's existing Line X-North, at Supply's existing Porterville Compressor Station in the Town of Elma, Erie County, New York. The Project also includes construction of a new compressor station, a new gas dehydration facility, and increased compression at an existing compressor station, and an approximately 2.1-mile pipeline (EMP-03 Pipeline).

Although none of the proposed Project facilities are located in the New York State Coastal Zone, an industrial area proposed for temporary use as a pipe storage yard is partly in the Coastal Zone. The proposed Blasdell Metalico Pipe Yard is partially located within the New York State Coastal Zone boundary on Lake Avenue in the Village of Blasdell, Erie County, New York (see attached figures). The site is zoned industrial and no permanent structures will be built on the site for the purpose of the Project. The only temporary modification to the site will be in the form of construction trailers that National Fuel will park there temporarily during construction. The pipe yard location is outside of the Hamburg Local Waterfront Revitalization Plan boundary. As such, only the State Coastal Policies apply to the site.

Tetra Tech Inc.
301 Ellicott Street, Buffalo, New York 14203
Tel 716.849.9419 Fax 716.849.9420 tetratech.com

Per the requirements of the Federal Consistency Assessment Form, please find enclosed an electronic copy (on CD) of the Section 401/404 Joint Application for Permit that was submitted to the New York State Department of Environmental Conservation and the U.S. Army Corps of Engineers on February 29, 2016.

If you have any questions or need additional information, please contact me at any time.

Sincerely,
Tetra Tech, Inc.

Sandra J Lare

Sandy Lare
Environmental Project Manager, Environmental Contractor Consultant to National Fuel

Enclosures: Federal Consistency Assessment Form
Project location figures in New York State Coastal Zone
Section 401/404 Joint Permit Application for Permit (on CD)

Cc (*electronic pdf files to*): Bruce Clark (National Fuel)

Received
MAY 18 2016
NYSDOS
Planning & Development

NEW YORK STATE DEPARTMENT OF STATE
COASTAL MANAGEMENT PROGRAM

Federal Consistency Assessment Form

An applicant, seeking a permit, license, waiver, certification or similar type of approval from a federal agency which is subject to the New York State Coastal Management Program (CMP), shall complete this assessment form for any proposed activity that will occur within and/or directly affect the State's Coastal Area. This form is intended to assist an applicant in certifying that the proposed activity is consistent with New York State's CMP as required by U.S. Department of Commerce regulations (15 CFR 930.57). It should be completed at the time when the federal application is prepared. The Department of State will use the completed form and accompanying information in its review of the applicant's certification of consistency.

A. **APPLICANT** (please print)

1. Name: National Fuel Gas Supply Corporation
2. Address: 1100 State Street, Erie, PA 16501-1912
3. Telephone: Area Code ( ) 814-871-8518

B. **PROPOSED ACTIVITY:**

1. Brief description of activity:

The Northern Access 2016 Project includes 96.9 miles of new 24-inch diameter pipeline for natural gas tranmission, 69 miles of which are in NY. A part of one temporary pipeyard is located within the NYS Coastal Zone in Blasdell, NY.

2. Purpose of activity:

The Blasdell Metalico Pipe Yard will be used as temporary pipe storage yard during the construction phase of the project.

3. Location of activity:

Erie	Blasdell	Lake Avenue
County	City, Town, or Village	Street or Site Description

4. Type of federal permit/license required: FERC Certificate, U.S. Army Corps Section 404

5. Federal application number, if known: FERC Docket No. CP15-115

6. If a state permit/license was issued or is required for the proposed activity, identify the state agency and provide the application or permit number, if known:

NYSDEC Article 15/24, Section 401 Water Quality Certificate

C. **COASTAL ASSESSMENT** Check either "YES" or "NO" for each of these questions. The numbers following each question refer to the policies described in the CMP document (see footnote on page 2) which may be affected by the proposed activity.

1. Will the proposed activity result in any of the following:	YES/NO
a. Large physical change to a site within the coastal area which will require the preparation of an environmental impact statement? (11, 22, 25, 32, 37, 38, 41, 43)	☐ ☑
b. Physical alteration of more than two acres of land along the shoreline, land under water or coastal waters? (2, 11, 12, 20, 28, 35, 44)	☐ ☑
c. Revitalization/redevelopment of a deteriorated or underutilized waterfront site? (1)	☐ ☑
d. Reduction of existing or potential public access to or along coastal waters? (19, 20)	☐ ☑
e. Adverse effect upon the commercial or recreational use of coastal fish resources? (9,10)	☐ ☑
f. Siting of a facility essential to the exploration, development and production of energy resources in coastal waters or on the Outer Continental Shelf? (29)	☐ ☑
g. Siting of a facility essential to the generation or transmission of energy? (27)	☐ ☑
h. Mining, excavation, or dredging activities, or the placement of dredged or fill material in coastal waters? (15, 35)	☐ ☑
i. Discharge of toxics, hazardous substances or other pollutants into coastal waters? (8, 15, 35)	☐ ☑
j. Draining of stormwater runoff or sewer overflows into coastal waters? (33)	☐ ☑
k. Transport, storage, treatment, or disposal of solid wastes or hazardous materials? (36, 39)	☐ ☑
l. Adverse effect upon land or water uses within the State's small harbors? (4)	☐ ☑

2. Will the proposed activity affect or be located in, on, or adjacent to any of the following:	YES/NO
a. State designated freshwater or tidal wetland? (44)	☐ ☑
b. Federally designated flood and/or state designated erosion hazard area? (11, 12, 17)	☐ ☑
c. State designated significant fish and/or wildlife habitat? (7)	☐ ☑
d. State designated significant scenic resource or area? (24)	☐ ☑
e. State designated important agricultural lands? (26)	☐ ☑
f. Beach, dune or Barrier Island? (12)	☐ ☑
g. Major ports of Albany, Buffalo, Ogdensburg, Oswego or New York? (3)	☐ ☑
h. State, county, or local park? (19, 20)	☐ ☑
i. Historic resource listed on the National or State Register of Historic Places? (23)	☐ ☑

3. Will the proposed activity require any of the following:	YES/NO
a. Waterfront site? (2, 21, 22)	☐ ☑
b. Provision of new public services or infrastructure in undeveloped or sparsely populated sections of the coastal area? (5)	☐ ☑
c. Construction or reconstruction of a flood or erosion control structure? (13, 14, 16)	☐ ☑
d. State water quality permit or certification? (30, 38, 40)	☐ ☑
e. State air quality permit or certification? (41, 43)	☐ ☑

4. Will the proposed activity occur within and/or affect an area covered by a State-approved local waterfront revitalization program, or State-approved regional coastal management program? (see policies in program document*)	☐ ☑

Received
MAY 18 2016
NYSDOS
Planning & Development

D. **ADDITIONAL STEPS**

1. If all of the questions in Section C are answered "NO", then the applicant or agency shall complete Section E and submit the documentation required by Section F.

2. If any of the questions in Section C are answered "YES", then the applicant or agent is advised to consult the CMP, or where appropriate, the local waterfront revitalization program document*. The proposed activity must be analyzed in more detail with respect to the applicable state or local coastal policies. On a separate page(s), the applicant or agent shall: (a) identify, by their policy numbers, which coastal policies are affected by the activity, (b) briefly assess the effects of the activity upon the policy; and, (c) state how the activity is consistent with each policy. Following the completion of this written assessment, the applicant or agency shall complete Section E and submit the documentation required by Section F.

E. **CERTIFICATION**

The applicant or agent must certify that the proposed activity is consistent with the State's CMP or the approved local waterfront revitalization program, as appropriate. If this certification cannot be made, the proposed activity shall not be undertaken. If this certification can be made, complete this Section.

"The proposed activity complies with New York State's approved Coastal Management Program, or with the applicable approved local waterfront revitalization program, and will be conducted in a manner consistent with such program."

Applicant/Agent's Name: Applicant: National Fuel Gas Supply Corp.; Agent: Sandy Lare, Tetra Tech, Inc.

Address: 301 Ellicott Street, Buffalo, NY 14203

Telephone: Area Code ( ) 716-849-9419

Applicant/Agent's Signature: Sandra Lare Date: May 16, 2016

F. **SUBMISSION REQUIREMENTS**

1. The applicant or agent shall submit the following documents to the **New York State Department of State, Office of Planning and Development, Attn: Consistency Review Unit, One Commerce Plaza-Suite 1010, 99 Washington Avenue, Albany, New York 12231.**

a. Copy of original signed form.
b. Copy of the completed federal agency application.
c. Other available information which would support the certification of consistency.

2. The applicant or agent shall also submit a copy of this completed form along with his/her application to the federal agency.

3. If there are any questions regarding the submission of this form, contact the Department of State at (518) 474-6000.

*These state and local documents are available for inspection at the offices of many federal agencies, Department of environmental Conservation and Department of State regional offices, and the appropriate regional and county planning agencies. Local program documents are also available for inspection at the offices of the appropriate local government.

20160727-4003 FERC PDF (Unofficial) 07/27/2016

Federal Energy Regulatory Commission

Office of Energy Projects

July 2016

National Fuel Gas Supply Corporation **Docket No. CP15-115-000**
Empire Pipeline, Inc. **CP15-115-001**

NORTHERN ACCESS 2016 PROJECT

Environmental Assessment

Cooperating Agencies:

NEW YORK STATE | Agriculture and Markets

U.S. Army Corps of Engineers

Washington, DC 20426

20160727-4003 FERC PDF (Unofficial) 07/27/2016

FEDERAL ENERGY REGULATORY COMMISSION
WASHINGTON, D.C. 20426

OFFICE OF ENERGY PROJECTS

In Reply Refer To:
OEP/DG2E/Gas 2
National Fuel Gas Supply Corporation
Empire Pipeline, Inc.
Northern Access 2016 Project
Docket Nos. CP15-115-000
CP15-115-001

TO THE PARTY ADDRESSED:

The staff of the Federal Energy Regulatory Commission (FERC or Commission) has prepared an environmental assessment (EA) for the Northern Access 2016 Project, proposed by National Fuel Gas Supply Corporation and Empire Pipeline, Inc. (National Fuel) in the above-referenced dockets. National Fuel requests authorization to construct, operate, and maintain about 99 miles of natural gas transmission pipeline and related facilities in McKean County, Pennsylvania and Allegany, Cattaraugus, Erie, and Niagara Counties, New York. The Project would provide 350,000 dekatherms per day of capacity to markets in the northeastern United States and Canada.

The EA assesses the potential environmental effects of the construction and operation of the Northern Access 2016 Project in accordance with the requirements of the National Environmental Policy Act (NEPA). The FERC staff concludes that approval of the proposed project, with appropriate mitigating measures, would not constitute a major federal action significantly affecting the quality of the human environment.

The U.S. Army Corps of Engineers and New York State Department of Agriculture and Markets participated as cooperating agencies in the preparation of the EA. Cooperating agencies have jurisdiction by law or special expertise with respect to resources potentially affected by the proposal and participate in the NEPA analysis.

The proposed Northern Access 2016 Project includes the following facilities:

- 96.9 miles of 24-inch-diameter pipeline in McKean County, Pennsylvania and Allegany, Cattaraugus, and Erie Counties, New York;
- 0.9 mile of 16-inch-diameter pipeline and 1.2 miles of 24-inch-diameter pipeline in Niagara County, New York;

20160727-4003 FERC PDF (Unofficial) 07/27/2016

- a new 22,000 horsepower (hp) compressor station in Niagara County;
- an additional 5,000 hp of compression at an existing compressor station in Erie County;
- a metering, regulation, and delivery station in Erie County;
- a dehydration facility in Niagara County;
- tie-ins in McKean, Cattaraugus, and Erie Counties;
- modification of tie-in facilities in Niagara County;
- mainline block valves in McKean, Allegany, Cattaraugus, and Erie Counties; and
- access roads and contractor/staging yards in McKean, Allegany, Cattaraugus, and Erie Counties.

The FERC staff mailed copies of the EA to federal, state, and local officials; agency representatives; conservation organizations; local libraries and newspapers; Native American groups; property owners affected by the Project facilities; and parties to this proceeding. In addition, the EA is available for public viewing on the FERC's website (www.ferc.gov) using the eLibrary link. A limited number of copies of the EA are available for distribution and public inspection at:

Federal Energy Regulatory Commission
Public Reference Room
888 First Street NE, Room 2A
Washington, DC 20426
(202) 502-8371

Any person wishing to comment on the EA may do so. Your comments should focus on the potential environmental effects, reasonable alternatives, and measures to avoid or lessen environmental impacts. The more specific your comments, the more useful they will be. To ensure that the Commission has the opportunity to consider your comments prior to making its decision on this project, it is important that we receive your comments in Washington, DC on or before **August 26, 2016.**

20160727-4003 FERC PDF (Unofficial) 07/27/2016

For your convenience, there are three methods you can use to file your comments with the Commission. In all instances please reference the project docket number (CP15-115-000 or CP15-115-001) with your submission. The Commission encourages electronic filing of comments and has expert staff available to assist you at 202-502-8258 or efiling@ferc.gov.

(1) You can file your comments electronically using the eComment feature located on the Commission's website (www.ferc.gov) under the link to Documents and Filings. This is an easy method for submitting brief, text-only comments on a project;

(2) You can also file your comments electronically using the eFiling feature on the Commission's website (www.ferc.gov) under the link to Documents and Filings. With eFiling, you can provide comments in a variety of formats by attaching them as a file with your submission. New eFiling users must first create an account by clicking on "eRegister." You must select the type of filing you are making. If you are filing a comment on a particular project, please select "Comment on a Filing"; or

(3) You can file a paper copy of your comments by mailing them to the following address:

Kimberly D. Bose, Secretary
Federal Energy Regulatory Commission
888 First Street NE, Room 1A
Washington, DC 20426

Any person seeking to become a party to the proceeding must file a motion to intervene pursuant to Rule 214 of the Commission's Rules of Practice and Procedures (18 CFR 385.214).[1] Only intervenors have the right to seek rehearing of the Commission's decision. The Commission grants affected landowners and others with environmental concerns intervenor status upon showing good cause by stating that they have a clear and direct interest in this proceeding which no other party can adequately represent. **Simply filing environmental comments will not give you intervenor status, but you do not need intervenor status to have your comments considered.**

---

[1] See the previous discussion on the methods for filing comments.

20160727-4003 FERC PDF (Unofficial) 07/27/2016

Additional information about the project is available from the Commission's Office of External Affairs, at **(866) 208-FERC,** or on the FERC website (www.ferc.gov) using the eLibrary link. Click on the eLibrary link, click on "General Search," and enter the docket number excluding the last three digits in the Docket Number field (i.e., CP15-115). Be sure you have selected an appropriate date range. For assistance, please contact FERC Online Support at FercOnlineSupport@ferc.gov or toll free at (866) 208-3676, or for TTY, contact (202) 502-8659. The eLibrary link also provides access to the texts of formal documents issued by the Commission, such as orders, notices, and rulemakings.

In addition, the Commission offers a free service called eSubscription which allows you to keep track of all formal issuances and submittals in specific dockets. This can reduce the amount of time you spend researching proceedings by automatically providing you with notification of these filings, document summaries, and direct links to the documents. Go to www.ferc.gov/docs-filing/esubscription.asp.

20160727-4003 FERC PDF (Unofficial) 07/27/2016

National Fuel Gas and Empire Pipeline Company
NORTHERN ACCESS 2016 PROJECT

TABLE OF CONTENTS

A. PROPOSED ACTION 1
1. INTRODUCTION 1
2. PROJECT PURPOSE AND NEED 2
3. PUBLIC REVIEW AND COMMENT 2
4. PROPOSED FACILITIES 5
a. Pipeline Facilities 7
b. Aboveground Facilities 7
c. Access Roads and Staging/Contractor Yards 9
5. LAND REQUIREMENTS 10
6. CONSTRUCTION SCHEDULE AND WORKFORCE 11
7. CONSTRUCTION, OPERATIONS, AND MAINTENANCE PROCEDURES 11
a. General Pipeline Construction Procedures 11
b. Special Pipeline Construction Procedures 14
c. Aboveground Facility Construction Procedures 17
d. Environmental Compliance Inspection and Monitoring 17
e. Operation and Maintenance 19
8. PERMITS, APPROVALS, AND CONSULTATIONS 19
B. ENVIRONMENTAL ANALYSIS 22
1. GEOLOGY AND SOILS 22
a. Geology 22
b. Soils 29
2. WATER RESOURCES 34
a. Groundwater Resources 34
b. Surface Water Resources 40
c. Wetland Resources 47
3. VEGETATION 54
a. Exotic or Invasive Species 55
b. Sensitive Vegetation Communities 55
c. Impacts and Mitigation 55
4. FISHERIES AND WILDLIFE 59
a. Fisheries 59
b. Wildlife 64
c. Migratory Birds 69
d. Threatened, Endangered, and Special Status Species 72
5. LAND USE AND VISUAL RESOURCES 83
a. Land Use 83
b. Coastal Zone Management Areas 90
c. Planned Developments 90
d. Airports 90
e. Visual Resources 91
6. CULTURAL RESOURCES 92
7. SOCIOECONOMICS 97
a. Population and Employment 97

b. Housing ... 99
c. Public Services ... 99
d. Transportation ... 99
e. Property Values ... 100
f. Economy and Tax Revenues ... 101
g. Environmental Justice ... 101
8. AIR QUALITY AND NOISE ... 102
a. Air Quality ... 102
b. Noise and Vibration ... 118
9. RELIABILITY AND SAFETY ... 128
a. Safety Standards ... 129
b. Pipeline Accident Data ... 134
c. Impact on Public Safety ... 136
10. CUMULATIVE IMPACTS ... 139
a. Soils and Geology ... 142
b. Water Resources ... 143
c. Vegetation, Fisheries, Wildlife, and Threatened, Endangered, and Special Status Species ... 146
d. Land Use, Recreation, Special Interest Areas, and Visual Resources ... 150
e. Socioeconomics ... 153
f. Cultural Resources ... 154
g. Air Quality ... 154
h. Noise ... 157
i. Climate Change ... 158
C. ALTERNATIVES ... 161
1. NO-ACTION ALTERNATIVE ... 162
2. SYSTEM ALTERNATIVES ... 162
3. MAJOR ROUTE ALTERNATIVES ... 162
4. ROUTE VARIATIONS ... 165
5. ABOVEGROUND FACILITY ALTERNATIVES ... 165
D. CONCLUSIONS AND RECOMMENDATIONS ... 177
E. REFERENCES ... 185
F. LIST OF PREPARERS ... 200

LIST OF APPENDICES

Appendix A	Pipeline Route, Aboveground Facilities, Access Roads, and Staging/Contractor Yards Maps
Appendix B	MP Location, Existing Land Use, and Approximate Length and Width of the Project Access Roads
Appendix C	Typical Right-Of-Way Configurations Proposed by National Fuel
Appendix D	Erosion and Sediment Control & Agricultural Mitigation Plan
Appendix E	Waterbody and Wetland Crossing Tables
Appendix F	Site-Specific Plans for Residences within 25 Feet of the Construction Workspace
Appendix G	Projects Considered for Cumulative Impacts with the Proposed Project

20160727-4003 FERC PDF (Unofficial) 07/27/2016

LIST OF TABLES

Table A.3-1 Primary Issues Identified During the Public Scoping Process 3
Table A.4.a-1 Proposed Pipeline Facilities 7
Table A.5-1 Summary of Land Requirements 10
Table A.7.b-2 Public Roads, Highways, and Railroads Crossed by Horizontal Directional Drill 16
Table A.8-1 State and Federal Permits, Approvals, and Consultations 20
Table B.1.b-1 Summary of Soil Characteristics 31
Table B.2.a-1 Source Water Assessment Zones or Wellhead Protection Areas Crossed 36
Table B.2.a-2 Private Water Supply Wells within 150 Feet of the Project 36
Table B.2.b-1 Waterbodies Crossed by Horizontal Direction Drill 44
Table B.2.b-2 Hydrostatic Test Water Source and Discharge Locations 46
Table B.2.b-3 Water Required for Horizontal Directional Drills 46
Table B.2.c-1 Summary of Wetlands Affected by Construction and Operation 50
Table B.2.c-2 Additional Temporary Workspace in Wetlands Not Justified 53
Table B.3-1 Vegetation Cover Types 54
Table B.3.c-1 Vegetation Communities Affected 56
Table B.4.a-1 Fisheries of Special Concern 61
Table B.4.b-1 Common Wildlife Species Potentially Occurring in the Project Area 65
Table B.4.c-1 Land Birds of Conservation Concern in the Southeastern Coastal Plain Region 70
Table B.4.d-1 Federally Listed Threatened and Endangered Species 73
Table B.4.d-2 State-Listed Threatened, Endangered, and Special Concern Species Potentially Occurring in the Project Area 78
Table B.5.a-1 Acres of Land Affected by Construction and Operation 84
Table B.5.a-2 Residences within 50 feet of the Project 86
Table B.6-1 Areas Remaining for Phase I Archaeological Survey 93
Table B.7.a-1 Existing Economic Conditions 98
Table B.7.c-1 Existing Public Services in the Counties Crossed 99
Table B.7.f-1 Annual Ad Valorem and Property Taxes Associated with the Project 101
Table B.7.g-1 Demographics and Low Income Populations in the Project Area 102
Table B.8.a-1 Monitored Ambient Air Quality Data from the Project Area 104
Table B.8.a-2 Major Stationary Source and Prevention of Significant Deterioration Emission Thresholds 105
Table B.8.a-3 Major Stationary Source and Nonattainment New Source Review Emission Thresholds 107
Table B.8.a-4 Summary of Construction Emissions 112
Table B.8.a-5 Summary of Potential-to-Emit Emissions for the Modified Porterville Compressor Station 114
Table B.8.a-6 Summary of Potential-to-Emit Emissions for the Pendleton Compressor Station and Wheatfield Dehydration Facility 114
Table B.8.a-7 Summary of Potential-to-Emit Emissions for the Proposed Pipeline Equipment 115
Table B.8.a-8 Operational Fugitive Methane Emissions 115
Table B.8.a-9 Summary of Potential-to-Emit Emissions for Hazardous Air Pollutants 116
Table B.8.a-10 Results of NAAQS Dispersion Modeling 117

20160727-4003 FERC PDF (Unofficial) 07/27/2016

Table B.8.a-11 Results of NYSDEC Air Toxics Dispersion Modeling 117
Table B.8.b-1 Construction Noise Analysis..... 119
Table B.8.b-2 Summary of the Closest NSAs to the HDD Entry and Exit Points 120
Table B.8.b-3 HDD Noise Analysis at the Closest NSA 120
Table B.8.b-4 Site-Specific HDD Noise Mitigation Measures for the Northern Access 2016 Project 122
Table B.8.b-5 Porterville Compressor Station Noise Analysis..... 123
Table B.8.b-6 X-N Pressure Reduction Station Noise Analysis..... 124
Table B.8.b-7 TGP 200 Interconnect Station Noise Analysis 125
Table B.8.b-8 Pendleton Compressor Station Noise Analysis..... 125
Table B.8.b-9 Wheatfield Dehydration Facility Noise Analysis 126
Table B.8.b-10 Hinsdale Meter Station Noise Analysis 127
Table B.9.b-1 Natural Gas Transmission Pipeline Significant Incidents by Cause..... 135
Table B.9.b-2 Outside Forces Incidents by Cause 136
Table B.9.c-1 Annual Average Fatalities – Natural Gas Transmission Pipelines 137
Table B.9.c-2 Nationwide Accidental Deaths 137
Table C.3-1 Major Route Alternative Comparison Table..... 164
Table C.5-1 Comparison of Pendleton Compressor Station Site Alternatives 168

20160727-4003 FERC PDF (Unofficial) 07/27/2016

LIST OF FIGURES

Figure A.4-1 Project Overview Map 6
Figure A.7.a-1 Typical Pipeline Construction Sequence 12
Figure B.2.a-1 Aquifers Within the Project Area for the Northern Access 2016 Project..... 37
Figure B.5.e-1 Rendering of the Proposed Pendleton Compressor Station 92
Figure C.3-1 Major Route Alternatives..... 163
Figure C.5-1 Compressor Station Alternative Site #1..... 169
Figure C.5-2 Compressor Station Alternative Site #2..... 170
Figure C.5-3 Compressor Station Alternative Site #3..... 171

20160727-4003 FERC PDF (Unofficial) 07/27/2016

TECHNICAL ACRONYMS

°F	degrees Fahrenheit
ACHP	Advisory Council on Historic Preservation
APE	area of potential effect
ATWS	additional temporary workspace
BACT	Best Available Control Technology
BCC	Birds of Conservation Concern
CAA	Clean Air Act of 1970
CEQ	Council on Environmental Quality
Certificate	Certificate of Public Convenience and Necessity
CFR	Code of Federal Regulations
CH_4	methane
CO	carbon monoxide
CO_2	carbon dioxide
CO_2e	carbon dioxide equivalent
Commission	Federal Energy Regulatory Commission
dB	decibels
dBA	decibels on the A-weighted scale
DOT	U.S. Department of Transportation
EA	environmental assessment
EI	environmental inspectors
EIS	environmental impact statement
Empire	Empire Pipeline, Inc.
EPA	U.S. Environmental Protection Agency
ESA	Endangered Species Act
ESCAMP	Erosion and Sediment Control & Agricultural Mitigation Plan
FEMA	Federal Emergency Management Agency
FERC	Federal Energy Regulatory Commission
FWS	U.S. Fish and Wildlife Service
GCOC	Gas Control and Operations Center
GHG	greenhouse gas
gpm	gallons per minute
GWP	Global Warming Potential
HAP	hazardous air pollutants
HCA	high consequence area
HDD	horizontal directional drill
hp	horsepower
IBA	Important Bird Area
IPCC	Intergovernmental Panel on Climate Change
L_{dn}	day-night sound level
L_{eq}	equivalent sound level
LiDAR	Light Detection and Ranging
M&R	metering and regulating
MAOP	maximum allowable operating pressure
MLV	mainline valve
MMBtu/hr	million metric British Thermal Units

20160727-4003 FERC PDF (Unofficial) 07/27/2016

TECHNICAL ACRONYMS (cont'd)

MP	milepost
msl	mean sea level
N_2O	nitrous oxide
NAAQS	National Ambient Air Quality Standards
National Fuel	National Fuel Gas Supply Corporation (including subsidiaries National Fuel and Empire)
NEPA	National Environmental Policy Act of 1969
NGA	Natural Gas Act
NHPA	National Historic Preservation Act
NNSR	Nonattainment New Source Review
NO_x	nitrogen oxides
NPS	National Park Service
NRCS	Natural Resources Conservation Service
NRHP	National Registry of Historic Places
NSA	noise sensitive area
NSPS	New Source Performance Standards
NYNHP	New York Natural Heritage Program
NYSDAM	New York State Department of Agriculture and Markets
NYSDEC	New York State Department of Environmental Conservation
OEP	Office of Energy Projects
PADCNR	Pennsylvania Department of Conservation and Natural Resources
PADEP	Pennsylvania Department of Environmental Protection
PFBC	Pennsylvania Fish and Boat Commission
PGA	peak horizontal ground accelerations
PGC	Pennsylvania Game Commission
PHMSA	Pipeline and Hazardous Materials Safety Administration
Plan	*Upland Erosion Control, Revegetation, and Maintenance Plan*
PM_{10}	Particulate Matter 10 Microns or Less
$PM_{2.5}$	Particulate Matter 2.5 Microns or Less
Procedures	*Wetland and Waterbody Construction and Mitigation Procedures*
Project	Northern Access 2016 Project
PSD	Prevention of Significant Deterioration
RICE	reciprocating internal combustion engine
ROI	region of influence
SHPO	State Historic Preservation Office
SO_2	sulfur dioxide
SSURGO	Soil Survey Geographic
TGP	Tennessee Gas Pipeline
tpy	tons per year
USACE	U.S. Army Corps of Engineers
USGCRP	U.S. Global Change Research Program
USGS	U.S. Geological Survey
VOC	volatile organic compound

A. PROPOSED ACTION

1. Introduction

On March 19, 2015, National Fuel Gas Supply Corporation (National Fuel) and Empire Pipeline, Inc. (Empire), both subsidiaries of National Fuel Gas Company (collectively known as National Fuel) filed an application with the Federal Energy Regulatory Commission (Commission or FERC) in Docket No. CP15-115-000 for a Certificate of Public Convenience and Necessity (Certificate) under Section 7(c) of the Natural Gas Act (NGA) for construction, operation, and maintenance of a natural gas transmission pipeline and related facilities in McKean County, Pennsylvania and Allegany, Cattaraugus, Erie, and Niagara Counties, New York. National Fuel's project, referred to as the Northern Access 2016 Project (Project), would consist of new pipeline facilities, new and modified compression facilities, and other ancillary facilities. On November 2, 2015, National Fuel filed an amendment to its application due to modifications to the proposed project in Niagara County. The Commission assigned Docket No. CP15-115-001 to the Project to accommodate the amendment. The Project is being reviewed under both docket numbers.

We[1] prepared this environmental assessment (EA) in compliance with the requirements of the National Environmental Policy Act of 1969 (NEPA), the Council on Environmental Quality (CEQ) regulations for implementing NEPA (Title 40 of the Code of Federal Regulations, Parts 1500-1508 [40 CFR 1500-1508]), and the Commission's implementing regulations under Chapter 1 of 18 CFR 380. Consistent with NEPA or their respective responsibilities, the U.S. Army Corps of Engineers (USACE) and the New York State Department of Agriculture and Markets (NYSDAM) are cooperating agencies[2] in the preparation of this EA.

The assessment of environmental impacts is an important and integral part of the FERC's decision on whether to issue National Fuel a Certificate to construct and operate the proposed facilities. Our principal purposes in preparing this EA are to:

- identify and assess potential impacts on the natural and human environment that would result from implementation of the proposed action;
- assess reasonable alternatives to the proposed action that would avoid or minimize adverse effects to the environment; and
- identify and recommend specific mitigation measures, as necessary, to minimize environmental impacts.

[1] "We," "us," and "our" refer to the environmental staff of the Office of Energy Projects.

[2] A cooperating agency is an agency that participates in the preparation of the NEPA document to satisfy its NEPA responsibilities related to a project or due to special expertise in the project area or resources affected by the project.

2. Project Purpose and Need

According to National Fuel, the Project would provide incremental firm transportation to markets in the northeastern United States and Canada through National Fuel and Empire's existing interconnections, including Empire's interconnection with TransCanada Pipeline at Chippawa (a receipt point), as well as markets on the Tennessee Gas 200 Line in Erie County, New York, and other interconnections with local gas distribution companies, power generators, and other interstate pipelines available on both the National Fuel and Empire systems. The Project would create approximately 350,000 dekatherms per day of capacity to these market areas. National Fuel and Empire each held Open Seasons for the Project from June 3 to June 26, 2014, and executed a long-term binding agreement with Seneca Resources Corporation for 100 percent of the firm transportation capacity.

Under Section 7(c) of the NGA, the Commission determines whether interstate natural gas transportation facilities are in the public convenience and necessity and, if so, grants a Certificate to construct and operate them. The Commission bases its decisions on technical competence, financing, rates, market demand, gas supply, environmental impact, long-term feasibility, and other issues concerning a proposed project.

3. Public Review and Comment

On July 24, 2014, FERC granted National Fuel's request to use the Commission's pre-filing environmental review process (pre-filing process) in Docket No. PF14-18-000. The pre-filing process was established to encourage early involvement by citizens, governmental entities, non-governmental organizations, and other interested parties in the development of planned natural gas transmission projects. During the pre-filing process, FERC staff worked with National Fuel and interested stakeholders, including federal and state agencies, to identify and resolve Project-related issues.

National Fuel hosted three public open houses in Olean, Franklinville, and Sardinia, New York on May 20, 21, and 28, 2014, respectively, to inform stakeholders about the Project and to provide an opportunity for stakeholders to ask questions and express their comments and concerns. On August 26, 27, and 28, 2014, National Fuel held additional public open houses in Olean, Sardinia, and North Tonawanda, New York, respectively. We attended the August open houses and participated in a field visit of the project area with National Fuel staff.

On October 22, 2014, the Commission issued a *Notice of Intent to Prepare an Environmental Assessment for the Planned Northern Access 2016 Project, Request for Comments on Environmental Issues, and Notice of Public Scoping Meetings*. This notice was published in the Federal Register and was mailed to the environmental mailing list, which consists of federal, state, and local officials; agency representatives; conservation organizations; local libraries and newspapers; Native American groups; and property owners potentially affected by the project facilities. Written comments were requested from the public on specific concerns about the Project that should be considered during preparation of the EA.

We conducted two scoping meetings on November 3 and 5, 2014, in St. Bonaventure and Springville, New York. One person in St. Bonaventure and one person in Springville provided verbal comments.

On April 29, 2015, in response to changes to the project facilities in Niagara County, specifically the proposed Pendleton Compressor Station and Dehydration Facility locations, the Commission issued a *Supplemental Notice of Intent to Prepare an Environmental Assessment, Request for Comments on Environmental Issues, Notice of Environmental Site Review, and Notice of Public Scoping Meeting*. This notice was mailed to the environmental mailing list. We received approximately 460 comments in response to this notice.

On May 20, 2015, we held an additional scoping meeting in North Tonawanda, New York due to the newly identified aboveground facility sites in Niagara County, New York. Over 300 people attended the meeting and approximately 40 people provided verbal comments.

On November 22, 2015, the Commission issued another Supplemental Notice of Intent to solicit additional input from the public regarding an amended location of the Pendleton Compressor Station. This notice was mailed to the environmental mailing list. Since that notice, we have received approximately 170 comments.

The transcripts of the scoping meetings and written scoping comments are part of the public record for the Project and are available for viewing on the FERC Internet website (http://www.ferc.gov).[3] Table A.3-1 summarizes the issues raised during scoping and the section of the EA where the comment is addressed.

TABLE A.3-1

Primary Issues Identified During the Public Scoping Process

Comment / Concern	Environmental Assessment Section Addressing Comment
Purpose and need of the Project	Section A.2
Impacts on water resources	Section B.2
Invasive plant species	Section B.3.a
Impacts on protected species	Section B.4
Impacts on existing land use, including parks and recreation	Section B.5
Proximity to residences	Section B.5.a
Property values	Section B.6.e
Potentially significant cultural resources	Section B.7
Emissions and noise from aboveground facilities	Section B.8
Health and safety of residences near aboveground facilities	Section B.9
Utilization of alternative pipeline routes and alternative aboveground facility sites	Sections C.3 and C.4

[3] Using the "eLibrary" link, select "General Search" from the eLibrary menu and enter the docket number excluding the last three digits in the "Docket Number" field (i.e. PF14-18); be sure to select an appropriate date range. The pre-fling process concluded on March 17, 2015, following National Fuel's filing of its formal application. The proceedings for the Project are currently being conducted under Docket Numbers CP15-115-000 and CP15-115-001.

Request for an Environmental Impact Statement

We received several comments during the scoping process requesting that an environmental impact statement (EIS), rather than an EA, be prepared to assess the impact of the Project. An EA is a concise environmental document which a federal agency is responsible for that serves to provide sufficient evidence and analysis for determining a finding of no significant impact. The Commission's regulations under 18 CFR 306(b) state: "If the Commission believes that a proposed action … may not be a major federal action significantly affecting the quality of the human environment, an EA, rather than an EIS, will be prepared first. Depending on the outcome of the EA, an EIS may or may not be prepared." In preparing this EA, we are fulfilling our obligation under NEPA to consider and disclose the environmental impacts of the Project. As noted above, this EA addresses the impacts that could occur on a wide range of resources should the Project be approved and constructed. Also, the USACE and NYSDAM have special expertise with respect to certain environmental impacts associated with National Fuel's proposal and assisted in preparing this EA. Based on our analysis, the extent and content of comments received during the scoping period, and considering that the project facilities would be largely co-located with existing facilities, we conclude in section D that the impacts associated with this Project can be sufficiently mitigated to support a finding of no significant impact and, thus, an EA is warranted.

We also received comments from the Allegheny Defense Project and several individuals regarding the potential indirect and cumulative effects associated with production of natural gas from shale formations by hydraulic fracturing ("fracking"). Our authority under the NGA relates only to natural gas facilities that are involved in interstate commerce. The permitting of gas extraction, including fracking, is under the jurisdiction of the state agencies where those facilities are located. Thus, the facilities associated with the production of natural gas are not under FERC jurisdiction. CEQ regulations require agencies to consider the indirect impacts of proposed actions. Indirect impacts are "caused by the proposed action" and occur later in time or farther removed in distance than direct project impacts, but are still "reasonably foreseeable."[4] For an agency to include consideration of an impact in its NEPA analysis as an indirect effect, approval of the proposed project and the related secondary effect must be causally related.

We find no causal link between natural gas production and the proposed project. A causal relationship would only exist if the proposed pipeline would transport new production from a specified production area and that production would not occur in the absence of the proposed pipeline. Therefore, natural gas production and hydraulic fracturing are not considered in this EA as an indirect effect of the proposed action.

CEQ defines "cumulative impact" as "the impact on the environment which results from the incremental impact of the action [being studied] when added to other past, present, and reasonably foreseeable future actions…."[5] Consistent with CEQ guidance, in order to determine the scope of a cumulative impacts analysis for a project, Commission staff establishes a "region of influence" in which various resources may be affected by a proposed project and other past, present, and reasonably foreseeable future actions. As part of our analysis of cumulative impacts

[4] 40 CFR §1508.8(b) (2015).

[5] 40 CFR §1508.7 (2015).

in section B.10 of this EA, we did not identify any natural gas production projects within the region of influence (ROI) for any resource analyzed with regards to the proposed project.

4. Proposed Facilities

The proposed project consists of the following facilities:

- 96.9 miles of 24-inch-diameter pipeline in McKean County, Pennsylvania and Allegany, Cattaraugus, and Erie Counties, New York;
- 0.9 mile of 16-inch-diameter pipeline and 1.2 miles of 24-inch-diameter pipeline in Niagara County, New York;
- a new 22,000 horsepower (hp) compressor station in Niagara County;
- an additional 5,000 hp of compression at an existing compressor station in Erie County;
- a metering, regulation, and delivery station in Erie County;
- a dehydration facility in Niagara County;
- tie-ins in McKean, Cattaraugus, and Erie Counties;
- modification of tie-in facilities in Niagara County;
- mainline block valves in McKean, Allegany, Cattaraugus, and Erie Counties; and
- access roads and contractor/staging yards in McKean, Allegany, Cattaraugus, and Erie Counties.

An overview map of the project locations and facilities is provided on figure A.4-1. Detailed maps showing the pipeline route, aboveground facilities, access roads, and staging/contractor yards are contained in appendix A. More details on each of the project facilities are provided below.

National Fuel anticipates beginning tree clearing for the Project in fall 2016 and ending no later than March 2017. The anticipated in-service date is November 2017. However, these estimated dates are contingent upon Commission approval of the Project and National Fuel obtaining all other necessary permits, the timing of which cannot be determined at this time.

Mileposts
Proposed Pipeline
Proposed EMP-03
Aboveground Facilities

Figure A.4-1
Project Overview Map
Northern Access 2016 Project
Allegany, Cattaraugus, Erie, and Niagara Counties, New York

a. Pipeline Facilities

The project pipeline would begin near a National Fuel subsidiary's existing Clermont Compressor Station in McKean County, Pennsylvania and end at National Fuel's X-North Pipeline, just north of National Fuel's existing Porterville Compressor Station near the Town of Elma, Erie County, New York. The pipeline would consist of 24-inch-diameter pipeline and approximately 69 percent of the project pipeline would be co-located with existing pipeline and powerline rights-of-way. Table A.4.a-1 summarizes the project pipeline facilities and length of co-location by county.

Pipeline facilities would also include the new construction of approximately 2.1 miles of 16-inch-diameter and 24-inch-diameter pipeline in Niagara County, New York. The new 2.1-mile-long pipeline would have a maximum allowable operating pressure (MAOP) of 1,440 pounds per square inch gauge.

TABLE A.4.a-1

Proposed Pipeline Facilities

County, State	Begin Milepost	End Milepost	Total Length (miles)	Co-located Length (miles)
McKean, Pennsylvania	0.0	27.8	27.8	14.0
Allegany, New York	27.8	36.9	9.1	7.9
Cattaraugus, New York	36.9	71.9	35.0	30.9
Erie, New York	71.9	96.9	25.0	15.5
Niagara, New York	0.0	2.1	2.1	0.0
Pipeline Total			**99.0**	**68.3**

b. Aboveground Facilities

Pendleton Compressor Station

Empire proposes to construct one new compressor station, known as the Pendleton Compressor Station, in Niagara County. This new compressor station would include two gas-fired compressor units (two gas turbines), totaling approximately 22,000 hp that would be housed within two new buildings (one unit in each building). Appurtenant facilities would include an access driveway, parking areas, a station control/auxiliary building, intake and exhaust silencers, gas coolers, turbine lube oil coolers, unit blowdown silencers, a filter-separator with a liquids tank and an emergency electrical power generator. In addition, measurement and control facilities would be installed.

Pipeline facilities required for this compressor station include construction of a total of approximately 2.1 miles of pipeline in the Town of Pendleton, Niagara County comprised of 1) 0.90 mile of new 16-inch-diameter pipeline to connect the proposed Pendleton Compressor Station northward to the existing XM-10 pipeline (acquired from National Fuel) and on to Empire's Line EMP-03 (all to be called EMP-03) and 2) 1.2 miles of new 24-inch-diameter pipeline (EMP-12) to connect the Pendleton Compressor Station southward to National Fuel's existing X-North Pipeline.

Porterville Compressor Station

At the existing Porterville Compressor Station in the Town of Wales, Erie County, National Fuel proposes to add a total of 5,000 hp of compression, including reciprocating engine driven compressors. The existing station currently operates at 6,000 hp.

Appurtenant facilities would include a station control/auxiliary building, intake and exhaust silencers, gas coolers, unit blowdown silencers, a filter-separator with a liquids tank, and an emergency electrical power generator. In addition, measurement and control facilities and a pressure reduction station would be installed at the existing station. Suction and discharge pipelines would be installed to connect the new compressors to the existing X-North Pipeline in the Porterville Compressor Station facility.

The construction workspace (including laydown areas, parking, materials storage, and construction areas) and operational area for these new facilities would be entirely within National Fuel's existing property for the Porterville Compressor Station, which totals approximately 15.5 acres.

TGP Interconnect

The Tennessee Gas Pipeline (TGP) Interconnect metering, regulation, and delivery station would be located in the Town of Wales, Erie County at milepost (MP) 92.1. The meter station would consist of an unmanned facility enclosed by chain link fence containing a meter, regulating and flow control facilities housed in a building, associated aboveground and below ground piping, and valve fixtures to tie in to the Mainline Pipeline and the existing TGP 200 Line. The metering and regulator building would be constructed on poured concrete slab foundations or piles, with the balance of the yard inside the facility fence line consisting of crushed stone. This station would also require power, communications, and a stand-by generator.

Wheatfield Dehydration Facility

A dehydration unit to remove water from the natural gas stream would be installed in the Town of Wheatfield, Niagara County. National Fuel would utilize glycol dehydrators to remove water from the natural gas stream. The purpose of this unit is to take gas that already meets U. S. standards for gas pipeline moisture content and allow it to meet the differing gas standards required within TransCanada's system.

This station would be an unmanned facility enclosed by chain link fence containing a glycol reboiler/regenerator, glycol contactor, as well as pumps for the glycol exchange and the required piping valves and electronic controls necessary to operate the unit remotely. This station would also require power, communications, and a stand-by generator. This facility would not require the installation of an individual septic system or tie-ins to municipal water and sewer treatment facilities. The balance of the yard inside the facility fence line would consist of crushed stone. All of the facilities described above would be installed on the property to be acquired by Empire.

Additional Aboveground Facilities

National Fuel would construct additional aboveground facilities including mainline valves (MLVs) and tie-in facilities. National Fuel would generally be installing MLVs along its proposed pipeline, some of which may be at proposed interconnect or tie-in facilities, within areas affected by pipeline construction and the permanent operational right-of-way.

A tie-in would be constructed at an existing Producer Interconnect Station located at Project MP 0.0 (southern terminus) on property owned by a National Fuel subsidiary. The existing station interconnects with the TGP 300 Pipeline. As part of the Project, this site would also be attached to the existing Northern Access pipeline at MP 0. This would require the addition of metering, flow control, additional indirect heaters, and additional filtration by NFG Midstream Clermont LLC. In addition, a pig launcher and associated piping would be installed as part of the Project.

A tie-in would be constructed at approximate pipeline MP 43, on property that was acquired by National Fuel and developed as the Hinsdale Compressor Station as part of National Fuel's Northern Access 2015 Project[6]. This tie-in would involve installation of necessary piping and valves (series of "jumper valves") to tie the proposed project to the Hinsdale Compressor Station. Electric power and telecommunications would be provided by the Hinsdale Compressor Station.

A tie-in to National Fuel's existing X-North Pipeline would be constructed at Project MP 96.5 (northern terminus). This site would include a meter station with pressure control, overpressure protection, flow control, and a pig receiver. This facility would require electric power and telecommunications.

Modification of tie-in facilities (including replacement of a 12-inch tap with a 16-inch tap) at the north end of EMP-03 where it ties into the Empire (tie-in to Empire Pipeline) would also be necessary.

National Fuel would also remove the existing meter and odorizer station in Niagara County, reusing some of the equipment at the proposed Pendleton Compressor Station.

c. Access Roads and Staging/Contractor Yards

In addition to public roads in the area, National Fuel would utilize 60 access roads during construction, 12 of which would be retained for permanent access to the aboveground facilities and operation and maintenance activities along the pipeline. The remaining roads would be returned to preconstruction conditions following construction. The majority of the Project access roads consist of existing dirt or gravel roads; many would require upgrades including widening, grading, matting, and/or graveling activities. The milepost location, existing land use, and approximate length and width of the project access roads are provided in appendix B.

[6] The Northern Access 2015 Project was reviewed under Docket Number CP14-100. The project was completed in 2015 and placed into service on November 1, 2015.

To support construction activities, National Fuel proposes to use seven staging/contractor yards at various locations along the pipeline route for the storage of equipment and materials; as well as three pipe storage yards.

5. Land Requirements

Construction of the Project would require a total of approximately 1,307.0 acres of land. Following construction, approximately 688.0 acres would be restored to pre-construction conditions. The remaining 619.0 acres of land would be retained to operate and maintain the facilities. Table A.5-1 summarizes the construction and operation impacts associated with the project facilities. The construction right-of-way would typically be 75 feet wide in uplands and wetlands. However, right-of-way configurations would vary based on site-specific conditions. For example, National Fuel would utilize an additional 25 feet of workspace in areas where topsoil segregation is implemented. To maintain safe working conditions for portions of the pipeline that would be co-located with other existing pipelines, National Fuel would generally maintain at least a 50-foot offset (distance from centerline to centerline) between the proposed pipeline and existing pipelines and powerlines. Following construction, National Fuel would retain a 50-foot-wide permanent easement over the pipeline. The typical right-of-way configurations proposed by National Fuel are included in appendix C.

TABLE A.5-1

Summary of Land Requirements

Facility	Construction Impacts (acres)	Operation Impacts (acres)
Pipeline Facilities		
Pipeline Right-of-Way	901.6	600.0 [a]
Additional Temporary Workspace	167.5	0.0
Access Roads [b]	90.6	0.0
Staging/Contractor Yards	91.6	0.0
Aboveground Facilities		
Clermont Tie-in	0.0	0.3
Pendleton Compressor Station	15.1	8.0
Porterville Compressor Station	8.7	0.0
TGP Interconnect	5.9	1.9
Hinsdale Interconnect	13.4	3.0
Wheatfield Dehydration Unit	11.2	6.1
Mainline Valves	0.0	0.8
Other Tie-ins/Interconnects	0.9	0.0
Meter/Odorizer Station Abandonment	0.5	0.0
Access Roads [c]	0.0	1.1
Project Total	**1,307.0**	**619.0**

[a] Does not include the operational impacts associated with the permanent access roads and aboveground facilities within the permanent right-of-way.

[b] Includes temporary access roads that would be utilized during construction and permanent roads that would be utilized during the operation and maintenance of the pipeline.

[c] Includes permanent access roads associated with the aboveground facilities.

National Fuel has identified areas where contractor yards, staging areas, extra workspace, and access roads would be required to construct the Project. However, additional or alternative areas could be identified in the future due to changes in site-specific construction requirements. National Fuel would be required to file information on each of those areas for the FERC's review and approval prior to use.

6. Construction Schedule and Workforce

National Fuel anticipates that mobilization and construction of the compressor stations would commence in early fall 2016, with full Project construction underway by late fall 2016. These start dates are subject to receipt of necessary permits and regulatory approvals. National Fuel anticipates that all facilities would be placed in service on November 1, 2017.

Construction of the project pipeline would be accomplished using two construction spreads with a peak temporary work force of about 545 people. Construction of the aboveground facilities would require a peak temporary workforce of approximately 135 additional people. National Fuel does not anticipate needing to hire additional permanent employees to assist in operation and maintenance of the new facilities.

7. Construction, Operations, and Maintenance Procedures

National Fuel would adhere to guidelines set forth in its Erosion and Sediment Control & Agricultural Mitigation Plan (ESCAMP), which incorporates the FERC's *Upland Erosion Control, Revegetation, and Maintenance Plan* (Plan) and *Wetland and Waterbody Construction and Mitigation Procedures* (Procedures)[7] and the New York State Department of Environmental Conservation (NYSDEC) and the Pennsylvania Department of Environmental Protection (PADEP) Design Manuals. In addition, National Fuel would adhere to the conditions contained permits and/or developed in consultation with the USACE, the U.S. Department of Agriculture's Natural Resources Conservation Service (NRCS), and the NYSDAM.

a. General Pipeline Construction Procedures

Construction of the pipelines would follow industry-standard practices and procedures, which involve a series of discrete activities conducted in a linear sequence. Figure A.7.a-1 shows the typical steps of cross-country pipeline construction.

Prior to construction, National Fuel's survey contractor would stake the pipeline centerline and the limits of the construction right-of-way and additional temporary workspace (ATWS) areas. Wetland boundaries and other environmentally sensitive areas also would be marked at this time. A clearing crew would then clear the work area of vegetation and other obstacles, including trees, stumps, logs, brush, and rocks. Cleared vegetation would be burned, chipped, or hauled offsite to a commercial disposal facility.

[7] Copies of the FERC Plan and Procedures may be accessed on our website (http://www.ferc.gov/industries/gas/enviro/guidelines.asp) or obtained through our Office of External Affairs at 1-866-208-3372.

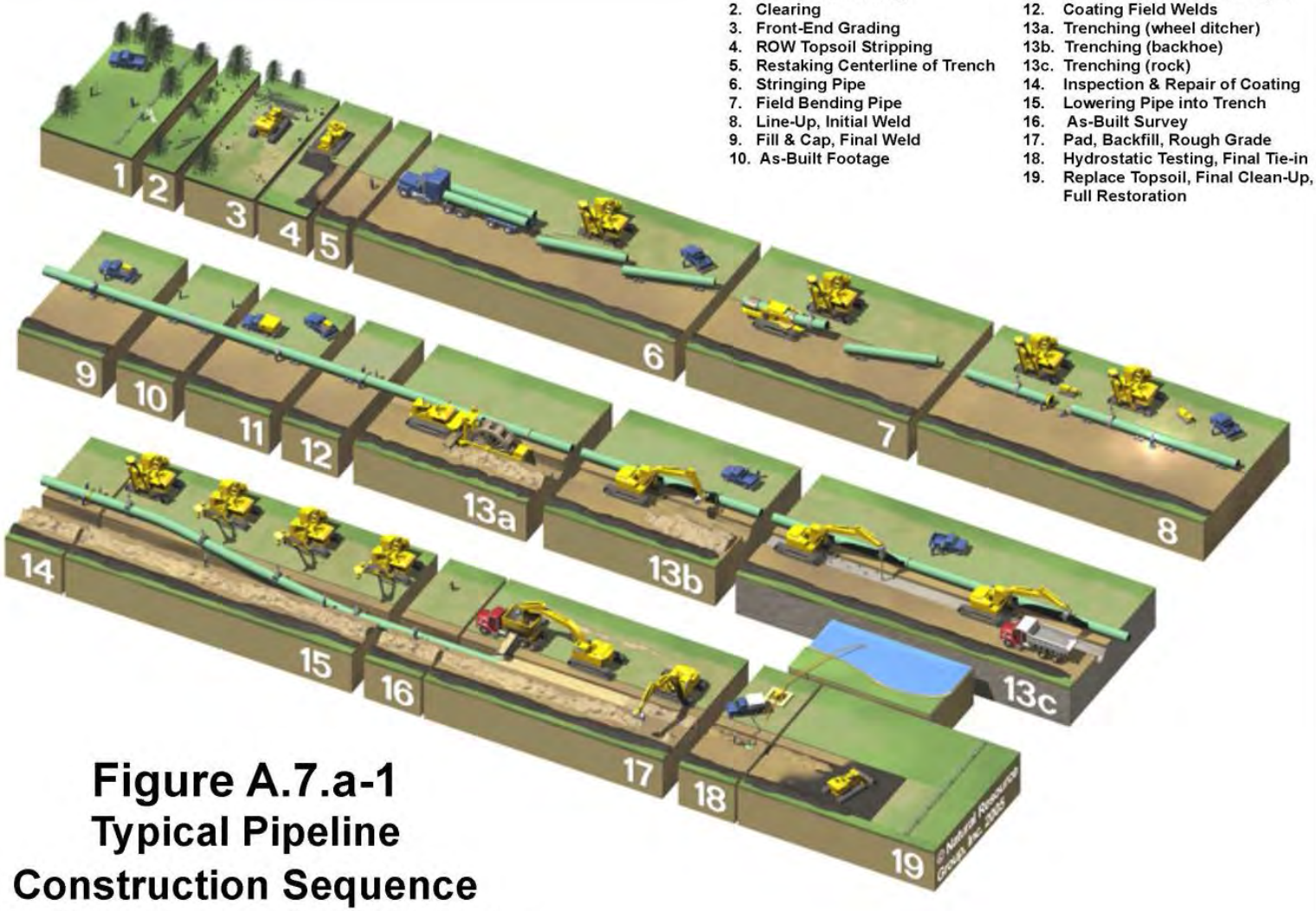

Figure A.7.a-1
Typical Pipeline Construction Sequence
Northern Access 2016 Project

Duplication or alteration of this image is not permitted without authorized permission

Following clearing, the construction right-of-way and ATWS areas would be graded where necessary to provide a level work surface. In areas disturbed by grading, temporary erosion and sediment controls would be installed, in accordance with the Plan and Procedures, to minimize erosion and sedimentation. These erosion and sediment controls would be inspected and maintained throughout the construction and restoration phases of the Project.

Trenching would be conducted with trenching machines, backhoes, or other similar equipment. In general, the trench would be deep enough to provide for approximately 3 feet of cover over the pipeline as required by U.S. Department of Transportation (DOT) regulations in 49 CFR 192. The width of the top of the trench would vary based on site-specific condition. Trench spoil would be deposited adjacent to the trench within the construction right-of-way. To prevent mixing of the soil horizons, topsoil segregation would be performed in residential areas, non-saturated wetlands, croplands, improved pastures, and in areas requested by the landowner. In upland areas, National Fuel would strip topsoil from either the full work area or from the trench and subsoil storage area. In non-saturated wetlands, topsoil would be segregated within the trench line only.

Once the trench is excavated, the pipe would be positioned along the side of the trench. The pipe would be bent by hydraulic pipe-bending machines, where necessary, to allow for a uniform fit with the contours at the bottom of the trench. After the pipe sections are bent, they would be welded together into long sections and placed on temporary supports. Welding would be conducted in compliance with 49 CFR 192 and American Petroleum Institute Standard 1104 Welding of Pipelines and Related Facilities. Completed welds would be visually and non-destructively (i.e., radiographically) inspected, and all pipe welds would be coated in accordance with required specifications. The coating would be inspected for defects, and repaired, if necessary, before lowering the pipe into the trench.

Prior to lowering-in, the trench would be inspected to ensure it is free of rocks and other debris that could damage the pipe or its protective coating. The pipe would then be lifted from the temporary supports and lowered into the trench using side-boom tractors or similar equipment. After lowering-in, the trench would be backfilled with previously excavated materials and crowned to approximately 6 inches above its original elevation to compensate for subsequent settling.

After backfilling, the entire pipeline would be hydrostatically tested in accordance with the DOT requirements of 49 CFR 192 and applicable permit conditions, to ensure that the system is free from leaks and provides the required margin of safety at operating pressures. This testing involves filling the pipeline with water and then pressurizing the water for 8 hours. Any considerable loss of pressure indicates that a leak may have occurred and would require further inspection. If a leak is discovered, the pipeline would be repaired and the segment retested. The primary water sources used for hydrostatic testing would be nearby waterbodies. The sources and discharge locations for the hydrostatic testing are discussed in EA section B.2.b.

Final cleanup would begin after backfilling and as soon as weather and site conditions permit. During cleanup, construction debris and organic refuse not suitable for distribution over the right-of-way would be collected and taken to a disposal facility, unless the landowner or land managing agency approves leaving materials onsite for beneficial reuse, stabilization, or habitat

restoration. Contours along the right-of-way would be restored to pre-existing conditions as closely as possible. Segregated topsoil would be returned to the stripped area, and permanent erosion controls would be installed. Revegetation measures would be implemented in accordance with National Fuel's ESCAMP and Project-specific plans, or based on specific landowner requests.

b. Special Pipeline Construction Procedures

National Fuel would use special construction techniques when constructing across waterbodies, wetlands, roads and railroads, agricultural areas, residential areas, and in areas with steep side slopes as described below.

Waterbody Crossings

Waterbodies, especially those under 100 feet wide, are typically crossed using conventional excavator type equipment and wet- or dry-crossing techniques, provided there is perceptible flow at the time of crossing. If no perceptible flow is present, waterbodies can be crossed using typical upland construction techniques. Some waterbodies, typically those that are either over 100 feet wide, contain protected species, or are associated with engineering constraints, may be crossed using the horizontal directional drill (HDD) method. The proposed crossing method for each of the waterbodies in the project area is included in appendix E.

Open-Cut Method

The wet-crossing (open-cut) method entails trenching directly through the waterbody. The pipeline is then strung across the waterbody, with any joints welded in extra work spaces prior to stringing. The pipeline is then lowered into place with weights slung over it, if necessary, and the trench backfilled.

In-stream Project construction activities would be limited to 24 to 48 hours depending on stream width, unless site-specific conditions make completion within that time infeasible. Equipment operating in the waterbody would be limited to that needed to complete construction of the pipeline. All other construction equipment would cross on an equipment bridge.

Dry-Ditch Crossing Method

The dry-ditch crossing method involves installation of either flume pipe(s), a dam and pump, or combination of both prior to trenching (if flow is present) to divert the stream flow over or around the construction area and allow trenching of the stream crossing in drier conditions isolated from the stream flow. A flume crossing involves installation of a flume pipe(s); sand bag or sand bag and plastic sheeting upstream and downstream of the crossing location to act as barrier to divert water to the flume pipe upstream and prevent water from entering the work area downstream; excavation of the trench in the dry area between barriers, then pipe laying and backfilling the trench; and removal of the flumes and barriers. Dam and pump crossings also involve installation of barriers upstream and downstream of the crossing location, but with the water being diverted around the work area via pumps. Pump hoses are screened to prevent entrainment of fish and discharges are designed such that stream scour does not occur downstream of the crossing. Spoil removed during trenching is typically stored away from the water's edge and protected by sediment containment structures.

Regardless of crossing method, National Fuel would return streambeds to their pre-construction contours to the extent possible. Stream and river banks would be restored to their pre-construction condition and allowed to re-vegetate in accordance with National Fuel's ESCAMP and applicable permit conditions.

Horizontal Directional Drill Method

The HDD method allows for trenchless construction across an area by drilling a hole below the depth of a conventional lay, and then pulling a prefabricated section of pipe through the hole. This method is used to avoid direct impacts on sensitive environmental features or areas that otherwise present difficulties for standard pipeline construction. Proposed HDD locations for the Project are presented in table B.2.b.1.

For each HDD crossing, National Fuel would place a drill rig on the entry side of the proposed HDD and begin drilling a small pilot hole along a predetermined path beneath the waterbody or roadway. The pilot hole would be progressively enlarged through a process called reaming. A reaming tool would be installed at the end of the drill string on the exit side of the pilot hole, and then drawn back to the drill rig to enlarge the hole. Several passes with progressively larger reaming tools could be needed to enlarge the hole to a sufficient diameter to accommodate the pipeline. During this process, a drilling slurry consisting of bentonite clay and water would be circulated through the hole to remove drill cuttings, lubricate the drill bit, and maintain the integrity of the hole. Once the reaming process is complete, a prefabricated segment of pipe would be attached to the drill string on the exit side of the crossing, and pulled back through the hole toward the drill rig.

Wetland Crossings

Wetland boundaries would be delineated and marked in the field prior to construction activities. The pipeline construction right-of-way in wetlands would be limited to 75 feet wide. Woody vegetation within the construction right-of-way would be cut off at ground level and removed from the wetlands, leaving the root systems intact. The pulling of tree stumps and grading activities would be limited to the area directly over the trench line unless it is determined that safety-related construction constraints require grading or the removal of stumps from the working side of the right-of-way. Construction equipment operating in wetland areas would be limited to that needed to clear the right-of-way, dig the trench, install the pipeline, backfill the trench, and restore the right-of-way. Topsoil segregation would be utilized in unsaturated wetlands to preserve the existing seed bank and aid in the successful restoration of the disturbed wetland. Trench plugs would be installed as necessary to maintain wetland hydrology.

The specific crossing procedures used to install the pipeline across wetlands would depend on the level of soil stability and saturation encountered during construction. Construction across unsaturated soils that can support the weight of equipment would be conducted in a manner similar to the upland construction procedures. In areas that are proposed for conventional open trench construction, but where soil conditions may not support the weight of equipment, timber mats would be used to minimize disturbance to wetland hydrology and maintain soil structure.

The push-pull method of construction could be used in inundated or saturated conditions where wetland soils and hydrology cannot support conventional pipe laying equipment, or in areas that have significant quantities of water that would allow for the pipe to be floated over the open trench. With this method, construction and excavation equipment would work from temporary work surfaces and a prefabricated pipeline segment would be pulled or floated into position then sunk with buoyancy control devices and placed in the trench.

Road and Railroad Crossings

Construction across paved roads, highways, and railroads would be conducted in accordance with National Fuel's ESCAMP and any requirements identified in road and railroad crossing permits or approvals. All of the public roads, highways, and railroads would be crossed using the HDD method discussed above or by conventional subsurface boring beneath the roadbed or railroad (table A.7.b-2). A bored crossing consists of excavating a pit on each side of the road or railroad; placing boring equipment within the pits; boring a hole under the roadbed or railroad; and pulling a section of pipe through the hole. Typically, there are little or no disruptions to traffic at road, highway, or railroad crossings during boring operations. National Fuel states that some private roads would be crossed via open cut following negotiations with the affected parties.

TABLE A.7.b-2

Public Roads, Highways, and Railroads Crossed by Horizontal Directional Drill

Roadway	County, State	Milepost
Interstate Highway 86	Cattaraugus, New York	43.2
Conrail Railroad	Cattaraugus, New York	43.4
New York State Highway 16/400	Erie, New York	88.9
West Blood Road	Erie, New York	96.5

Residential Areas

Construction activities in residential areas would be completed as quickly as practicable, while maintaining safe working conditions, to minimize disturbances to residents. All reasonable efforts would be made to maintain access to the residences during construction. If access is temporarily impeded, National Fuel would coordinate with landowners to minimize the disturbance. Temporary safety fences would be erected along the construction right-of-way in areas where construction activities would take place within close proximity to residences. Homeowners would be notified in advance of any expected utility interruption and the estimated duration of outages. Topsoil would be segregated in residential areas unless specifically requested otherwise by a homeowner, or if National Fuel elects to import topsoil. Following the completion of construction activities, all debris would be removed and residential areas restored to pre-construction conditions. National Fuel has prepared site-specific plans for residences within 25 feet of the construction workspace (see appendix F), which are further discussed in section B.5.a.

Agricultural Areas

In active croplands, pastures, or hayfields, the topsoil layer would be removed and segregated from the subsoil in accordance with National Fuel's ESCAMP. Following pipeline installation, the subsoil would be returned to the trench and the topsoil replaced in the area from which it was stripped. The topsoil and subsoil would be tested for compaction in all agricultural areas disturbed by construction. Severely compacted agricultural areas would be mitigated through the use of deep tillage operations during restoration activities using a paraplow or similar implement.

If any irrigation systems are encountered, National Fuel would attempt to maintain the flow of water throughout construction. Temporary disturbances to irrigation systems would be coordinated with the landowner. If drain tiles are encountered, National Fuel would avoid impacting the tiles where possible. All drain tiles disturbed during construction would be repaired and or replaced in accordance with the procedures outlined in the ESCAMP.

Side Slopes

Portions of the pipeline would cross areas of steep side slope or rolling terrain that may require the use of cut-and-fill grading to provide for safe working conditions. In these areas, grading activities would cut down the upslope side of the construction right-of-way. Material from the cutting would be used to fill the downslope side of the construction right-of-way to create a safe and level surface for travel lanes and equipment operation. The trench would be excavated from the newly graded right-of-way. Following pipeline installation, the right-of-way would be restored as nearly as practicable to its original contours and stabilized in accordance with the ESCAMP.

c. Aboveground Facility Construction Procedures

Construction of the aboveground facilities would occur concurrently with the pipeline construction activities discussed above. Construction would begin with site clearing and grading. Subsequent activities would include preparing foundations, installing underground piping, erecting and installing buildings, installing aboveground piping and equipment, testing the piping, testing the control equipment, cleaning up the work area, and graveling access roads and parking areas. Each aboveground facility site would be fenced for security and safety; all control devices would be installed and tested prior to operation. Following construction, disturbed areas that are not paved or covered with gravel would be finish-graded and seeded.

d. Environmental Compliance Inspection and Monitoring

National Fuel would employ environmental inspectors (EIs) to monitor environmental compliance during all phases of construction. At least one EI would be assigned to each construction spread. Additional EIs would be added to the Project as needed to adequately cover all activities associated with the construction of the pipeline and aboveground facilities. The EIs would be responsible for assuring that the measures contained in National Fuel's ESCAMP and Project-specific plans and any other environmental permit conditions or landowner agreements are followed during construction and restoration activities. The EIs would have peer status with other activity inspectors and would have stop-work authority in the event that violations of

environmental conditions of the Certificate, state or federal environmental permit conditions, or landowner requirements occur; and would have authority to order appropriate corrective action. Other specific responsibilities of the EI include:

- verifying that the limits of authorized construction work areas, locations of approved access roads, and boundaries of sensitive resource areas are properly marked before clearing and throughout construction;
- identifying erosion/sediment control and stabilization needs and ensuring that proper controls are installed and maintained;
- ensuring that topsoil and subsoil are separated in agricultural, residential and wetland areas, and that they are tested for compaction following restoration in agricultural and residential areas;
- verifying that trench dewatering activities do not result in deposition of sediment into wetlands or waterbodies; and
- advising the Chief Construction Inspector when conditions (such as wet weather) make it advisable to restrict construction activities to avoid excessive rutting.

Environmental training would be given to National Fuel's personnel and to contractor personnel whose activities may impact the environment during pipeline construction. All construction personnel from the chief inspector, EIs, craft inspectors, and contractor job superintendent to loggers, welders, equipment operators, and laborers would be given the appropriate level of environmental training. The training would be given prior to the start of construction and throughout the construction process, as needed. The training program would cover National Fuel's ESCAMP and Project-specific plans, job-specific permit conditions, company policies, and any additional environmental permit conditions issued for the Project. In addition to the EIs, all other construction personnel are expected to play an important role in maintaining strict compliance with all permit conditions to protect the environment during construction.

Due to the amount of agricultural land affected by the Project, agricultural inspectors and drainage specialists would be also be employed to ensure aspects of the Project that affect farmland meet or exceed basic state standards. In accordance with National Fuel's ESCAMP, there would be an agricultural inspector and drainage specialist assigned to each construction spread.

Construction contractors employed by National Fuel would be required to observe and comply with federal, state, and local laws, ordinances, and regulations that apply to the conduct of their work. Contractors must also comply with Minimum Federal Safety Standards adopted by the DOT under the Natural Gas Pipeline Safety Act of 1968, as well as National Fuel's company safety standards.

National Fuel has also committed to participate in a FERC third-party compliance monitoring program during the construction phase of the Project. Under this program, National Fuel would fund a contractor, to be selected and managed by the FERC, to provide environmental compliance monitoring services. The FERC third-party Compliance Manager would provide daily reports to the FERC on compliance issues and make recommendations to the FERC Environmental Project Manager on how to address compliance issues and construction changes, should they arise. FERC staff would also conduct inspections throughout construction and restoration.

e. Operation and Maintenance

National Fuel would operate and maintain the new pipeline and aboveground facilities in accordance with all applicable federal and state requirements, including the minimum federal safety standards identified in 49 CFR 192.

National Fuel's maintenance of the pipeline facilities would include periodic visual inspections as well as routine pedestrian surveys, as necessary, in accordance with the applicable regulatory requirements and National Fuel's operations requirements. Leak inspections and cathodic protection maintenance would be conducted in accordance with DOT requirements. Additionally, all pipeline markers and signs would be routinely inspected and would be replaced as necessary to ensure that pipeline locations are clearly identified.

Post-construction monitoring would be conducted to identify erosion or washout areas, damaged or non-functional permanent erosion control devices, and to evaluate restoration of affected wetlands. Any issues identified during post-construction monitoring would be addressed in accordance with applicable federal and state regulations and National Fuel's ESCAMP. National Fuel would file quarterly activity reports with the FERC documenting problems, including those identified by landowners, and corrective actions taken for at least 2 years following construction or until restoration is complete. The FERC staff would conduct annual restoration inspections until restoration is successful.

Maintenance of the permanent pipeline right-of-way would include periodic mowing, as necessary, to allow for visual inspections. Actively cultivated areas would be allowed to revert to pre-construction use for the full width of the right-of-way. In all other upland areas a 50-foot-wide permanent pipeline right-of-way would be maintained in a primarily herbaceous state. In wetlands, a 10-foot corridor centered over the pipeline would be maintained; trees within 15 feet of the pipeline with roots that could compromise the integrity of the pipeline coating would be selectively cut and removed.

Operation and maintenance activities at the new compressor stations would include calibration, inspection, and other scheduled or routine maintenance. Operational testing would also be performed on safety equipment to ensure proper functioning.

8. Permits, Approvals, and Consultations

Table A.8-1 lists the applicable permits, approvals, and consultations for the Project. National Fuel would be required to obtain all necessary permits and approvals relating to construction and operation of the Project, regardless of whether they appear in the table or not.

TABLE A.8-1

State and Federal Permits, Approvals, and Consultations

Agency	Permit/Approval/Consultation	Filing/Consultation Date	Anticipated Approval
Federal			
Federal Energy Regulatory Commission	Section 7(c) of the NGA – Certificate of Public Convenience and Necessity	March 16, 2015	October 2016
U.S. Fish and Wildlife Service – New York and Pennsylvania Field Offices	Endangered Species Act, Section 7 Consultation; Project review under Migratory Bird Treaty Act	Coordination June-July 2014; Initial Letter Sent August 1, 2014; Habitat Assessment Report Sent January 8, 2016; Updated Habitat Assessment Report Sent March 11, 2016.	June 2016
U.S. Army Corps of Engineers, Buffalo and Pittsburgh Districts	Section 404 of the Clean Water Act – Wetland and Waterbody Crossing Permit Section 10 of the Rivers and Harbors Act (for pipeline crossing Navigable Waterways)	Joint Application Submitted to Pittsburgh District (for PA portion) February 4, 2016; Joint Application Submitted to Buffalo District (for NY portion) February 29, 2016.	October 2016
U.S. Department of the Interior, National Park Service	Consultation on Crossing North Country National Scenic Trail/Finger Lakes Trail	March 16, 2016	April 26, 2016 (mitigation plan approved)
Commonwealth of Pennsylvania			
Pennsylvania Historical and Museum Commission, Bureau for Historic Preservation, State Historic Preservation Office (SHPO)	Section 106 of the National Historic Preservation Act, Cultural Resources Consultation	June 23, 2014 submitted Request to Initiate Consultation; Submitted Phase I Cultural Resources Report and Historic Architectural Report March 2015, Addenda Reports (Archaeological and Architectural) January 2016; Follow-up consultations February 2016.	July 2016
Pennsylvania Department of Conservation and Natural Resources Natural Diversity Inventory	Threatened & Endangered Species Consultation	Initiated consultation June 19, 2014; Received initial response July 2014 with recommended presence/absence survey for two plant species. Submitted survey report February 2015 and Supplemental survey report September 2015. Submitted impact avoidance minimization plan October 27, 2015.	November 23, 2015
Pennsylvania Fish and Boat Commission (PFBC)	Threatened & Endangered Species Consultation	Initiated consultation June 19, 2014; Received initial response August 5, 2014 with recommended presence/absence surveys for two species (fish, amphibian) and habitat assessment for various mussel species. Submitted survey reports December 2014 and January 2015. Conference call February 2015. Follow-up blue spotted salamander surveys for route change areas, submitted report and multi-species impact avoidance plans October 27, 2016.	January 4, 2016
PFBC	Permit for In-Stream Blasting (if required)	September 2016	October 2016
Pennsylvania Department of Environmental Protection (PADEP)	State Wetland and Waterbody Crossing/Encroachment Permit and Section 401 Water Quality Certification	February 4, 2016	September 2016

TABLE A.8-1 (cont'd)

State and Federal Permits, Approvals, and Consultations

Agency	Permit/Approval/Consultation	Filing/Consultation Date	Anticipated Approval
PADEP	Pennsylvania State National Pollutant Discharge Elimination System – Hydrostatic Test Water Discharge Authorization (PAG – 10)	May 2016	September 2016
PADEP & McKean County Conservation District	Erosion and Sediment Control Permit (ESCGP-2)	May 2016	October 2016
New York State			
New York State Office of Parks, Recreation, and Historic Preservation, SHPO	Section 106 of the National Historic Preservation Act, Cultural Resources Consultation	Submitted Phase I Archaeological Investigation Report April 2015; Submitted Supplemental Archaeological Report February 8, 2016; Submitted Phase II Archaeological Investigation report/Brown Site March 21, 2016; Submitted Historic Architectural Survey Report March 2015; Submitted Supplemental Historic Architectural Report February 8, 2016. Additional supplemental reports in preparation (completion of minor survey skips and minor route changes), anticipated submittal June 2016.	Received interim correspondence and clearances, received clearance on Phase I Archaeological Report April 24, 2016; Received clearance Phase II Archaeological/Brown Site Report April 22, 2016; Received clearance Supplemental Historic Architectural Report March 7, 2016. Supplemental clearance anticipated July 2016.
New York Natural Heritage Program (NYNHP)	Threatened & Endangered Species Consultation	Initiated consultation June 19, 2014. Surveys conducted in 2015.	September 2016
New York State Department of Environmental Conservation (NYSDEC)	Request for Information re: threatened/endangered species and other environmental issues of NYSDEC concern.	Initiated consultation June 19, 2014. Meeting held September 24, 2014 to go over the NYNHP letter. Surveys conducted in 2015.	October 2016
NYSDEC	Article 24 – Freshwater Wetlands Permit (State regulated wetland crossings) Article 15 – Protection of Waters Permit (State-regulated stream crossings) Section 401 Water Quality Certification	February 2016	October 2016
NYSDEC	State Pollutant Discharge Elimination System General Permit for Stormwater Discharges from Construction Activities	July 2016	September 2016
NYSDEC	Air Permit (for new compressor station/additions to existing compressor stations)	Pendleton Compressor Station application – submitted February 26, 2016; Porterville Compressor Station application –submitted February 26, 2016; Wheatfield Dehydration Facility application – submitted April 27, 2016.	September 2016
New York State Department of State, Coastal Zone Consistency Review Unit	Coastal Zone Consistency Determination (for Blasdell/Metalico Pipe Yard)	May 16, 2016	July 2016
New York State Department of Agriculture and Markets	Coordination regarding project construction and land restoration in agricultural lands.	August 14, 2014 – Summer 2016	Coordination Only (no permit required)

B. ENVIRONMENTAL ANALYSIS

Construction and operation of the Project would have temporary, short-term, long-term, and permanent impacts. As discussed throughout this EA, temporary impacts are defined as occurring only during the construction phase. Short-term impacts are defined as lasting between 2 and 5 years. Long-term impacts are defined as lasting 5 years or more. Permanent impacts are defined as lasting throughout the life of the Project.

1. Geology and Soils

a. Geology

Physiography and Geologic Setting

The majority of the Project would be within the Appalachian Plateau Province. The Appalachian Plateau is an uplifted tract of nearly horizontal or gently folded strata extending from the Adirondacks in northern New York, southwest to the Coastal Plain in Alabama. Elevations in this province are generally higher than surrounding areas, ranging from approximately 1,000 feet above mean sea level (msl) along the western border of the province, to over 3,500 feet above msl along the Allegheny Front. Much of the Appalachian Plateau is composed of cyclic sequences of Devonian to Permian sedimentary strata, including sandstone, siltstone, shale, limestone, and coal, of which the upper strata are more resistant to weathering, resulting in decreased erosional processes (Fenneman and Johnson, 1946; Fenneman, 1938; Hunt, 1967; U.S. Geological Survey [USGS], 2014a).

Approximately 2.2 miles of the proposed pipeline and all of the replacement pipeline and aboveground facilities would be within the Central Lowland Province. The Central Lowland is the largest physiographic province, encompassing 585,000 square miles in 16 states. It is characterized by low altitude and low relief due to the mantle of glacial deposits that have smoothed the ground surface and concealed the underlying thin, broadly warped sedimentary rock formations. Elevations in this province range from 1,800 feet above msl on its western border down to less than 300 feet above msl on the shores of Lake Ontario. Bedrock geology consists of Cambrian to Carboniferous coal measures, shale, siltstone, and dolostone (Fenneman, 1938; Fenneman and Johnson, 1946; Hunt, 1967; USGS, 2014a).

National Fuel conducted a HDD feasibility analysis at the proposed Allegheny River crossing, Interstate-86 crossing, and State Route 16/State Route 400 crossing. A total of eight geotechnical boreholes were completed, including two in the vicinity of the Allegheny River, four in the vicinity of Interstate-86, and two in the vicinity of State Route 16. At the Allegheny River crossing, surficial geologic materials consist of fine to coarse sand and gravel deposits with occasional cobbles and boulders which extend more than 100 feet below the ground surface at the crossing location. Layers of silt and clay are present, but the majority of the soils are coarse outwash deposits. At the Interstate-86 crossing, glacial outwash deposits comprised of sand and gravel, intermittent layers of silt and clay, and occasional cobbles and boulder are also present. Shale and siltstone bedrock was encountered at 115 and 200 feet in two of the boreholes. At the State Route 16 crossing, materials consist of very soft clay and silt with trace amounts of fine to medium sand on the east side of the crossing. Materials on the west side of the crossing consist of very compact glacial till consisting of course to fine sand with some silt, gravel, and clay over weathered shale bedrock.

Based on the results of the HDD feasibility analysis, National Fuel determined that the proposed locations would be challenging, but feasible, and within the capabilities of the HDD contracting community. Coarse grained soils near the surface would be avoided through use of a temporary conductor or casing, which would improve borehole stability. Upon completion of the HDD, any conductor or casing would be removed from the bore. In addition, during the construction the HDD contractor would be required to complete a swab pass prior to initiating pullback operations. A swab pass cleans the borehole, removes and remaining fine gravels or clay clumps, and compacts the borehole walls to improve borehole stability. National Fuel has prepared an HDD Contingency Plan, which we have reviewed and found acceptable, that details personnel training requirements, containment methods, and notification procedures in the event of HDD failure. National Fuel has stated that if an HDD was unsuccessful, an additional HDD would be performed using data and lessons learned from the first drill. If the second HDD is unsuccessful, National Fuel would propose to use a Cofferdam/Porta Dam or multi-flumed crossing. Waterbody crossing are further discussed in section B.2.b.

Mineral Resources

Based on a review of USGS topographic maps, recent aerial photography, and available USGS and state databases, there are 11 active sand, gravel, topsoil or stone mining operations within 0.5 mile of the project facilities (New York Department of Environmental Conservation [NYDEC], 2015a; PADEP, 2015a; USGS, 2014b). In addition, 115 active oil or gas wells, 89 plugged, abandoned, or inactive oil or gas wells; and 6 oil or gas wells with an unknown status were identified within 0.5 mile of the project facilities (NYDEC, 2015a: PADEP, 2015b).

Blasting

Based on an analysis of the Soil Survey Geographic (SSURGO) Database, approximately 25 percent (24.6 miles) of the proposed pipeline routes cross areas with bedrock at depths of less than 60 inches (Soil Survey Staff, 2015a). Although not expected, all of the bedrock is considered lithic (i.e., hard) and could require blasting or other special construction techniques during installation of the proposed pipeline.

Geologic Hazards

Geologic hazards are natural, physical conditions that can result in damage to land and structures or injury to people. Such hazards typically include seismicity (e.g., earthquakes, surface faults, and soil liquefaction), landslides, flooding, and karst terrain. Conditions necessary for the development of other geologic hazards, including regional subsidence, avalanches, and volcanism, are not present in the proposed project area. In general, the potential for geologic hazards to significantly affect construction or operation of the proposed project facilities is low.

Earthquakes and Surface Faults

Historically, seismicity in the proposed project area has been very low. The closest significant earthquake to the Project occurred in 1998 near Jamestown, Pennsylvania, approximately 100 miles west-southwest of MP 0 on the proposed mainline route. The earthquake had a magnitude of 5.2 and caused light property damage in the area. However, significant hydrologic effects were noticed immediately following the earthquake. Some residents began reporting dry water wells, while at the same time others reported significant flows from their wells and spring discharges raising pond levels (USGS, 1999).

Based on USGS seismic hazard mapping, the Project is in an area where peak horizontal ground accelerations (PGA), with 10 percent probability of exceedance in 50 years, are 2 percent of gravity or less. At a 10 percent probability, the frequency of exceedance (return time) for a given horizontal ground acceleration is once every 500 years. PGAs in the project area, with a 2 percent probability of exceedance in 50 years (2,500 year return time), are 8 percent of gravity or less (USGS, 2008). For reference, PGAs less than 4 percent of gravity would result in light to no perceived shaking and no potential damage and PGAs between 4 and 9 would result in moderate perceived shaking and very light damage (USGS, 2006a).

According to the USGS Quaternary Fault and Fold Database, the Project does not cross any active faults (USGS, 2006b).

Soil Liquefaction

Soil liquefaction is a phenomenon often associated with seismic activity in which saturated, non-cohesive soils temporarily lose their strength and liquefy (i.e., behave like viscous liquid) when subjected to forces such as intense and prolonged ground shaking. Areas susceptible to liquefaction may include soils that are generally sandy or silty and are generally located along rivers, streams, lakes, and shorelines or in areas with shallow groundwater. Soil conditions necessary for liquefaction to occur would likely be present in the project area. However, due to the low potential for a seismic event that would cause strong and prolonged ground shaking, the potential for soil liquefaction to occur is very low.

Landslides

Landslides involve the down slope movement of earth materials under a force of gravity due to natural or man-made causes. The proposed project facilities are located in an area considered to have a low to moderate incidence of, and low to moderate susceptibility to landslides (Radbruch-Hall, 1982). National Fuel conducted a desktop analysis in areas that were identified as old landslides by USGS (1981) mapping. Following desktop reviews, the following locations were visited because Light Detection and Ranging (LiDAR) data indicated that these landslides may have occurred recently: MPs 6.7-6.9, 9.8-10.0, 21.5-21.7, 22.5-22.8, 23.1-23.1, 24.2-24.3, and 26.7. There was no evidence of active or recent landsliding observed at these sites.

National Fuel evaluated the proposed locations for the Porterville Compressor Station and Wheatfield Dehydration Facility for slope stability. Topography at the sites is relatively flat, and the proposed grading includes minor cuts and fills. The *Geotechnical Exploration Reports* prepared by National Fuel describe acceptable fill material and placement specifications, and determined that slope stability is not anticipated to be of concern for construction and operation of the sites.

Flooding

The greatest potential for flash flooding to occur in the project area would be along waterbodies during or after a large storm event with significant precipitation over a short period of time. According to the available Federal Emergency Management Agency (FEMA) flood insurance rate maps and the National Flood Hazard Layer data, portions of the proposed mainline pipeline and replacement pipeline, are located in a 100-year flood zone (FEMA, 2014). No aboveground facilities would be sited in a 100-year flood zone.

Karst Terrain

Karst features such as sinkholes, caves, and caverns can form as a result of the long-term action of groundwater on soluble carbonate rocks (e.g., limestone and dolostone). Based on Davies et al. (1984), the EMP-03 pipeline, Wheatfield Dehydration Facility, and Pendleton Compressor Station are in areas considered to have the potential for karst features. The Camillus, Syracuse, and Vernon Formations underlie portions of the Project and are composed of shale, dolostone, evaporites, and black shale. These carbonate rocks are buried under approximately 50 feet of glacially derived insoluble materials in a humid climate and can lead to karst formation. The Onondaga limestone of the Onondaga aquifer, located approximately 10 miles south of the Pendleton Compressor Station, has moderately developed karst features including sinkholes, disappearing streams, and solution-widened joints (USGS, 1987). The Onondaga limestone continues to the east into Genesee County where additional karst features are recognized. Other formations at or near the surface in Genesee County with moderately developed karst include Akron Dolostone and the Bertie Formation (USGS, 2010). These materials can also be found in Erie and Niagara County. To ensure that the identification and mitigation of karst features is addressed prior to and during construction, we are recommending below that National Fuel conduct additional desktop and geotechnical studies and develop a karst mitigation plan.

Paleontology

The project area is underlain by Paleozoic sedimentary rocks which have the potential to contain fossils. Although fossil specimens may be encountered during construction activities, no impacts on sensitive paleontological resources are anticipated. If unique or significant fossil specimens are discovered during excavation activities, National Fuel would notify the appropriate state agency.

General Impacts and Mitigation

The overall effect of the Project on topography and geology would be minor. The primary impacts would be limited to construction activities and would include temporary disturbance to slopes within the right-of-way resulting from grading and trenching operations in areas not crossed using the HDD method. National Fuel would minimize impacts by returning contours to pre-construction conditions to the maximum extent practicable. National Fuel has identified that the HDD crossings of the Allegheny River, Interstate-86, and State Route16/State Route 400 would encounter challenging drilling conditions due to coarse outwash deposits consisting of gravel, cobbles, and boulders; and artesian conditions in the case of State Route 16/State Route 400. If two HDD attempts are unsuccessful then National Fuel proposes to switch to a Cofferdam/Porta Dam or a multi-flumed crossing to cross the Allegheny River. However, no other alternatives have been proposed at the road crossings or for the Allegheny River; therefore, **we recommend that:**

- **<u>Prior to construction and as a part of its Implementation Plan</u>, National Fuel should file with the Secretary, for review and written approval by the Director of the Office of Energy Projects (OEP), an analysis of the direct pipe drill method as an alternate method at the two road crossings and the Allegheny River crossing.**

The majority of the project facilities would be constructed directly adjacent to existing pipeline, electric transmission line, or other utility rights-of-way, which already preclude mining operations. Therefore, construction and operation of the Project would not result in additional restriction to current or future mining operations in the area. One mine (Boehmer Gravel Products) along the route expressed concerns that construction and operation of the Project would result in the loss of extractable materials and revenue, and would hinder heavy equipment travel across the pipeline. This portion of the pipeline would be co-located with the existing Niagara Mohawk electric transmission line. The NYSDEC minimum setback requirements for property lines or public right-of-way easements is 25 feet plus an additional one and one-half times the height of the mine face setback to the mine floor in unconsolidated materials (NYSDEC, 2016a). National Fuel has committed to performing a mineral reserve analysis on the property and to submitting a *Mining Reserve Report* to be part of the right-of-way negotiations with the landowner. National Fuel would work with the landowner to resolve potential operational conflicts, such as including a landowner-preferred heavy equipment crossing in the project design. In addition, based on survey results, all of the oil and gas wells identified were at least 40 feet outside of construction workspaces and would not be impacted by the Project. As such, we conclude that the issues raised by the landowner can be satisfactorily resolved.

If consolidated bedrock is encountered during construction, National Fuel's preferred procedure would be to fracture and excavate the bedrock using standard construction equipment. Blasting of bedrock would only be required in areas where hard, crystalline bedrock is encountered and the bedrock cannot be removed by conventional excavation methods. National Fuel has provided its *Blasting Specifications* to minimize the effects of blasting and ensure safety during blasting operations. All blasting techniques would comply with federal, state, and local

regulations governing the safe storage, handling, firing, and disposal of explosive materials. Some of these measures could include:

- installation of blasting mats, using lesser amounts of explosives per shot hole, and employing delays between adjacent blast holes to minimize flyrock;
- employing the use of a seismograph to monitor vibrations along nearby active pipelines;
- posting warning signals, flags, and barricades;
- notifying landowners of the impending blasting activities; and
- following procedures for safe storage, handling, loading, firing, and disposal of explosive materials.

Several commenters expressed concern about blasting near residential homes and have requested pre- and post-blasting foundation inspections. If blasting is necessary, National Fuel has committed to not use blasting techniques within 150 feet of any residential structures, wells, and developed springs. Therefore, we agree that foundation inspections are not necessary.

Several commenters expressed concern about earthquake hazards in the project area. Based on the low probability of localized earth movements or geological hazards in the vicinity of the Project, we do not anticipate any problems attributable to such movements or hazards. Maintained pipelines constructed using modern arc-welding techniques have performed well in seismically active areas of the United States, such as California (O'Rourke and Palmer, 1996). Only large, abrupt ground displacements have caused serious impacts on pipeline facilities. Due to the limited potential for large, seismically induced ground movements in the project area (USGS, 2008) and the lack of identified recent surface faults, there is very little risk of earthquake-related impacts on the pipeline and other project facilities.

No areas would be crossed that would require special design or construction methods to address geological hazards. The proposed project facilities would be designed and built in accordance with DOT standards (49 CFR 192), which would provide adequate protection from washouts, floods, unstable soils, landslides, or other hazards that may cause the pipe to move or sustain abnormal loads. The potential for slope failure and erosion during construction would be minimized by implementing the measures in National Fuel's ESCAMP. The ESCAMP is derived from the FERC's Plan and Procedures, National Fuel's *Agricultural Mitigation Through the Stages of Pipeline Planning, Construction/Restoration and Follow Up Monitoring*, and from consultations with federal and state/commonwealth agencies. These measures would include the use of erosion control devices (e.g., silt fences, slope and trench breakers) and other best management practices to stabilize soils. Based on the implementation of these measures and compliance with the DOT standards, we conclude that the risk of impacts due to geologic hazards on the project facilities is low.

National Fuel provided slope configurations and stability evaluations for the Porterville Compressor Station and Wheatfield Dehydration Facility; however, National Fuel has not

provided documentation regarding the remaining aboveground sites. To ensure that the mitigation of landslides at the remaining project facilities is addressed, **we recommend that:**

- **<u>Prior to construction</u>, National Fuel should file with the Secretary, for review and written approval by the Director of OEP, a geotechnical exploration report that evaluates slope configurations and stability evaluations for the Hinsdale and Pendleton Compressor Stations, meter and regulator station, and interconnect with TGP.**

Several commenters expressed concern regarding flooding and stormwater management at the proposed Pendleton Compressor Station site. The developed portion of the site does not contain any wetlands and is outside of mapped FEMA flood zones. National Fuel would develop and implement a Stormwater Pollution Prevention Plan, which would be submitted to the NYSDEC for approval, in order to manage stormwater through the use of settling basins and filter fencing to control site runoff and infiltration. With these measures, we conclude that flooding and stormwater management can be properly addressed.

Karst terrain and the potential for karst features such as sinkholes, and/or surface collapse features can be problematic during construction activities. Karst hazards include the potential for ground subsidence or collapse sinkholes; impact on groundwater quality; and sinkhole flooding. Loose rock or overburden soil could obscure possible solution openings in the bedrock surface prior to construction and only become evident during trenching activities. These overburden materials could be subject to differential subsidence at locations where voids have formed in the underlying bedrock resulting in closed-contour depression sinkholes and/or surficial collapse of the soil column at ground surface (collapse sinkholes). This process could be significant in areas where the water table has been lowered either naturally or through man-induced activities such as groundwater pumping.

Impacts on groundwater quality could occur where sinkholes or karst features are present at or near ground surface. Karst systems have a very low self-purification or filtering capability which makes karst groundwater highly susceptible to impact from erosion of surface materials and/or spills. Erosion of excavated materials at ground surface into karst openings could impact local groundwater supplies such as springs and wells which would be manifested as increased turbidity and bacterial load. Inadvertent spills from equipment refueling and/or leaks could impact groundwater quality through rapid transport of contaminants discharging at springs and surface waterbodies. Mitigation of potential karst effects are described below.

To ensure that the identification and mitigation of karst features is addressed prior to and during construction, **we recommend that:**

- **<u>Prior to construction,</u> National Fuel should file with the Secretary, for review and written approval by the Director of OEP:**

1. **a desktop evaluation utilizing topographic maps and LiDAR imagery to assess the degree of karst development in the work areas. The evaluation should be followed by a site reconnaissance to field verify and map karst features identified;**

2. if necessary, a geotechnical investigation that identifies areas within the project workspace and along the pipeline alignment or adjacent aboveground facilities where karst is likely to be encountered (at a minimum EMP-03 pipeline, Wheatfield Dehydration Facility, and Pendleton Compressor Station); and

3. a karst mitigation plan that includes the specific measures that would be implemented to avoid (minor adjustment of facilities) or mitigate (properly close or protect) karst features encountered during construction. At a minimum, the construction measures in this plan should include:

a. stopping work in the area until a remedial assessment is carried out;

b. notifying the New York Geological Survey and FERC staff that karst features have been encountered;

c. prohibiting construction equipment, vehicles, hazardous materials, chemicals fuels lubricating oils, and petroleum products from being parked, refueled, stored or serviced within a 100 foot radius of any karst feature;

d. installing additional erosion control measures to prevent drainage toward any karst feature; and

e. using a qualified geologist licensed in the state where the work is being performed to monitor excavation activities at high probability karst.

If fossils are encountered during construction, National Fuel would temporarily cease excavation in the area and notify the state geological survey or natural history museum, as well as the FERC, to ensure that all of the fossils discovered are properly documented.

Based on National Fuel's proposed construction techniques and the implementation of minimization and mitigation measures, including our recommendation, we conclude that construction and operation of the Project would not significantly affect geologic resources in the project area.

b. Soils

Existing Soil Resources

Soil information for the majority of the project area was obtained from the NRCS's SSURGO database (Soil Survey Staff, 2015a). The SSURGO database is a digital version of the original county soil surveys developed by the NRCS for use with geographic information systems. It provides the most detailed level of soils information for natural resource planning and management. Additional information about soils was obtained from Official Soil Series Descriptions (Soil Survey Staff, 2015b).

Soils within the project area consist mainly of very deep, poorly to well-drained soils formed in glacial till deposits.

General Impacts and Mitigation

Construction activities such as clearing, grading, trench excavation, backfilling, and the movement of construction equipment along the right-of-way may affect soil resources. Clearing removes protective vegetation cover and exposes the soil to the effects of wind and rain, which increases the potential for soil erosion and sedimentation of sensitive areas. Grading, spoil storage, and equipment traffic can compact soil, reducing porosity and increasing runoff potential. Construction activities can also affect soil fertility and revegetation potential, and facilitate the dispersal and establishment of weeds. In addition, contamination from spills or leaks of fuels, lubricants, and coolant from construction equipment could adversely affect soils.

The soils in the project area were evaluated to identify prime farmland and major soil characteristics that could affect construction or increase the potential for adverse construction-related soil impacts. The soil characteristics evaluated include erosion potential, the potential for compaction, and revegetation concerns. Table B.1.b-1 summarizes the amount of prime farmland and the notable soil characteristics in the project area.

We received a comment regarding pipeline mitigation measures for soils that have potential frost heave action. As discussed above, the proposed project facilities would be designed and built in accordance with DOT standards, which would provide adequate protection from unstable soils or other hazards that may cause the pipe to move or sustain abnormal loads. Under typical conditions, the pipeline would be installed below ground with a minimum depth of cover of 3 feet. In agricultural areas, cover would extend to 4 feet. In the project area, maximum frost penetration ranges from 3 to 4 feet below the surface (USACE, 1992). In addition, it has been documented that heat from oil and gas pipelines warms the surrounding soil (Burgess and Smith, 2001; Dunn et al., 2008; Naeth et al., 1993). This heat may be sufficient enough to influence the depth of frost penetration immediately surrounding the pipe, further reducing any potential impacts from frost heave. Based on this burial depth, our review of the available research studies, and our experience with existing natural gas pipeline projects, we do not anticipate the Project would be impacted by frost heave.

Prime Farmland

The U.S. Department of Agriculture defines prime farmland as “land that has the best combination of physical and chemical characteristics for producing food, feed, fiber, and oilseed crops” (Soil Survey Division Staff, 1993). This designation includes cultivated land, pasture, woodland, or other lands that are either used for food or fiber crops. Areas that are not currently used for agriculture can be designated as prime farmland if they are available for these uses in the future. Urbanized land and open water are excluded from prime farmland. Prime farmland typically contains few or no rocks, is permeable to water and air, is not excessively erodible or saturated with water for long periods, and is not subject to frequent, prolonged flooding during the growing season. Soils that do not meet the above criteria may be considered prime farmland if the limiting factor is mitigated (e.g., artificial drainage). Additionally, states can designate land that does not meet the criteria for prime farmland as farmland of statewide importance. Approximately 68 percent (890.2 acres) of the soils in the project area are considered prime farmland or farmland of statewide importance.

During construction, topsoil and subsoil would be disturbed during grading and trenching activities and the movement of heavy equipment. The potential mixing of topsoil with the subsoil from these activities could result in a loss of soil fertility. To prevent mixing of the soil horizons, topsoil segregation would be performed in residential areas, non-saturated wetlands, croplands, improved pastures, and in any additional areas requested by the landowner. In upland areas, National Fuel would strip topsoil from either the full work area or from the trench and subsoil storage area. In non-saturated wetlands, topsoil would only be segregated within the trench line. The topsoil would be segregated and replaced in the proper order during backfilling and final grading. Implementation of proper topsoil segregation would help to ensure post-construction revegetation success, thereby minimizing loss of crop productivity and the potential for long-term erosion problems.

TABLE B.1.b-1

Summary of Soil Characteristics (acres)

Facility	Total Acres [a]	Prime Farmland [b]	Highly Erodible		Compaction Prone [e]	Shallow Bedrock	Revegetation Concerns [f]
			Water [c]	Wind [d]			
Pipeline Facilities							
Pipeline	1,044.3	711.5	527.1	1.2	304.5	323.0	530.6
EMP-03	24.8	24.8	0.0	0.0	23.7	0.0	0.0
Aboveground Facilities							
Pendleton Compressor Station [g]	15.1	15.1	0.0	0.0	15.1	0.0	0.0
Porterville Compressor Station	8.7	8.7	0.0	0.0	0.8	0.0	0.0
Hinsdale Interconnect	13.4	13.4	0.0	0.0	1.5	0.0	0.0
TGP Interconnect	5.9	5.8	2.8	0.0	5.4	0.0	2.8
Wheatfield Dehydration Facility	11.2	11.2	0.0	0.0	11.2	0.0	0.0
Clermont Interconnect	N/A [g]	N/A	N/A	N/A	N/A	N/A	N/A
XM-10 Tie-In North	0.9	0.0	0.0	0.0	0.3	0.0	0.0
EMP-03 Tie-In	N/A [h]	N/A	N/A	N/A	N/A	N/A	N/A
Line X Tie-In	N/A [h]	N/A	N/A	N/A	N/A	N/A	N/A
XM-10 Abandoned Meter Station	0.5	0.5	0.0	0.0	0.5	0.0	0.0
Ancillary Facilities							
Access Roads	90.6	21.5	34.8	0.4	12.5	41.8	35.0
Staging/Contractor Yards	91.6	77.7	5.2	0.0	15.2	0.0 [i]	5.2
Project Total	**1,307.0**	**890.2**	**569.9**	**1.6**	**390.7**	**364.8**	**573.6**

Sources: Soil Survey Staff, 2015a and 2015b

[a] Values within rows do not add up to the totals listed for each facility due to the fact that soils may occur in more than one characteristic class or may not occur in any class listed in the table.

[b] As designated by the NRCS. Includes soils that considered prime if a limiting factor is mitigated (e.g., artificial drainage) and farmland of statewide importance.

[c] Includes land in capability subclasses IVe through VIIe and soils with an average slope greater than or equal to 9 percent.

[d] Includes soils in wind erodibility groups 1 and 2.

[e] Includes soils in somewhat poor, poor, and very poor drainage classes with surface textures of sandy clay loam or finer.

[f] Includes coarse-textured soils (sandy loams and coarser) that are moderately well to excessively drained.

[g] N/A = not applicable; construction impacts for the Clermont Interconnect are included in the in Mainline Pipeline ATWS.

[h] N/A = not applicable; construction impacts for the EMP-03 Tie-Ins to X-North and XM-10 are included in the EMP-03 workspace.

[i] The proposed access roads and staging/contractor yards may have shallow bedrock, but trenching operations would not be performed at these project facilities.

Although the soils are not designated as prime farmland by the NRCS, approximately 8.0 acres of farmland of statewide importance would be permanently converted to industrial uses for the operation of the Pendleton Compressor Station. National Fuel would compensate landowners for the loss of land that is permanently removed from agricultural production.

Erosion

Erosion is a continuing natural process that can be accelerated by human disturbance. Factors such as soil texture, structure, slope, vegetation cover, rainfall intensity, and wind intensity can influence the degree of erosion. Soils most susceptible to erosion by water are typified by bare or sparse vegetation cover, non-cohesive soil particles with low infiltration rates, and moderate to steep slopes. Wind-induced erosion often occurs on dry soil where vegetation cover is sparse and strong winds are prevalent. Approximately 44 percent (569.9 acres) of the soils that would be affected by construction are considered highly water erodible. Less than 1 percent (1.6 acres) of the soils are highly susceptible to wind erosion.

To minimize or avoid potential impacts due to soil erosion and sedimentation, National Fuel would utilize the erosion and sedimentation controls outlined in its ESCAMP. Temporary erosion controls, including slope breakers and sediment barriers (e.g., hay bales and silt fences), would be installed following initial ground disturbance to control runoff and prevent sediment transport off the construction right-of-way. Temporary erosion controls would be maintained until the project area is successfully revegetated. Permanent erosion controls would be installed, as necessary, to ensure the successful restoration of the project area.

Compaction Potential

Soil compaction modifies the structure and reduces the porosity and moisture-holding capacity of soils. Construction equipment traveling over wet soils could disrupt the soil structure, reduce pore space, increase runoff potential, and cause rutting. The degree of compaction depends on the moisture content and soils texture. Fine-textured soils with poor internal drainage that are moist during construction are the most susceptible to compaction. Approximately 30 percent (390.7 acres) of the soils that would be affected by the Project are considered prone to compaction.

National Fuel would minimize compaction and rutting impacts during construction in soft or saturated soils by using measures outlined in its ESCAMP, including the use of low-ground-weight equipment and/or by temporary installation of timber equipment mats. The topsoil and subsoil would be tested for compaction in all agricultural and residential areas disturbed by construction. Severely compacted agricultural areas would be mitigated through the use of deep tillage operations during restoration activities using a paraplow or similar implement. In areas where topsoil segregation occurs, plowing with a paraplow or other deep tillage implement to alleviate subsoil compaction would be conducted before replacement of the topsoil. Soil compaction mitigation would also be performed in severely compacted residential areas.

Shallow Bedrock

As discussed above in section B.1.a., approximately 25 percent of the proposed pipeline routes cross areas with bedrock at depths of less than 60 inches. Construction through soils with shallow bedrock could result in the incorporation of bedrock fragments into surface soils. Introducing rocks to the surface soil horizon could reduce soil moisture-holding capacity, resulting in a reduction of soil productivity. Additionally, some agricultural equipment could be damaged by contact with large rocks. Rocks at the surface and in the surface soil horizon could be encountered during grading, trenching, and backfilling.

The introduction of subsoil rocks into agricultural topsoil would be minimized by segregating topsoil from trench spoil and replacing topsoil during cleanup and restoration. National Fuel would make diligent efforts to remove excess rock from at least the top 12 inches of soils to the extent practicable in cultivated and rotated croplands, hayfields, pastures, and residential areas as well as other areas at the landowner's or land managing agency's request. If stones are brought to the surface during decompaction, National Fuel would remove excess rocks greater than 4 inches in size from surface soils disturbed by construction. In addition, rock would not be returned to the trench any higher than 24 inches below the exposed (i.e., topsoil-stripped) construction surface in agricultural areas.

Revegetation

Successful restoration and revegetation are important for maintaining soil productivity and protecting the underlying soil from potential damage, such as erosion. The revegetation potential of soils crossed by the Project was evaluated based on the soil surface texture and drainage class. Soils that have a coarse surface texture and are moderately well to excessively drained may prove to be difficult to revegetate because drier soils have less water to aid in seed germination and the eventual establishment of new vegetation. The coarser-textured soils also have a lower water holding capacity following precipitation, which could result in moisture deficiencies in the root zone and create unfavorable conditions for many plants. The clearing and grading of soils with poor revegetation potential could result in a lack of adequate vegetation following construction and restoration of the right-of-way, which could lead to increased erosion, a reduction in wildlife habitat, and adverse visual impacts. Approximately 44 percent (573.6 acres) of the soils that would be affected by the Project are considered to have revegetation concerns.

National Fuel would apply soil amendments, as necessary, to create a favorable environment for the re-establishment of vegetation. National Fuel would incorporate revegetation recommendations such as seed mixes and application rates (to be provided by the local soil conservation authorities during the permitting process) into its Pennsylvania and New York State Pollution Discharge Elimination System General Permits. National Fuel would conduct post-construction monitoring, at least 2 years in uplands and 3 years in wetlands, to ensure successful revegetation (see section B.3.a).

Soil Contamination

Contamination from spills or leaks of fuels, lubricants, and coolant from construction equipment could adversely impact soils. However, the impacts of such contamination are typically minor because of the low frequency and volumes of spills and leaks. Measures outlined in National Fuel's ESCAMP would be implemented to reduce potential impacts on soils from spills of the hazardous materials used during construction. These measures include regularly inspecting equipment to ensure it is in good working order, properly training employees regarding the handling of fuels and other hazardous materials, implementing proper cleanup protocols, and promptly reporting any spills to the appropriate agencies.

We received multiple comments regarding the potential disturbance of contaminated soils and groundwater at the Frontier Chemical Waste Process, Inc. site located at 7025 Townline Road, Pendleton, New York. Based on the revised EMP-03 pipeline alignment, the pipeline would avoid the site by approximately 1,000 feet and, therefore, pipeline construction would not affect the contaminated materials at the site.

Implementation of the measures outlined in National Fuel's ESCAMP would minimize soil impacts, ensure effective revegetation of disturbed areas, and reduce the potential impacts on soils from spills of hazardous materials used during construction and manage contaminated soils should they be encountered. Given the impact minimization and mitigation measures described above, we conclude that soils would not be significantly affected by construction and operation of the Project.

2. Water Resources

a. Groundwater Resources

In Pennsylvania, the Project would cross unconsolidated sand and gravel glacial aquifers, and sandstone and shale bedrock aquifers. Sand and gravel aquifers range from 20 to 200 feet in depth, with some depths exceeding 250 feet. Wells completed in sand and gravel aquifers commonly yield between 100 to 1,000 gallons per minute (gpm), but can exceed 2,300 gpm. Sandstone and shale aquifers are typically located at depths from 80 to 200 feet, but may exceed 400 feet. Wells completed in sandstone and shale aquifers commonly yield 5 to 60 gpm but can exceed 600 gpm. Groundwater quality in bedrock aquifers is potable. Sandstone aquifers typically have less than 200 milligrams/liter total dissolved solids while shale aquifers have between 200 to 250 milligrams/liter total dissolved solids (Penn State, 2007). According to the McKean County Planning Commission (2007), malfunctioning septic systems and illegal dumping sites located near groundwater recharge areas have the potential to contaminate groundwater in these aquifers.

In New York, aquifers are classified as either primary or principal aquifers (NYSDEC, 2015a). Primary aquifers are highly productive and used as water sources for major municipal water supply systems (NYSDEC, 2015b). Principal aquifers are highly productive or have the potential to produce abundant water supplies, but are not currently being intensively used by major municipal systems (NYSDEC, 2015b). No primary aquifers are located in the project area.

The principal aquifers in the project area consist of unconsolidated glacial and alluvial deposits within bedrock valleys that are generally capable of yielding 100 or more gpm of water (see figure B.2.a-1). The recharge area for these aquifers is generally the permeable surface area above the aquifer. Consequently, these aquifers are vulnerable to contamination from the land and activities that occur above them (USGS, 2012).

Principal aquifers in the project area include three bedrock aquifers:

- the Onondaga limestone aquifer;
- the Camillus shale aquifer; and
- the Lockport dolomite aquifer.

These three bedrock aquifers yield small to moderate amounts of water and are not significant sources of public water supply (Niagara County, 2016).

Groundwater is used in the project area for private water supply wells, agriculture, and industry in Pennsylvania (Penn State Cooperative Extension College of Agricultural Sciences, 2007). Groundwater is the major source of potable water in Alleghany and Cattaraugus Counties and is also used for irrigation and livestock (NYSDEC, 2016f). Niagara and Erie Counties rely on surface water obtained from the Niagara River for public water supplies.

Sole Source Aquifers and Wellhead Protection Areas

The U.S. Environmental Protection Agency (EPA) defines a sole or principal source aquifer area as one that supplies at least 50 percent of the drinking water consumed in the area overlying the aquifer. EPA guidelines also stipulate that these areas can have no alternative drinking water source(s) that could physically, legally, and economically supply all those who depend upon the aquifer for drinking water (EPA, 2013a). Based on a review of designated sole source aquifer mapping, the Project would cross one sole source aquifer in New York. The Cattaraugus Creek Basin Aquifer System would be crossed between MP 63.7 and MP 76.5 in Cattaraugus and Erie Counties. No sole source aquifers would be crossed in Pennsylvania (EPA, 2013b).

In New York, source water assessment zones are established around wells used as public water supplies. These zones are separated into the Inner Well Zone and the Outer Well Zone and are used as the boundaries in which potential contamination sources are evaluated. For community water systems, the Inner Well Zone has a minimum radius of 500 feet but can be larger based on pumping rate information. The Outer Well Zone for community water systems is based on groundwater flow towards the well. When reasonable estimates of flow and direction cannot be made, an arbitrary fixed radius of one mile is delineated around the well. For transient non-community water systems, the Inner Well Zone is a fixed radius of 500 feet and the Outer Well Zone is a fixed radius of 1,500 feet (New York State Department of Health, 1999).

In Pennsylvania, wellhead protection areas are established around public water supply wells. Pennsylvania divides these protection areas into three zones: Zone I immediately surrounds a public water system well and has a radius between 100 and 400 feet, depending on site-specific source and aquifer characteristics; Zone II is typically defined as the area within

0.5 mile of a public water system well and is the capture zone or the region that directly contributes groundwater to a public water system well during pumping; Zone III includes the remaining draining area contributing surface water and groundwater beyond Zone II (PADEP, 2002). Table B.2.a-1 identifies the source water assessment zones and wellhead protection areas that would be crossed by the Project.

TABLE B.2.a-1

Source Water Assessment Zones or Wellhead Protection Areas Crossed

State/County/SWAZs or WHPAs [a]	Begin Milepost Location	Crossing Length (miles)
Pennsylvania		
McKean		
Unknown	Not available	Not available
New York		
Cattaraugus		
Hinsdale Water District	41.3	2.1
Hillview Village	42.5	1.1
Machias Town Water District	63.3	1.2
Country Club Homes	64.0	1.6
Twin Lakes Mobile Homes	64.5	1.1
Arrowhead	65.8	0.3
Delevan Village	66.8	2.1
Camp Duffield	NA	NA

Data sources: Cattaraugus County Health Department (Crawford, 2015); Allegany County Health Department (Shaw, 2015); Erie County Department of Health (Funke, 2015); Town of Sardinia (Degman, 2015); Niagara County Health Department (Gwozdek, 2015); and PADEP (Berkey, 2015).

[a] SWAZ = source water assessment zone
WHPA = wellhead protection area

Public and Private Water Supply Wells

Public and private water supply wells within the project area were identified based on landowner contacts, data from the Pennsylvania Department of Conservation and Natural Resources (PADCNR) Pennsylvania Groundwater Information System (2014a), and a review of registered water wells with the NYSDEC (2014c). Pennsylvania and New York agencies would not provide the locations of public water supply wells due to national security concerns. Table B.2.a-2 summarizes the private water supply wells identified within 150 feet of the project area. No public water supply wells were identified within 150 feet of the project area.

TABLE B.2.a-2

Private Water Supply Wells within 150 Feet of the Project [a]

Milepost	County, State	Resource ID	Direction from Workspace	Distance from Workspace (feet) [b]
5.2	McKean, PA	SP91	Southwest	112
19.9	McKean, PA	SP89	West	110
39.9	Cattaraugus, NY	SP84	Within	within
43.2	Cattaraugus, NY	SP211	Northeast	84
59.6	Cattaraugus, NY	SP182	West	136
63.8	Cattaraugus, NY	CT1059	West	100
65.0	Cattaraugus, NY	SP198	West	56

[a] Based on surveys and data collected from the PADCNR, Pennsylvania Groundwater Information System, and NYSDEC.
[b] Distance measured as perpendicular offset distance from workspace, estimated with GIS using coordinate data.

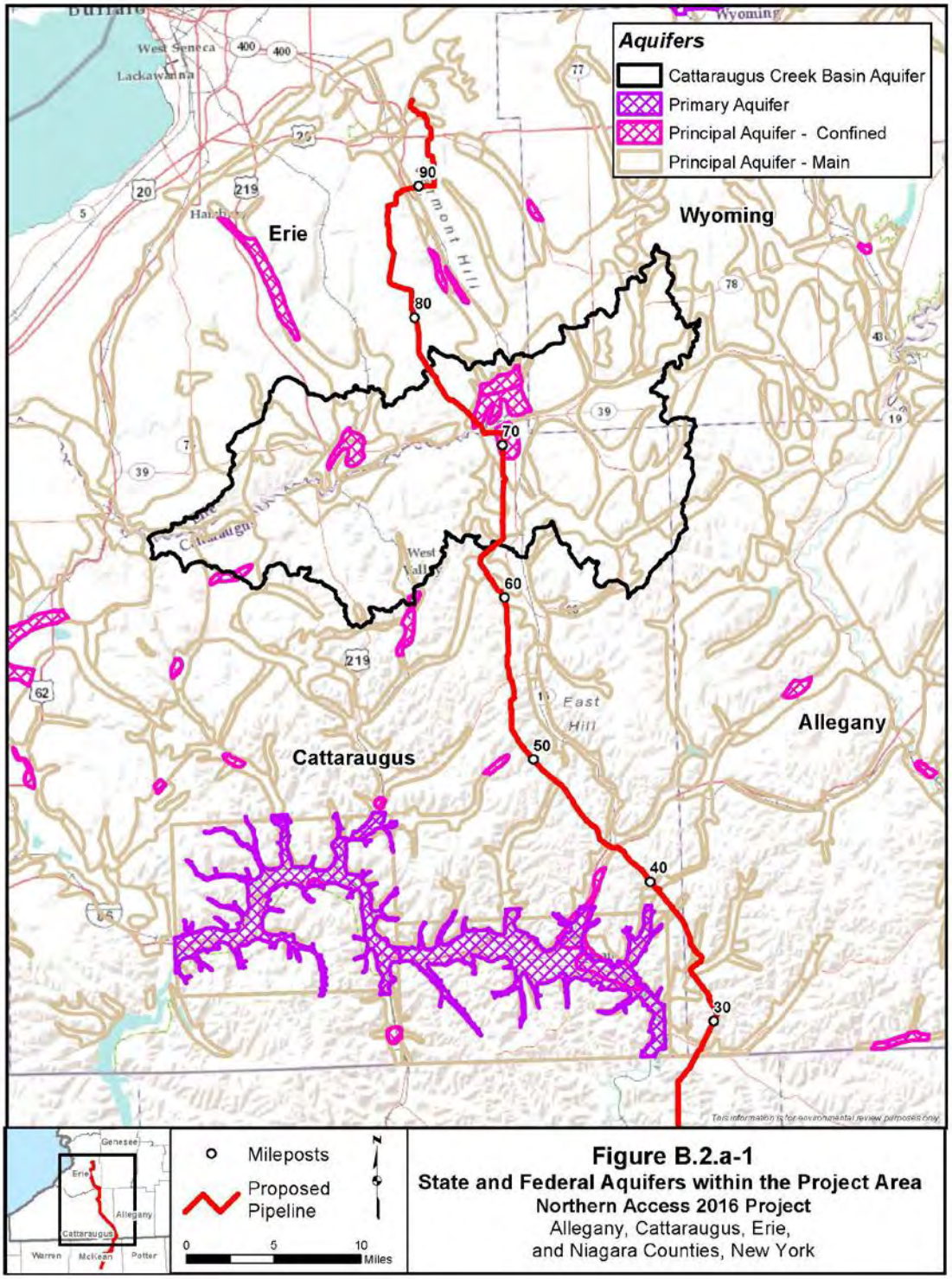

Figure B.2.a-1
State and Federal Aquifers within the Project Area
Northern Access 2016 Project
Allegany, Cattaraugus, Erie,
and Niagara Counties, New York

As shown in Table B.2.a-2, seven private water supply wells are within 150 feet of the project limits. National Fuel stated that pre- and post-construction flow rate and water quality tests would be conducted with the landowner's permission. Additionally, National Fuel has stated it would make the necessary repairs and/or replacements to restore water supply systems to their pre-construction capacity if an existing well is adversely affected during construction. National Fuel would provide a temporary potable water source until the well could be repaired or replaced. To ensure water supply wells are not impacted by construction activities, **we recommend that:**

- **<u>Within 30 days of placing the facilities in service</u>, National Fuel should file with the Secretary a report describing any complaints it received regarding well yield or water quality, the results of any water quality or yield testing that was performed, and how each complaint was resolved.**

Impacts and Mitigation

Pipeline construction activities are not likely to result in significant impacts on groundwater resources because the majority of construction would involve shallow, temporary, and localized excavation. However, trench excavation could intersect the water table in low-lying areas where groundwater is near the surface (e.g., wetlands). Groundwater resources could also be temporarily affected due to changes in overland flow and recharge caused by clearing and grading of the project right-of-way. Blasting could affect nearby springs or wells. In addition, near-surface soil compaction caused by heavy construction vehicles could reduce the soil's ability to absorb water in these isolated areas. During construction, local water table elevations could be affected by trenching trench dewatering and backfilling, which could temporarily affect wells near the construction area.

The direct and indirect impacts described above would be temporary and would not significantly affect groundwater resources. Impacts would be avoided or minimized by the use of construction techniques contained in National Fuel's ESCAMP (e.g., temporary and permanent trench plugs). Where trench dewatering would be required, trench water would be discharged into well-vegetated upland areas to allow the water to infiltrate back into the ground, thereby minimizing any long-term impacts on the water table.

Blasting, if necessary, would be conducted by licensed contractors utilizing appropriate safety precautions. National Fuel would follow landowner notification requirements and take precautions to prevent and/or minimize flying rock and environmental impacts. Blasting is not anticipated to be necessary within 150 feet of any water wells.

Upon completion of construction, National Fuel would restore the ground surface as closely as practicable to original ground contours and revegetate the right-of-way to ensure restoration of preconstruction overland flow and recharge patterns. National Fuel would also conduct compaction testing in residential and agricultural areas and mitigate severely compacted soils through the use of deep tillage operations to increase the water infiltration and groundwater recharge.

One commenter expressed concern about the Project encountering contaminated soils and water. Based on information from the PADEP (2015c) and the NYSDEC (2014b), the project facilities would not cross or otherwise disturb any sites within known groundwater contamination in Pennsylvania or New York. If, based on visual and/or olfactory indicators, contaminated soils are encountered during construction, National Fuel would implement measures outlined in the Unanticipated Hazardous Waste Discoveries section of National Fuel's Spill Prevention and Response Procedures**.** These measures include:

- recognizing possible contamination (i.e., presence of rusted containers, stained soils, gasoline or other odors, sheen on groundwater, oily residues);
- stopping work immediately in the vicinity of any suspected contamination;
- restricting access to the area until appropriate notifications are made to National Fuel's EI and Environmental Manager;
- documenting the event starting with discovery;
- contacting a qualified consultant or testing lab, and determining the extent and nature of the contamination;
- notifying appropriate agencies (i.e., NYSDEC Region 8, PADEP Northwest and/or Southwest Region); and
- developing and implementing a site-specific plan for handling the contamination.

Several commenters also expressed concern about hazards of toxic emissions settling into soil, groundwater, and wetlands. One commenter expressed specific concerns relating to formaldehyde being deposited near compressor stations. Refer to section B.8 for information regarding emissions resulting from operation of project facilities.

Contamination from spills or leaks of fuels, lubricants, and coolant from construction equipment could adversely affect groundwater resources. However, the impacts of such contamination are typically minor due to the low frequency and volumes of spills and leaks. Measures outlined in National Fuel's Spill Prevention and Response Procedures would be implemented to reduce potential impacts from spills of the hazardous materials used during construction. These measures or standards include:

- proper training of all employees;
- equipment would be in good operating order and inspected regularly;
- trucks transporting fuel to on-site equipment would travel only on approved access roads;
- no refueling or overnight parking of equipment within 100 feet of a wetland or waterbody;

- secondary containment for any pumps operating within 100 feet of a waterbody;
- storing hazardous liquids in secondary containment systems;
- no concrete coating activities within 100 feet of a wetland or waterbody, unless the location is an existing industrial site designated for such use or if approved by an EI as the only reasonable alternative and appropriate steps to prevent spills are taken; and
- prompt and effective cleanup of any spills using absorbent and barrier materials for the rapid containment and recovery of spilled materials, and reporting spills and unanticipated discoveries of contamination**.**

National Fuel would not install any condensate collection or storage facilities in aquifer areas. However, it is likely that one or more MLVs would be located within aquifers areas due to federal requirements that dictate valve spacing. These valves would allow for quick isolation and evacuation of the pipeline in the event of an emergency. As currently proposed, the pipeline would be receiving "pipeline quality" gas. If gas quality changes in the future that would result in a more condensate rich makeup, National Fuel would utilize a blowdown separator to insure that gas vented during blowdown events would not result in venting of condensates to the environment.

As discussed above, the project workspace would be within several wellhead protection areas in Pennsylvania. The PADEP would not release information pertaining to the number or locations of these protection areas due to concern for public safety/security concerns. However, any impacts associated with pipeline construction would be temporary, and National Fuel plans to follow common pipeline and aboveground facility construction procedures.

Based on National Fuel's proposed construction techniques and the implementation of minimization and mitigation measures, as well as our recommendation, we conclude that construction and operation of the Project would not significantly impact groundwater resources in the project area.

b. Surface Water Resources

A total of 261 waterbodies were identified within the project area, including 79 perennial streams, 102 intermittent streams, 78 ephemeral streams, and 2 dry ditches. Based on field surveys, of the 261 waterbodies identified during surveys, 206 waterbodies would be crossed by the Project, including 72 in Pennsylvania and 134 in New York. The remaining 57 waterbodies are contained within the project workspace but would not be physically crossed by the pipeline centerline.

The 72 waterbodies crossed in Pennsylvania include 18 intermediate crossings (crossing width between 10 and 100 feet) and 54 minor crossings (crossing width less than 10 feet). The Project would cross 134 waterbodies in New York, including 48 intermediate crossings and 86 minor crossings. A total of 69 waterbodies are located along access roads.

Additional information, including the milepost location and the proposed crossing methods for all waterbodies that would be crossed or otherwise affected by the Project are provided in appendix E. Based on an 8 digit hydrologic unit code, the project facilities are located within four watersheds: the Upper Allegheny; Cattaraugus; Buffalo-Eighteenmile; and Niagara (USGS, 2015).

Water Classification

State waters in Pennsylvania and New York are classified by designated use. Designated uses in Pennsylvania are:

- aquatic life – including maintenance and propagation of cold water fishes, warm water fishes, migratory fishes, and maintenance of stocked trout;
- water supply – including potable water supply (used by the public), industrial water supply, livestock water supply, wildlife water supply, and irrigation;
- recreation and fish consumption – including boating, fishing, water contact sports, and esthetics;
- special protection – including high quality waters and exceptional value waters; and
- other – navigation (the use of water for the commercial transfer and transport of persons, animals, and goods) (Pennsylvania Code of State Regulations, 2009).

In New York, designated uses are classified as:

- AA or A – source of drinking water;
- B – used for swimming and other contact recreation, but not for drinking water;
- C – waters that support fisheries and are suitable for non-contact activities; and
- D – lowest classification.

Waters with classifications A, B, and C may have additional standards of (T), (TS) which indicate that they may support trout populations, or may support trout spawning (NYSDEC, 2016c).

The project facilities would not affect any National Wild or Scenic Rivers (National Wild and Scenic Rivers System, 2015). No segments of waterbodies crossed by the Project are included on the National Rivers Inventory list (National Park Service [NPS], 2011).

Section 303(d) of the Clean Water Act requires that each state review, establish, and revise water quality standards for the surface waters within the state. States develop monitoring and mitigation programs to ensure that water standards are attained as designated. Waters that fail to meet their designated beneficial use(s) are considered impaired and are listed under a state's 303(d) list of impaired waters. The Project would cross one impaired water, an unnamed tributary to Bull Creek, in Niagara County, New York. The impairment is listed as aquatic toxicity of unknown source (EPA, 2014a; EPA, 2015a; EPA, 2015b; NYSDEC, 2014b; NYSDEC, 2016a; PADEP, 2014; PADEP, 2015c).

No surface water protection areas or potable surface water intakes were identified within the vicinity of the Project; and the majority of potable water for McKean County, Pennsylvania, and Allegany and Cattaraugus Counties, New York is from groundwater (Fleeger, 1999; NYSDEC, 2009). The main water supply for Erie and Niagara Counties, New York is the Great Lakes (NYSDEC, 2009) which would not be affected by the Project.

Impacts and Mitigation

Numerous commenters expressed general concern about stream crossings. Pipeline construction could affect surface waters in several ways. Clearing and grading of stream banks, in-stream trenching, trench dewatering, and backfilling could affect waterbodies through modification of existing aquatic habitat, an increased rate of in-stream sediment loading, increased turbidity levels, reduced dissolved oxygen concentrations, and introduction of chemical discharges from fuels/lubricants.

The clearing and grading of the waterbody banks would disturb the riparian vegetation and soils, exposing the waterbodies to erosion/deposition. Heavy equipment used during construction could compact upland and riparian soils, which could reduce infiltration and cause greater runoff to waterbodies. Refueling of vehicles and storage of fuel, oil, or other hazardous materials near surface water and spills from equipment working in waterbodies could create a potential for contamination, which, if a spill were to occur, could degrade downstream water quality and aquatic habitat.

The greatest potential impacts of pipeline construction would result from an increase in sediment loading to surface waters and an increase in internal sediment loading due to channel/floodplain instability as a result of a change in erosion/deposition patterns. The level of impact from the Project on surface waters would depend on the duration of construction activities, precipitation events, sediment loads, stream area/velocity, channel integrity, and bed material.

The highest levels of sediment would be generated by the wet open-cut crossing method, which National Fuel plans to use for streams larger than 25 feet wide where dry crossing and HDD or conventional bore methods are not feasible. The wet open-cut method is proposed for one waterbody crossing at Buffalo Creek in Erie County, New York. Open cut with diversion is proposed as a contingency plan for four other waterbodies, two in Pennsylvania and two in New York. Waterbody construction procedures are discussed in more detail in section A.7.b. The amount of sediment would depend on the characteristics at the crossing location, including depth and width of the stream, which affects mixing of the sediment plume in the water column. It would also be influenced by the current velocity and local turbulence at and downstream of the crossing location; concentrations of suspended sediment initially at the crossing location and at some distance downstream; particle diameter; specific weight; and settling velocity of the excavated and backfilled materials. Turbidity usually peaks during trench excavation and backfilling and decreases rapidly when the streambed disturbance ceases.

Less sediment would be generated where dry crossing methods (e.g., flume or dam and pump) are employed. At the 195 crossings where dry crossing methods would be used, temporary construction-related impacts would be limited primarily to short periods of increased turbidity during the installation of the upstream and downstream dams, and following installation of the pipeline when the dams are pulled and flow across the restored work area is re-established.

Direct impacts on the five waterbodies crossed by the HDD method would be avoided unless an inadvertent release of drilling mud occurred directly or indirectly into the waterbody. Table B.2.b-1 summarizes the waterbodies that would be crossed by the HDD method; additional information for each waterbody crossing is provided in appendix A. Although drilling mud consists of nontoxic materials, if drilling mud were released into a waterbody in large quantities, it could affect fisheries or other aquatic organisms by causing turbidity in a waterbody, temporarily coating the waterbody bed with a layer of clay, and/or impacting fish gills (see section B.3.b). The probability of an inadvertent release is greatest when the drill bit is working near the surface (i.e., near the entry and exit points). Because the staging areas for the HDDs would be set back from the banks of the waterbodies, the potential for an inadvertent release to occur in the water would be minimized. To further minimize potential impacts of inadvertent releases of drilling fluids, National Fuel would implement the measures identified in its *Inadvertent Return Contingency Plan for Horizontal Directional Drilling*. These measures include:

- visually inspecting the drill path for evidence of a release;
- monitoring the use and return of the drilling fluids during the drill process;
- storing containment equipment on-site including portable pumps, earth moving equipment, hay bales, and silt fencing; and
- identifying the appropriate team members and regulatory agencies such as the FERC, NYSDEC, PADEP, USACE, U.S. Fish and Wildlife Service (FWS) New York Field Office, and/or Pennsylvania Fish and Boat Commission (PFBC), as appropriate, if a release occurs.

We reviewed National Fuel's *Inadvertent Return Contingency Plan for Horizontal Directional Drilling* and find it acceptable. National Fuel has proposed open cut crossings with diversion as a contingency in the event the HDD fails. However, National Fuel has not provided site-specific crossing plans if an HDD crossing is unsuccessful. Therefore, **we recommend that:**

- **<u>In the event of the failure of any waterbody HDD</u>, National Fuel should file with the Secretary a site-specific open-cut or other crossing plan(s) for review and approval by the Director of OEP. National Fuel should develop the plans in consultation with the USACE, and the plans should include scaled drawings identifying all areas that would be disturbed by construction and a description of the mitigation measures that would be implemented to minimize effects on water quality and in-stream resources.**

TABLE B.2.b-1

Waterbodies Crossed by Horizontal Directional Drill

State/County	Waterbody Crossed	Waterbody Width (feet)	HDD Entry Milepost	HDD Exit Milepost	HDD Length (feet)
Pennsylvania					
McKean	Allegheny River	80	18.1	17.8	1,452
New York					
Cattaraugus	Ischua Creek	90	43.1	43.4	1,350
	Ischua Creek	40	62.6	62.2	1,620
Erie	Cazenovia Creek	80	89.4	89.0	2,143
	UNT to East Branch Cazenovia Creek	3	89.4	89.0	2,143
	UNT to Cazenovia Creek	2	89.4	89.0	2,143
	Buffalo Creek	60	96.8	96.5	1,135

UNT = unnamed tributary

Sixty-nine waterbodies would be crossed by access roads using bridges or existing culverts. Three crossings would require modifications to existing culverts. National Fuel would use bridges designed to withstand and pass the highest flow expected to occur while the bridge is in place. Where necessary, culverts would be aligned to prevent bank erosion and streambed scour. Additionally, if appropriate, National Fuel would install energy dissipating devices downstream of culverts to aid in scour prevention.

Long-term impacts associated with pipeline operations and maintenance would be relatively minor and limited to periodic clearing of the vegetation within the permanent right-of-way at waterbody crossings. To allow for riparian areas to revegetate, clearing within 25 feet of waterbodies would be limited to a 10-foot-wide corridor over the pipeline being maintained in a herbaceous state, and trees within 15 feet of the pipeline with roots that could compromise the integrity of the pipeline coating being selectively cut and removed.

National Fuel would minimize impacts on waterbodies by implementing measures outlined in its ESCAMP. These measures include:

- completing in-stream work between June 1 and November 30 in coolwater and warmwater fisheries, and between June 1 and September 30 in coldwater fisheries, unless expressly permitted or required by appropriate agencies to cross the stream during another time;

- locating extra workspaces that are in undisturbed lands at least 50 feet back from waterbody boundaries unless a reduced setback is requested with sufficient justification on a site-specific basis (see section A.7);

- requiring temporary erosion and sediment control measures to be installed across the construction right-of-way as necessary to prevent the flow of spoil or heavily silt-laden water into any waterbody;

- maintaining adequate flow rates throughout construction to protect aquatic life and prevent the interruption of existing downstream uses;
- designing and maintaining equipment bridges to prevent soil from entering the waterbody;
- restricting spoil placement near surface waters to the construction right-of-way at least 10 feet from the water's edge or in other approved additional extra workspaces away from the water's edge; and
- mitigating the degree of sedimentation and turbidity by limiting the duration of instream construction activities (typically 24 to 48 hours).

The NYSDEC commented that all aquatic resources should be crossed using the HDD method to the greatest extent possible due to the minimization of land disturbance and the reduction of erosion and sedimentation. Though HDD can be a viable option for crossing aquatic resources, the moderate to steep terrain encountered along much of the project route makes it impractical to use HDD as a crossing method for many of the waterbodies. Additionally, HDD does pose a potential risk to aquatic resources due to potential for inadvertent returns. The majority of crossings are minor waterbodies and National Fuel plans to use the dry open cut construction method for them which would pose little risk to the aquatic resources and would be completed within 24 hours. HDD crossings can require several days, to weeks or even months for larger or more problematic crossings. Also, the workspaces required for HDD installation can require a much larger footprint than other crossing methods used for minor waterbody crossings. For these reasons we do not believe that all waterbodies are automatic candidates for HDD crossings.

The McKean County Planning Commission identified concern about the crossings of Potato Creek (MP 12.8) and Oswayo Creek (MP 27.7) due to potential habitat for the blue-spotted salamander and the eastern hellbender. These species are further discussed in section B.4.

Water Use for HDDs and Hydrostatic Testing

Under DOT regulations (49 CFR 192), National Fuel is required to verify the integrity of the piping associated with the project facilities before placing them into service by conducting hydrostatic testing. This testing involves filling the pipeline with water, pressurizing it, and then checking for pressure losses due to pipeline leakage. Table B.2.b-2 summarizes the quantity and sources of water that are proposed for the hydrostatic testing of the project facilities. Additionally, the drilling fluid used during the HDD operations would also require large volumes of water. Table B.2.b-3 summarizes the volumes of water and sources for the proposed HDDs. These volumes are in addition to the volumes required for pipeline testing. Each HDD segment would be tested three times; once prior to pullback operations, once after pullback is complete, and a third time as part of the larger pipeline segments listed in table B.2.b-2.

National Fuel would implement measures outlined in its ESCAMP to minimize impacts on waterbodies during withdrawals including:

- screening the intake hose to minimize entrainment of fish;
- maintaining adequate flow rates to protect aquatic life, provide for all waterbody uses, and provide for downstream withdrawals of water by existing users; and
- locating the test manifolds outside wetlands and riparian areas to the maximum extent possible.

TABLE B.2.b-2

Hydrostatic Test Water Source and Discharge Locations

Begin Milepost	End Milepost	Water Source	Withdrawal Location (milepost)	Approximate Volume (gallons)	Discharge Location (milepost)
MAINLINE PIPELINE					
Pennsylvania					
0.0	13.6	Private wells [a]	0.2	1,587,387	0.2
13.6	34.1	Allegheny River	18.0	2,404,482	18.1
New York					
34.1	45.9	Oil Creek	42.4	1,381,351	42.4
45.9	74.4	Cattaraugus Creek	71.5	3,336,313	71.5
74.4	96.4	Buffalo Creek	96.3	2,575,400	96.3
EMP-03 Pipeline					
0.0	1.2	Bull Creek	0.2	131,044	0.2
1.2	2.1	Bull Creek	2.1	46,092	2.1
ABOVEGROUND FACILITIES					
Pendleton Compressor Station		Municipal Water	N/A	<40,000	On-site or trucked off-site
Porterville Compressor Station		Municipal Water	N/A	<40,000	On-site or trucked off-site
Wheatfield Dehydration Facility		Municipal Water	N/A	<40,000	On-site or trucked off-site
Hinsdale M&R Station		Municipal Water	N/A	<40,000	On-site or trucked off-site
Wales M&R Station		Municipal Water	N/A	<40,000	On-site or trucked off-site
			Total (maximum)	11,284,933	

[a] Private wells are owned by Seneca Resources Corporation, an affiliate of National Fuel; the Corporation has granted permission to use these wells.

TABLE B.2.b-3

Water Required for Horizontal Directional Drills

			Drilling Mud Water		Hydrostatic Testing	
HDD Name	Begin Milepost	End Milepost	Source	Volume (gallons)	Source	Volume (gallons)
Allegheny River HDD	17.9	18.1	Allegheny River or Municipal Source	47,100	Allegheny River or Municipal Source	56,520
I-86 Hinsdale HDD	42.8	43.1	Ischua Creek or Municipal Source	54,950	Ischua Creek or Municipal Source	65,940
SR 16/Cazenovia Creek HDD	88.9	89.1	Municipal Source	49,062	Municipal Source	58,874
			Total	151,112	**Total**	181,334

Following the completion of hydrostatic testing of the pipeline facilities, storage tanks would be used as surge tanks at each discharge site to allow preliminary settling of sediments. Water would then be filtered and discharged into an energy dissipation device before being discharged into well-vegetated upland areas in a manner and at a rate that would minimize the potential of erosion and sedimentation. This water would infiltrate the soil and recharge the local groundwater system. National Fuel would utilize dissipation devices during discharge activities, and no discharges would be made directly into waterbodies. National Fuel expects that implementing the measures described above would avoid impacts on listed species and that the FWS and NYSDEC would approve withdrawal from Oil Creek and the Allegheny River (which contain federally and/or state-listed mussels). National Fuel would comply with all the conditions included in the hydrostatic test water discharge permits that would be obtained from each state. In order to ensure that the FWS and NYSDEC have approved withdrawal from Oil Creek, **we recommend that**:

- **<u>Prior to construction</u>, National Fuel should file with the Secretary letters of concurrence from the FWS and the NYSDEC demonstrating that water withdrawal from Oil Creek and the Allegheny River is acceptable.**

Because the facilities to be tested would consist of new pipe free of chemicals or lubricants and none of the hydrostatic test water would be chemically treated and would be discharged in an upland area, we conclude that the test water discharges would not impact waterbodies in the project area. In addition, we conclude that implementation of the measures in National Fuel's ESCAMP would adequately minimize the impacts associated with water withdrawals.

Based on National Fuel's proposed construction techniques and implementation of minimization and mitigation measures, including the ESCAMP, we conclude that construction and operation of the Project would not significantly affect surface water resources in the project area.

c. Wetland Resources

Wetland areas that are inundated or saturated by surface or groundwater at a frequency and duration sufficient to support a prevalence of wetland vegetation adapted for life in saturated soil conditions. Wetlands can be a good source of substantial biodiversity and serve a variety of functions that include providing wildlife habitat, recreational opportunities, flood control, and naturally improving water quality.

Existing Wetland Resources

Wetlands in the project area were field delineated in accordance with the USACE 1987 *Wetland Delineation Manual* (Environmental Laboratory, 1987) and the appropriate regional supplements: *Eastern Mountains and Piedmont Region (Version 2.0)* (USACE, 2012a) and *Northcentral and Northeast Region (Version 2.0)* (USACE, 2012b). Wetland community types were assigned based on the classification system developed by Cowardin et al. (1979).

The Project would affect a total of 389 wetland areas comprising one or more of the following wetland cover types: palustrine forested, palustrine scrub-shrub, and/or palustrine emergent. Of those, 359 wetlands are associated with the mainline pipeline route; 3 wetlands are associated with the EMP-03 route; 3 are associated with the Hinsdale Interconnect and pipe or contractor yards; and 19 are associated with access roads. The milepost location, feature ID, hydrologic unit code, wetland type, approximate crossing length, and areal impacts associated with the construction and operation for the wetlands in the project area are provided in appendix E.

Forested wetlands are characterized by woody vegetation that is 6 meters (approximately 20 feet) tall or taller and normally include an overstory of trees, an understory of young trees or shrubs, and an herbaceous layer. Vegetation species associated with the forested wetlands in the project area include green ash (*Fraxinus pennsylvanica*), red maple (*Acer rubrum*), redosier dogwood (*Cornus sericea*), silky dogwood (*Cornus amomum*), common rush (*Juncus effuses*), jewelweed (*Impatiens capensis*), upright sedge (*Carex stricta*), and skunk cabbage (*Symplocarpus foetidus*).

Scrub-shrub wetlands are generally dominated by woody vegetation less than 6 meters tall (approximately 20 feet) tall. Dominant vegetation in the scrub-shrub wetlands in the project area includes pussy willow (*Salix discolor*), redosier dogwood, silky dogwood, upright sedge, bladder sedge (*Carex intumescens*), fringed sedge (*Carex crinita*), jewelweed, and common rush.

Emergent wetlands are characterized by erect, rooted, herbaceous hydrophytes not including mosses and lichens. Dominant vegetation in the emergent wetlands in the project area includes common rush, jewelweed, upright sedge, fringed sedge, reed canary grass (*Phalaris arundinacea*), and arrowleaf tearthumb (*Polygonum sagittatum*).

The NYSDEC commented on the new route and expressed concern for a wetland complex associated with Buffalo Creek. This wetland complex is proposed to be crossed via the HDD that would also cross Buffalo Creek, thereby avoiding impacts on the complex. The NYSDEC also expressed concern about numerous other wetlands that would be crossed by the Project. Several commenters expressed concern that National Fuel did not adequately address the NYSDEC's concerns regarding wetlands along the project route, and several commenters indicated their concern about the number of wetlands associated with the Pendleton Compressor Station site. National Fuel delineated approximately 1.3 acres of wetlands on the Pendleton Compressor Station site. The USACE conducted an onsite Jurisdictional Determination and determined that a portion of the site located in the agricultural field requires additional verification before a wetland determination can be made. The NYSDEC determined there would be no impacts on New York State mapped wetlands from the Pendleton Compressor Station site. National Fuel will address any state or federal concerns during review of its 401 Water Quality Certification permit application with the NYSDEC and USACE.

Impacts and Mitigation

The effects of construction in wetlands would be greatest during and immediately following construction. Wetland construction procedures are discussed in more detail in section A.7.b. The pipeline construction right-of-way would be 75 feet wide in wetlands. The primary impact of construction would be the removal or alteration of wetland vegetation. In emergent wetlands, the impact of construction would be relatively short-term since herbaceous vegetation would regenerate quickly. In scrub-shrub wetlands, the impact on vegetation in temporary work areas would be greater due to the longer time required for woody vegetation to regenerate. In forested wetlands, the impact from construction would take 20 years or longer to regenerate as a forested wetland.

Other impacts on wetlands from construction include temporary changes to wetland hydrology and water quality. Construction could increase the potential for erosion and sedimentation impacts and result in the mixing of the topsoil with the subsoil. This in turn could alter biological activities and chemical conditions within the wetland soils and could affect the reestablishment and natural recruitment of native wetland vegetation. The temporary stockpiling of soil and movement of equipment in wetlands could also compact and furrow wetland soils, which could alter the natural hydrologic patterns, inhibit seed germination, or increase seedling mortality.

Trenching could penetrate or remove impervious soil layers under the wetland and, consequently, drain perched water tables. This could result in drier soil conditions that could affect the reestablishment of wetland vegetation. Construction clearing activities and disturbance of wetland vegetation could also temporarily affect the wetland's capacity to buffer flood flows and/or control erosion. Construction activities also have the potential to temporarily diminish the recreational and aesthetic value of wetlands.

Table B.2.c-1 summarizes the construction and operation impacts on wetlands in the project area. As shown in table B.2.c-1, construction of the project facilities would temporarily impact a total of 89.4 acres of wetlands; 28.8 acres of forested wetlands; 11.8 acres of scrub-shrub wetlands; and 48.8 acres of emergent wetlands.

During operation of the Project, a 10-foot-wide corridor centered on the pipeline would be maintained in an herbaceous state and trees within 15 feet of the pipeline would be selectively cut and removed to protect the pipeline from damage. This would convert 5.2 acres of previously forested wetlands areas to non-forested wetland areas and 1.3 acres of scrub-shrub wetland areas to emergent wetland areas. The conversion from one vegetation cover type to another could result in changes in wetland functions and values. In general, however, it is expected that the affected wetlands would continue to provide important ecological functions such as sediment/toxicant retention, nutrient removal/transformation, flood attenuation, groundwater recharge/discharge, and wildlife habitat.

TABLE B.2.c-1

Summary of Wetlands Affected by Construction and Operation

Facility/State/County	Emergent		Scrub-Shrub		Forested	
	Construction (acres)	Operation (acres)	Construction (acres)	Operation (acres) [a]	Construction (acres)	Operation (acres) [a]
Pipeline Facilities [a]						
Pennsylvania						
McKean	4.1	0.0	4.3	0.5	2.1	0.4
New York						
Allegany	3.1	0.0	1.8	0.2	4.3	0.9
Cattaraugus	16.1	0.0	0.9	0.1	8.5	0.5
Erie	24.4	0.0	2.7	0.4	13.7	3.4
Line EMP-03 [a]						
Niagara	0.3	0.0	1.9	0.2	0.3	0.1
Aboveground Facilities						
Wheatfield Dehydration Facility	0.0	0.0	0.0	0.0	0.0	0.0
Pendleton Compressor Station	0.0	0.0	0.0	0.0	0.0	0.0
Porterville Compressor Station	0.0	0.0	0.0	0.0	0.0	0.0
Hinsdale Interconnect Construction Area	<0.1	0.0	0.0	0.0	0.0	0.0
Access Roads						
Pennsylvania						
McKean	0.1	0.0	0.2	0.0	<0.1	0.0
New York						
Allegany	<0.1	0.0	<0.1	<0.1	0.0	0.0
Cattaraugus	<0.1	0.0	0.3	0.0	0.0	0.0
Port Alleghany Pipe Yard						
Pennsylvania						
McKean	0.1	0.0	0.0	0.0	0.0	0.0
Buffalo Crushed Stone Contractor Yard						
Pennsylvania						
Cattaraugus	0.5	0.0	0.0	0.0	0.0	0.0
PROJECT TOTALS	**48.8**	**0.0**	**11.8**	**1.5**	**28.8**	**5.3**

[a] Operation impacts associated with the pipeline facilities are based on a 10-foot-wide corridor being maintained in an herbaceous state and selective tree cutting within 10 feet of either side of the herbaceous corridor (30-foot-wide corridor). Therefore, there would be no operational impacts on emergent wetlands; operational impacts on scrub-shrub wetlands would be limited to the 10-foot-wide corridor; and permanent forested wetland impacts are based on the 30-foot-wide corridor.

Construction of the Hinsdale Interconnect and EMP-03 and EMP-03 tie-in would result in 0.4 acre of temporary impacts on forested wetlands and 1.9 acres of temporary impacts on scrub-shrub wetlands. Following construction, about 0.2 acre of forested wetland would be allowed to revert to forested wetland, 0.1 acre would be converted to scrub-shrub wetland and <0.1 acre would be converted to emergent wetland. Of the 0.9 acre of scrub-shrub wetland impacted, 1.7 would be allowed to revert to scrub-shrub wetland while 0.2 acre would be converted to emergent wetland. The NYSDEC determined there would be no temporary or operational impacts on wetlands associated with the Pendleton Compressor Station, the Porterville Compressor Station, or the Wheatfield Dehydration Facility. The NYSDEC received

multiple public requests to verify the limits of wetlands at the Pendleton Compressor Station site and conducted a field visit. Based on that visit, the State determined that the portion of the property that would be used for construction of the station was under active agriculture and lacked hydrophytic vegetation. The NYS Freshwater Wetland Act and the 1995 NYS Wetland Delineation Manual specifically exclude agricultural wetlands from their jurisdiction. Since the 20 acre parcel had been planted with crops for at least 2 years, the NYSDEC determined that it could not exercise jurisdiction of any wetlands that might be identified in the agricultural field. The USACE has yet to make a determination as to whether the agricultural fields contain wetlands. If wetlands are present and construction resulted in impacts on these wetlands, National Fuel would be required to mitigate for this loss as part of its section 404 permit from the USACE. Additionally, National Fuel stated that final construction plans are still being drafted for the Porterville Compressor Station site, but that wetland impacts would be avoided during construction.

Construction of access roads would result in temporary impacts to 0.7 acre of scrub-shrub and emergent wetlands. Construction of pipe and contractor yards would result in 0.5 acre of impacts to emergent wetlands. There would be no permanent loss of wetlands associated with access roads, pipe yards, or contractor yards.

National Fuel would minimize the potential for wetland impacts by implementing the measures contained in the ESCAMP. These measures include:

- necking down to a 75-foot-wide right-of-way in wetlands;
- segregating up to 12 inches of topsoil from the trench line in unsaturated wetlands;
- temporarily installing mats or timber riprap where necessary to create a stable surface for equipment to minimize soils mixing and disturbance;
- installing trench plugs at the edges of wetlands to prevent subsurface drainage along the pipeline; and
- installing erosion controls as needed to control sedimentation until disturbed soils are adequately stabilized and adjacent upland areas are restored.

Following construction, National Fuel would monitor the revegetation of the affected wetlands annually for 3 years. Revegetation would be considered successful when:

- the affected wetland satisfies the current federal definition for a wetland (i.e., soils, hydrology, and vegetation);
- vegetation is at least 80 percent of either the cover documented for the wetland prior to construction, or at least 80 percent of the cover in adjacent wetland areas that were not disturbed by construction;

- if natural rather than active revegetation was used, the plan species composition is consistent with early successional wetland plant communities in the affected ecoregion; and

- invasive species and noxious weeds are absent, unless they are abundant in adjacent areas that were not disturbed by construction.

If after 3 years, revegetation is not successful, a remedial revegetation plan would be developed and implemented in consultation with a professional wetland ecologist.

Inadvertent spills of fluids used during construction, such as fuels, lubricants, and solvents, could contaminate wetland soils and vegetation. To minimize this, hazardous materials, chemicals, lubricating oils, and fuels used during construction would be stored in upland areas at least 100 feet from wetland boundaries. If no other practical alternative exists, the EIs can approve refueling within 100 feet of a wetland, provided that additional precautions such as continual monitoring of fuel transfer, secondary containment structures, and utilization of spill kit readiness are employed. Concrete coating activities would be performed at least 100 feet from wetland boundaries unless the location is an existing industrial site designated for such use.

In order to address permanent wetland impacts, National Fuel would be required to develop a compensatory mitigation plan as part of the NYSDEC, PADEP, and USACE permitting process. As discussed above, the Project would result in the conversion of 6.6 acres of forested and scrub-shrub wetlands and the temporary impacts on 38.7 acres of forested and scrub-shrub wetlands. The agencies have indicated that compensatory mitigation would be required for both temporary and permanent impacts on forested wetlands. The specific mitigation type and location would be determined by the NYSDEC, PADEP, and USACE.

As discussed above, the Project would primarily result in temporary impacts on wetlands, and would have minimal permanent impact on wetlands. The implementation of the mitigation measures outlined in National Fuel's ESCAMP would minimize wetland impacts and help ensure the success restoration of wetland areas. We conclude that temporary and permanent wetland impacts of the Project would be addressed by National Fuel's implementation of mitigation measures and therefore would not represent a significant impact on wetland resources.

Additional Temporary Workspace in Wetlands and Waterbodies

We reviewed National Fuel's requests to place ATWS in or within 50 feet of certain wetlands and waterbodies. National Fuel identified 61 workspaces that would overlap with delineated wetlands, 33 workspaces within 50 feet of wetlands, 13 workspaces that would be placed in a waterbody, and 20 workspaces within 50 feet of a waterbody. The majority of the workspaces requested in or within 50 feet of a wetland or waterbody are for topsoil segregation in agricultural lands, road or waterbody crossings, or side slope construction. With the exception of the workspaces listed below, we agree that the workspaces are necessary for safe construction of the Project and can be used, with best management practices in place to protect the resources, without causing long-term damage to the wetlands or waterbodies.

Two of the workspaces National Fuel identified as within wetlands are not approved. Workspace 65 at MP 24.8 within wetland W217a is requested for crossing Hanson Hollow Road. We believe this workspace can be configured to avoid clearing the scrub-shrub wetland at this location. Several workspaces are proposed to aid in the crossing of Allen Road and the required topsoil segregation required for the agricultural land adjacent to the road. The workspace proposed in the southeast corner of the proposed crossing of Allen Road (MP 76.7) would impact wetland W19b. We believe that ATWS could be configured to avoid that wetland.

National Fuel has requested ATWS in perennial waterbodies in several locations (MP 5.0 affecting waterbodies S010 and S012; MP 9.9 affecting S248a; and MP 24.9 affecting S244a). Perennial waterbodies have water present year round, making them less suitable for spoil storage or vehicle traffic. Due to potential impacts associated with construction activities in wetlands and in waterbodies, **we recommend that:**

- **<u>Prior to construction</u>, National Fuel should file with the Secretary, for review and written approval from the Director of the OEP, revised project alignment sheets to clarify that the ATWS proposed in wetlands at MPs 24.8 and 76.7 and in waterbodies at MP 5.0, 9.9, and 24.9 have been removed or moved to where the ATWS would be set back at least 10 feet from the water's edge.**

Additionally, we identified 13 ATWS proposed in or within 50 feet of wetlands or waterbodies for which National Fuel did not provide a site-specific justification for modifications to the FERC Procedures (table B.2.c-2). In order to protect these resources from potential construction impacts, **we recommend that:**

- **<u>Prior to construction</u>, National Fuel should file with the Secretary, for review and written approval from the Director of OEP, a revised table B.2.c-2 that demonstrates the ATWS would be properly set back from the feature; or National Fuel should provide additional justification for the workspace locations.**

TABLE B.2.c-2

Additional Temporary Workspace in Wetlands Not Justified

Milepost	Wetland ID	Cover/Stream Class	ATWS Proximity
30.8	W220A	PEM	In wetland
33.3	W309a	PEM	In wetland
33.3	W308a	PEM	Within 50 feet of wetland
80.7	W280a	PEM	In wetland
80.8	W279a	PEM	In wetland
85.6	W29c	PEM	In wetland
94.7	W267a	PEM	Within 50 feet of wetland
95.3	W268a	PEM	In wetland
95.4	W269a	PEM	In wetland
95.7	W270a	PEM	Within 50 feet of wetland
96.4	W315a	PEM	In wetland (HDD pullback)
96.4	W314a	PEM	Within 50 feet of wetland (HDD pullback)
96.4	S272a	Perennial	In waterbody (HDD pullback)

3. Vegetation

Existing vegetation conditions in the project area were identified based on field surveys and a review of aerial photography. The vegetation cover types observed in the project area are described in table B.3-1.

As described in additional detail in section A.4.a, the pipeline facilities would be largely co-located with existing pipeline and powerline rights-of-way. As a result, over half of the project area is comprised of agricultural or open vegetation communities. Open areas within the project area consist primarily of meadow or existing right-of-way. Agricultural lands crossed by the Project are primarily corn, soybeans, or pasture.

TABLE B.3-1

Vegetation Cover Types

Vegetation Cover Type	General Description	Common Species
Forest	Northern hardwood and pine forest	Black cherry (*Prunus serotina*), red maple (*Acer rubrum*), American beech (*Fagus grandifolia*), white ash (*Fraxinus americana*), striped maples (*Acer pensylvanicum*), yellow birch (*Betula alleghaniensis*), American hornbeam (*Carpinus caroliniana*), eastern hemlock (*Tsuga canadensis*), white pine (*Pinus strobus*)
Shrubland	Shrub and sapling-dominated upland	Multiflora rose (*Rosa multiflora*), assorted brambles, cherries (*Prunus* spp.), goldenrod (*Solidago*, spp.), aster (*Aster* spp.)
Open land	Existing right-of-way, meadow	Multiflora rose, assorted brambles (*Rubus* spp.), clover (*Trifolium* spp.), goldenrod, orchardgrass, timothy, Queen Anne's lace (*Daucus carota*) panicgrass (*Panicum* spp.)
Agricultural	Cultivated row crops, hayfield, pasture, orchard, vineyard	Corn (*Zea mays*), soybean (*Glycine max*), alfalfa (*Medicago sativa*), clover, orchardgrass (*Dactylis glomerata*), timothy (*Phleum praetense*), apples (*Malus* spp.), grapes (*Vitis* spp.)
Developed areas	Residential and commercial/industrial	Turf grasses, ornamental shrubs
Wetlands	Emergent, scrub-shrub, forested	Sedges (*Carex* spp.), common rush (*Juncus effusus*), arrowleaf tearthumb (*Polygonum sagittatum*), reed canary grass (*Phalaris arundinacea*), jewelweed (*Impatiens capensis*), pussy willow (*Salix discolor*), redosier dogwood (*Cornus sericea*), silky dogwood (*Cornus amomum*), green ash (*Fraxinus pennsylvanica*), red maple, skunk cabbage (*Symplocarpus foetidus*)

Approximately 50 percent of the vegetation within the project area is forested. These areas consist primarily of larger tracts of upland forest that are dominated by mid-successional and mature hardwood species, and to a lesser extent include coniferous species. Portions of the forested communities have been managed by landowners or professional foresters, but much of the forested land at the southern end of the pipeline route may have regenerated following the cessation of mining practices. A majority of the forests within the project area are adjacent to cleared utility rights-of-way.

Shrublands and developed areas comprise approximately 10 percent of the vegetation communities throughout the project area. Typically, shrubland areas are located along co-located portions of the Project where forest was recently cleared for utility right-of-way but has been allowed to regenerate. Developed areas in the project area have little vegetation cover besides mowed residential and commercial lawns.

a. Exotic or Invasive Species

Exotic plant communities, invasive species, and noxious weeds can out-compete and displace native plant species, thereby negatively altering the appearance, composition, and habitat value of affected areas. Field surveys documented seven species identified by New York and/or Pennsylvania as invasive, including multiflora rose, mugwort (*Artemesia vulgaris*), Japanese knotweed (*Polygonum cuspidatum*), Japanese honeysuckle (*Lonicera japonica*), reed canary grass (*Phalaris arundinacea*), autumn olive (*Elaeagnus umbellata*), and Japanese barberry (*Berberis thunbergii*) within the project area (New York Invasive Species Information Website, 2015; PADCNR, 2015a). Invasive species identified within the project area are typically found at road crossings.

b. Sensitive Vegetation Communities

The NYSDEC identified three sensitive vegetation communities in New York that may be present within 0.5 mile of the Project, including two inland poor fens and one silver maple-ash swamp (NYSDEC, 2014a). The two inland poor fen communities, identified by the NYSDEC as the Route 62 Railroad Swamp and the Brewers Corners Bog area, would be avoided by the Project's current design. The Project would be located approximately 1,700 feet east of the Route 62 Railroad Swamp at its closest point, and no wetlands or waterbodies were identified where the Project crosses near the Brewers Corners Bog. The NYSDEC also identified a silver maple-ash swamp known as the Hempstreet Road Wetlands. National Fuel re-routed the pipeline to avoid this area. The proposed project facilities are not within or near any sensitive vegetation communities in Pennsylvania (PADCNR, 2014a). Given the information above, the Project would not affect any sensitive vegetation communities.

c. Impacts and Mitigation

As summarized in table B.3.c-1, a total of 1,206.1 acres of vegetation would be affected by construction of the Project, including 1,151.2 acres for pipeline facilities and 54.9 acres for aboveground facilities. More specifically, construction of the Project would primarily affect upland forest (594.9 acres), agricultural lands (277.4 acres), and open lands (141.3 acres). Operation of the Project would permanently impact 604.9 acres of vegetation. Of the 604.9 acres of vegetation permanently impacted, 14.1 acres would be permanently converted to industrial use associated with the Wheatfield Dehydration Facility and the Pendleton Compressor Station. Operation of pipeline facilities and new permanent access roads would convert 338.7 acres of upland forest, 1.5 acres of shrub wetland, and 5.3 acres of forested wetland to an herbaceous state due to maintenance of the permanent right-of-way (see section B.2.c for further discussion of wetland impacts).

TABLE B.3.c-1

Vegetation Communities Affected (in acres)

Vegetation Community	Construction Impacts[a]	Operation Impacts[b]
Forest[c]	594.9	338.7
Shrubland	28.0	21.8
Open land	141.3	114.7
Agricultural	277.4	118.9
Developed areas	75.1	10.8
Wetlands	89.4	6.8[d]
Total	**1,206.1**	**604.9**

[a] Total acreage of construction footprint, including permanent easement, construction right-of-way, and ATWS. Does not include roadway or open water.
[b] Total acreage of permanent easement.
[c] Refers to upland forest only. Forested wetland is included in the wetlands acreage. See section B.2.c. for a detailed discussion of wetland impacts.
[d] Total acreage of forested and scrub-shrub wetlands that would be converted to emergent wetland.

Following construction, National Fuel would restore areas impacted by construction (e.g., construction rights-of-way, ATWS, and temporary access roads) to pre-construction conditions and contours. Disturbed areas would be restored in accordance with National Fuel's ESCAMP, all other agency requirements and permit conditions, and landowner requests. Restored areas would be replanted with seed mixes developed by a local agronomist for soils in both Pennsylvania and New York, and Pennsylvania Game Commission (PGC) seeding recommendations would be followed where applicable. Additionally, National Fuel would maintain the permanent right-of-way in accordance with FERC's Plan by routinely mowing vegetation in upland areas at a typical frequency of once every three years.

To minimize impacts on vegetation from operation of aboveground facilities, National Fuel would utilize existing access roads where possible, use the minimum amount of land needed to construct and operate the facilities, and locate facilities within or adjacent to previously disturbed and developed areas, as practical.

Construction activities would include the cutting, clearing, and/or removal of existing vegetation to provide a safe working area for personnel and equipment. In general, these activities would result in the alteration and loss of vegetation and could result in increased soil erosion, changes to surface water flow and infiltration, increased potential for the introduction and establishment of noxious weeds, and a local reduction in available wildlife habitat. Operation of aboveground facilities would result in permanent conversion of vegetation communities to industrial use. The majority of these areas would be fenced in, paved, graveled, and/or utilized for building foundations. Impacts from contractor staging and pipe storage yards would be temporary; areas affected by these project components would be restored to their previous use following construction. A discussion of specific impacts by vegetation community is provided below.

Forest

Forested areas would experience the greatest impact due to the permanent conversion to herbaceous or shrub vegetation within the permanent right-of-way as well as the time required for woody vegetation to revert to pre-construction conditions in temporary workspaces. Of the 594.9 acres of upland forest that would be cleared during construction of the Project, National Fuel would maintain 338.7 acres in an herbaceous state within the permanent right-of-way. In temporary project workspaces, where upland forest would be allowed to regrow, impacts would be long term because re-establishment to pre-construction conditions could take from 10 to over 30 years, depending on the species type.

The NYSDEC and PGC expressed concern relating to forest fragmentation. Adverse impacts from forest fragmentation could include decreased quality of habitat for certain wildlife species, increased light penetration, and loss of soil moisture in the immediate vicinity of areas cleared of mature trees. Disturbance in these areas could also create favorable conditions for colonization by invasive or weedy plant species. A total of approximately 33.3 acres of interior habitat (i.e., forest greater than 300 feet from an existing edge) would be cleared for construction of the Project in Pennsylvania. Of the 33.3 acres impacted, approximately 16.7 acres would be permanently converted to open lands. All forested lands impacted by the Project in New York are either adjacent to existing rights-of-way or are within 300 feet of existing cleared or open areas.

National Fuel would minimize impacts on forested areas by:

- co-locating approximately 69 percent of the mainline pipeline with existing utility rights-of-way;
- limiting the width of the permanently cleared right-of-way to the minimum width necessary to safely operate and maintain the pipeline;
- allowing forested areas cleared for ATWS areas to revert to forested cover; and
- planting forest seed mixes recommended by the PGC following construction.

As mentioned above, infestations of several invasive and noxious weed species occur within the project area. Construction equipment and personnel could transport seeds from invasive plants to non-infested areas. The NYSDEC has authority under Environmental Conservation Law Article 9, Title 17 to regulate the spread of invasive species at project sites regulated by the state. Title 7, Section 110.1 of Pennsylvania Code grants PADCNR jurisdiction over noxious weeds. The PADCNR provided National Fuel with a list of "Invasive Plants in Pennsylvania." As a result, National Fuel committed to excluding species on the list from seed mixes in the overall project area. In a letter to FERC dated April 22, 2015, the FWS recommended that specific invasive plant control methods and post-construction monitoring requirements be developed for the Project (FWS, 2015a). According to FERC's Plan, National Fuel must "develop specific procedures in coordination with the appropriate agencies to prevent the introduction or spread of invasive species, noxious weeds, and soil pests resulting from construction and restoration activities." Because invasive plant control measures have not been developed, **we recommend that:**

- **<u>Prior to construction</u>, National Fuel should file with the Secretary for review and written approval by the Director of OEP, a final invasive plant species plan developed through coordination with the NYSDEC and PADCNR identifying the practices that would be implemented during construction and restoration activities to prevent the introduction and spread of invasive plant species.**

Based on National Fuel's implementation of the minimization and mitigation measures described above and our recommendation, we conclude that construction and operation of the Project would have long-term, but minor impacts on forested vegetation.

Shrubland and Open Land

Impacts on shrub and open land communities would primarily be short-term and would primarily occur within or adjacent to existing rights-of-way. Following construction completion and reseeding of the right-of-way, open lands would typically regenerate by the following growing season. Of the 28.0 acres of shrublands impacted by construction of the Project, approximately 21.8 acres would be converted to open lands in the new permanent right-of-way. The remaining shrublands would be expected to recover to pre-construction conditions within 5 to 7 years. Of the open land affected by construction of the Project, the majority would be returned to a vegetated state and very little would be permanently converted to industrial use. The lands returning to preconstruction condition would be fully restored within 1 to 3 years; however, the area within the permanent right-of-way would be subject to routine maintenance. Given that the majority of permanent impacts on shrublands and open lands would occur in co-located or previously-disturbed areas, we conclude that impacts on these vegetation communities would be minor.

Agricultural

Most impacts on agricultural lands would be short-term. Temporary impacts from construction would include the loss of standing or row crops within the construction work space and the disruption of farming operations for the growing season during the year of construction. The majority of agricultural lands affected by the Project would be allowed to return to preconstruction use; however, 8.0 acres of agricultural lands would be permanently converted to industrial use for the operation of the Pendleton Compressor Station.

Several commenters expressed concern about effects of air emissions on croplands near the proposed Pendleton Compressor Station. As described in detail in section B.8, the aboveground facilities, including the Pendleton Compressor Station, could emit several types of air pollutants. Of the air pollutants generated during operation of the aboveground facilities, particulate matter is the most likely to impact nearby agricultural communities. Particulate matter could be transported by wind and deposited on surfaces in the surrounding area, including the soil surface and crops. Build-up of particulate matter on nearby crops could interfere with photosynthesis, which could lead to decreased crop yields, crop damage, and crop loss. The Project would comply with all applicable air quality standards and dispersion, and appreciable build-up of particulate matter is not expected.

To minimize impacts on agricultural lands, National Fuel would follow measures outlined in its ESCAMP as well as the FERC Plan and Procedures. Such measures include segregating and replacing topsoil following construction, testing and mitigating for any severely compacted soils caused by construction activities, and adhering to recommendations by the NYSDAM. Based on National Fuel's compliance with air quality standards and implementation of the measures described above, we conclude that impacts on agricultural communities from construction and operation of the Project would be less than significant.

Developed Areas

Much of the developed areas within the project area are currently maintained utility rights-of-way. These areas would be re-vegetated with appropriate seed mixes following construction, and therefore would incur only short-term impacts. Residential and commercial areas could experience both short-term and long-term effects such as removal of trees, ornamental shrubs, and maintained lawn areas within the construction and operational rights-of-way. Tree removal would be a long-term impact and could negatively affect aesthetics. National Fuel would work with landowners to develop site-specific mitigation plans that acknowledge landowner preferences and include appropriate compensation. Therefore, we conclude that impacts on developed areas would be temporary and minor.

Wetlands

As discussed in section B.2.c, the Project would result in temporary and permanent impacts on wetlands. Impacts on wetland vegetation would be similar or the same as the upland vegetation impacts described above. In forested wetlands, trees within 15 feet of the pipeline with roots that could compromise the integrity of the pipeline coating would be selectively cut and removed. Herbaceous wetlands and any wetlands within temporary workspace would be restored to pre-construction conditions and contours. Compensatory mitigation as may be required by the USACE would offset permanent impacts on wetlands. Therefore, we conclude that impacts on wetland vegetation communities within the project area would not be significant.

While permanent impacts on vegetation are anticipated, the Project would not permanently impact unique, sensitive, or protected communities or species. Based on National Fuel's construction techniques, the implementation of minimization measures (including our recommendation regarding invasive plant species), and post-construction monitoring, we conclude that construction and operation of the Project would have short-term and minor impacts on non-forested vegetation communities, and long-term, but minor impacts on forested vegetation. These impacts would not be significant.

4. Fisheries and Wildlife

a. Fisheries

The PADEP surface water use classification system and criteria include the following protected use designations related to fisheries: Cold Water Fishes (CWF), Warm Water Fishes (WWF), Migratory Fishes (MF), and Trout Stocking (TSF) (Commonwealth of Pennsylvania, 2011).

The NYSDEC defines eight classifications for the freshwater category that have a designated use for fish: Class AA-Special (AA-S), Class A-Special (A-S), Class AA, Class A, Class B, Class C, Class D, and Class N. Class D waters support fish but typically have low or intermittent flow (NYSDEC, 1993). In New York, coldwater fisheries are identified by designations for Trout Use (T) or Trout Spawning (TS) (NYSDEC, 1993).

As discussed in section B.2.b, a total of 261 waterbodies were identified within the project area, including 79 perennial streams, 102 intermittent stream, 78 ephemeral streams, and 2 dry ditches; 205 of these waterbodies would be crossed by the pipeline, the remainder would be within the workspace. Intermittent and ephemeral streams typically provide limited value or marginal fishery habitat due to restricted water flow regimes, which are likely dependent upon precipitation.

In Pennsylvania, 21 of the 72 waterbodies crossed by the pipeline are classified as coldwater fisheries. Of the 133 waterbodies crossed by the pipeline in New York, 5 streams are coldwater fisheries. Coldwater fisheries within the project area support natural and stocked populations of brook trout (*Salvelinus fontinalis*), brown trout (*Salmo trutta*), and rainbow trout (*Oncorhynchus mykiss*). The remaining waterbodies are warmwater fisheries. Representative fish species that may be found in warmwater perennial streams within the project area include suckers (*Catostomus* spp.), sunfish (*Lepomis* spp.), bass (*Micropterus* spp.), darters (*Etheostoma* spp. and *Percina* spp.), walleye (*Sander vitreus*), and sauger (*Sander canadensis*).

Fisheries of Special Concern and Essential Fish Habitat

Within the project area, fisheries of special concern are considered those waterbodies that possess habitat for protected species, are designated as essential fish habitat, are managed under state fishery regulations, or are part of stocking programs. No federally threatened or endangered fish species were identified in the vicinity of the Project (FWS, 2014, 2015a). The PFBC identified one state-listed endangered fish species (Burbot [*Lota lota*]) known to occur in Potato Creek. No fish species listed by the State of New York as endangered or threatened were identified within the vicinity of the Project (NYSDEC, 2014b). State-listed and candidate fish species are discussed in section B.4.a.

In a letter dated January 4, 2015, the PFBC indicated the following areas crossed by the Project would have timing restrictions for in-stream work due to trout regulations: Cole Creek watershed, Blacksmith Run watershed, Bloomster Hollow watershed, Irons Hollow watershed, and Marvin Creek. In the same letter, the PFBC also recommended work restriction periods for resources that support rare, threatened, or endangered species. These areas include Oswayo Creek and adjacent wetland pools, McCrea Run watershed, the Allegheny River, Kent Hollow watershed, Cloverlot Hollow, Pierce Brook watershed, Potato Creek and adjacent wetland pools, an unnamed tributary to Potato Creek (S70a), and Cole Creek watershed. A complete list of fisheries of special concern by waterbody is provided in table B.4.a-1.

Essential Fish Habitat has not been designated in the vicinity of the Project in Pennsylvania or New York (National Marine Fisheries Service, 2015). Therefore, the Project would have no impact on Essential Fish Habitat.

TABLE B.4.a-1

Fisheries of Special Concern

Facility/ State/ County	Milepost	Waterbody	Fishery Concern[a, b, c, d]	Timing Restriction [e]
Mainline Pipeline				
Pennsylvania				
McKean				
	0.2	Warner Brook	Drains to HQ-CWF, ATW, TNR, STS	NA
	5.0	Unnamed tributary (UNT) to Irons Hollow	Drains to CWF, ATW, TNR, STS	10/1 – 12/31
	5.0	UNT to Irons Hollow	Drains to CWF, ATW, TNR, STS	10/1 – 12/31
	5.1	UNT to Irons Hollow	Drains to CWF, ATW, TNR, STS	10/1 – 12/31
	5.1	UNT to Irons Hollow	CWF, Drains to ATW, TNR, STS	10/1 – 12/31
	5.1	UNT to Irons Hollow	Drains to CWF, ATW, TNR, STS	10/1 – 12/31
	5.5	UNT to Irons Hollow	CWF, Drains ATW, TNR, STS	10/1 – 12/31
	5.8	UNT to Irons Hollow	CWF, Drains to ATW, TNR, STS	10/1 – 12/31
	5.9	UNT to Irons Hollow	Drains to CWF, ATW, TNR, STS	10/1 – 12/31
	6.0	UNT to Irons Hollow	Drains to CWF, ATW, TNR, STS	10/1 – 12/31
	7.1	Marvin Creek	CWF, ATW, STS	3/1 – 6/15
	8.16	UNT to Blacksmith Run	Drains to CWF, TNR	
	8.70	Blacksmith Run	CWF, TNR, Drains to ATW, STS	10/1 – 4/1
	9.0	UNT to Blacksmith Run	Drains to CWF, ATW, TNR, STS	10/1 – 4/1
	9.1	UNT to Blacksmith Run	CWF, Drains to ATW, TNR, STS	10/1 – 4/1
	9.2	UNT to Blacksmith Run	Drains to CWF, TNR	10/1 – 4/1
	9.5	UNT to Blacksmith Run	Drains to CWF, TNR	10/1 – 4/1
	9.9	UNT to Blacksmith Run	Drains to CWF, TNR	10/1 – 4/1
	9.9	UNT to Blacksmith Run	Drains to CWF, TNR	10/1 – 4/1
	9.9	UNT to Blacksmith Run	CWF, Drains to TNR	10/1 – 4/1
	9.9	UNT to Blacksmith Run	Drains to CWF, TNR	10/1 – 4/1
	10.0	UNT to Blacksmith Run	Drains to CWF, TNR	10/1 – 4/1
	10.9	UNT to Cole Creek	Drains to CWF, WTW Burbot	10/1 – 4/15
	10.9	UNT to Cole Creek	Drains to CWF, WTW, Burbot,	10/1 – 4/15
	10.9	UNT to Cole Creek	Drains to CWF, WTW, Burbot,	10/1 – 4/15
	10.9	UNT to Cole Creek	CWF, WTW, Burbot	10/1 – 4/15
	10.9	UNT to South Branch Cole Creek	CWF, WTW, Burbot	10/1 – 4/15
	11.1	UNT to Cole Creek	Drains to CWF, Burbot, WTW	10/1 – 4/15
	11.3	UNT to Cole Creek	Drains to CWF, WTW	10/1 – 4/15
	11.3	UNT to Cole Creek	Drains to CWF, WTW	10/1 – 4/15
	11.3	UNT to Cole Creek	Drains to CWF, WTW	10/1 – 4/15
	11.4	UNT to Cole Creek	Drains to CWF, WTW	10/1 – 4/15
	12.8	UNT to Potato Creek	Drains to TSF, Blue spotted salamander	10/1 – 4/15
	12.8	Potato Creek	TSF, Blue spotted salamander, freshwater mussels	10/1 – 6/15
	14.0	Pierce Brook	CWF, Burbot	12/1 – 4/15
	14.9	Cloverlot Hollow	CWF, Burbot	12/1 – 4/15
	15.4	UNT to Kent Hollow	Burbot	12/1 – 4/15
	15.4	UNT to Kent Hollow	Burbot	12/1 – 4/15

TABLE B.4.a-1 (cont'd)

Fisheries of Special Concern

Facility/ State/ County	Milepost	Waterbody	Fishery Concern[a, b, c, d]	Timing Restriction [e]
	15.4	UNT to Kent Hollow	Burbot	12/1 – 4/15
	15.5	UNT to Kent Hollow	Burbot	12/1 – 4/15
	15.7	Kent Hollow	Burbot	12/1 – 4/15
	15.9	UNT to Kent Hollow	Burbot	12/1 – 4/15
	18.0	Allegheny River	CWF, Burbot, Blue spotted salamander, rare freshwater mussels	10/1 – 5/15
	23.8	UNT to Newell Creek	CWF	NA
	23.6	UNT to Barden Brook	CWF	NA
	24.1	UNT to Barden Brook	CWF	NA
	24.9	Barden Brook	CWF	NA
	25.8	UNT to McCrea Run	CWF	12/1 – 4/15
	26.4	McCrea Run	CWF	12/1 – 4/15
	26.9	UNT to McCrea Run	CWF	12/1 – 4/15
	27.6	Oswayo Creek	CWF, Burbot, rare freshwater mussels	10/1 – 6/15
New York				
Allegany				
	33.2	Dodge Creek	C(T)	10/1 – 5/31
	33.7	UNT to Wolf Creek	C(T)	10/1 – 5/31
	34.7	Wolf Creek	C(T)	10/1 – 5/31
Cattaraugus				
	39.0	Haskell Creek	C(T)	10/1 – 5/31
	61.9	Ischua Creek	C(T)	10/1 – 5/31
	65.9	McKinstry Creek	C(TS)	10/1 – 5/31

[a] Pennsylvania state-listed species.

[b] Pennsylvania Designated Water Uses and Water Quality Criteria (Pennsylvania Code § 93.9a-93.9z, 2013):

CWF = cold water fishes. Maintenance or propagation, or both, of fish species including the family Salmonidae and additional flora and fauna which are indigenous to a cold water habitat.

HQ-CWF = high quality waters-cold water fishes. High quality waters meet one or more criteria related to chemistry and biology as specified in Pennsylvania code.

TSF = trout stocking. Maintenance of stocked trout from February 15 to July 31 and maintenance and propagation of fish species and additional flora and fauna which are indigenous to a warm water habitat.

Drains to – stream has no designated classification in Pennsylvania.

[c] Pennsylvania Fish and Boat Commission Stream Designations (2014a, 2014b, 2015):

ATW = approved trout waters. Waters that contain significant portions that are open to public fishing and are stocked with trout.

STS = stocked trout streams.

WTW = wild trout waters. Stream sections that support natural reproduction of trout.

TNR = stream that supports natural reproduction of trout.

[d] New York Water Standards and Classifications (NYSDEC, 1991; NYSDEC, 2013a):

C(T) = Waters that are best suited for fishing and are classified as trout waters.

C(TS) = Waters that are best suited for fishing and are classified as trout spawning waters

[e] Refers to period of no in-stream work, as recommended by the PFBC (2016) or according to National Fuel's ESCAMP.

NA = not applicable.

Impacts and Mitigation

Impacts on fisheries would be short-term and limited to the pipeline construction period. Notably, impacts on fisheries are not anticipated from construction or operation of aboveground facilities. The level of impact would depend on the waterbody crossing construction method, duration of construction activities, precipitation events, sediment loads, stream area/velocity, and channel integrity and streambed material. Most fish would likely be displaced to similar adjacent habitats up or down stream for the duration of construction; however, stress, injury, or death of individual fish may occur.

In-stream construction and removal of vegetation may cause a temporary increase in turbidity levels, which can increase the sedimentation rate downstream of the work area. Temporary habitat alteration, alteration of streambed morphology, and substrate disturbance could also occur. Additionally, loss of stream bank and aquatic vegetation could affect aquatic species by reducing shade and cover and increasing water temperature. Potential fishery impacts from other construction activities could include introduction of water pollutants or entrainment of fish larvae.

The greatest potential impacts on fisheries would result from an increase in sediment loading and turbidity levels, which may cause degradation of benthic and fish spawning habitat and decreased dissolved oxygen levels within and downstream of the crossing location. This temporary increase in sediment loading would decrease rapidly following the completion of in-stream activities.

The highest levels of sediment would be generated by the wet open-cut crossing method. National Fuel would cross waterbodies using HDD method where warranted and feasible. Refer to table B.2.b-1 for a list of HDD crossings. With the exception of the risk of a release of drilling mud, the HDD method would minimize impacts on fisheries, fish habitat, and other aquatic resources in waterbodies crossed using this technique. To minimize adverse effects from an inadvertent release, National Fuel would implement the measures identified in its *Inadvertent Return Contingency Plan for Horizontal Directional Drilling*, including installing barriers to prevent materials from a release in uplands from entering a waterbody, installing a silt curtain downstream to contain release materials and minimize the waterbody area impacted by the release, and removing collected or contained drilling fluid from a waterbody by pump or vacuum track. We find these measures acceptable.

To minimize impacts on Fisheries of Special Concern, National Fuel would adhere to all time windows for in-stream construction recommended by the PFBC and in accordance with timelines included in the ESCAMP, which are consistent with FERC timing windows (see table B.4.a-1). To minimize impacts on all waterbodies crossed by the Project, National Fuel would implement mitigation measures outlined in its ESCAMP to minimize impacts on waterbodies during construction. These mitigation measures include, but are not limited to, maintaining reduced workspace areas near waterbodies, implementing buffers to prevent run-off from entering waterbodies, and installing erosion control devices. Additionally, in-stream construction would be completed within 24 hours, and water flow would be maintained to protect aquatic life and prevent downstream flow disruptions.

Potential for impacts on fisheries as a result of accidental spills would be avoided or minimized by implementing measures outlined in National Fuel's Spill Prevention, Control, and Countermeasure Plan. Once construction is complete, streambeds and banks would be restored to pre-construction conditions and contours to the maximum extent practicable, which would aid in preventing erosion and minimize long-term impacts on fisheries.

Hydrostatic testing could result in entrainment of fish larvae and temporarily reduced water flow causing stress to fish species. To reduce potential impacts of hydrostatic testing on fishery resources, National Fuel would implement measures contained in its ESCAMP for hydrostatic testing and comply with all applicable federal and state permits. Such measures include screening intake hoses to minimize potential entrainment of fish, maintaining adequate flow rates to protect aquatic life, and avoiding hydrostatic test water withdrawal from or discharge to waterbodies supporting threatened or endangered species. Additionally, National Fuel would regulate the hydrostatic test water discharge rate and install sediment barriers as necessary to prevent erosion, streambed scour, suspension of sediment, or excessive flow. We find these measures acceptable.

No long-term impacts are anticipated after construction due to restoration of stream bottoms and regrowth of stream bank vegetation. Based on the proposed construction methods, implementation of the proposed avoidance and minimization measures and project plans discussed above, and the limited duration of construction and potential fishery impacts, we conclude that the Project would have minimal and localized impacts on fisheries.

b. Wildlife

Existing Wildlife Resources

The Project would cross various upland and wetland habitat types that support a diversity of wildlife species, including forest, shrubland, open land, agricultural, developed areas, and wetland habitat. This section presents the common wildlife species potentially occurring in the project area (table B.4.b-1). A discussion of state- and federally listed threatened and endangered wildlife species is included in section B.4.d

<u>Forest Habitat</u>

Forest habitats comprise approximately 40 percent of the wildlife habitat in the project area and include larger tracts of northern hardwood forests with smaller coniferous components as well as managed forests. Tree and shrub layers provide nesting/breeding, shelter, and foraging habitat for various bird species and larger mammals. Organic material on the forest floor provides food and shelter for various invertebrates, reptiles, smaller mammals, and amphibians.

TABLE B.4.b-1

Common Wildlife Species Potentially Occurring in the Project Area

Vegetation Cover Type	Common Species
Forest	White-tailed deer (*Odocoileus virginianus*), American black bear (*Ursus americanus*), bobcat (*Lynx rufus*), porcupine (*Erethizon dorsatum*), fisher (*Martes pennant*), eastern chipmunk (*Tamias striatus*), white-footed mouse (*Peromyscus leucopus*), gray squirrel (*Sciurus carolinensis*), raccoon (*Procyon lotor*), gray fox (*Urocyon cinereoargenteus*), red fox (*Vulpes vulpes*), eastern coyote (*Canis latrans*), little brown bat (*Myotis lucifugus*), ruffed grouse (*Bonasa umbellus*), American woodcock (*Scolopax minor*), wild turkey (*Meleagris gallopavo*) black-capped chickadee (*Poecile atricapillus*), pileated woodpecker (*Dryocopus pileatus*) barred owl (*Strix varia*), eastern screech-owl (*Megascops asio*), wood turtle (*Clemmys insculpta*)
Shrubland	White-tailed deer, eastern chipmunk, woodchuck (*Marmota monax*), eastern cottontail (*Sylvilagus floridanus*), white-footed mouse, gray squirrel, raccoon, gray fox, red fox, striped skunk (*Mephitis mephitis*), coyote, wild turkey, ruffed grouse, American woodcock, black-capped chickadee, American robin, common yellowthroat (*Geothlypis trichas*)
Open land	White-tailed deer, woodchuck, eastern chipmunk, woodchuck, eastern cottontail, white-footed mouse, wild turkey, gray squirrel, raccoon, striped skunk, coyote, American robin (*Turdus migratorius*), song sparrow (*Melospiza melodia*), American kestrel (*Falco sparverius*), red-tailed hawk (*Buteo jamaicensis*), northern leopard frog (*Rana pipiens*)
Agricultural	White-tailed deer, woodchuck, raccoon, white-footed mouse, eastern cottontail, American crow (*Corvus brachyrhynchos*), house finch (*Haemorhous mexicanus*), barn swallow (*Hirundo rustica*), garter snake (*Thamnophis sirtalis*)
Developed areas	White-tailed deer, raccoon, eastern chipmunk, cottontail rabbit, grey squirrel, striped skunk, mouse, blue jay (*Cyanocitta cristata*), American robin, garter snake
Wetlands	Muskrat (*Ondatra zibethicus*), beaver (*Castor canadensis*), mink (*Neovison vison*), river otter (*Lontra canadensis*), mallard (*Anas platyrhynchos*) wood duck (*Aix sponsa*), common yellowthroat, red-winged blackbird (*Agelaius phoeniceus*), red-spotted newt (*Notophthalmus v. viridescens*), Eastern American toad (*Bufo a. americanus*), green frog (*Rana clamitans melanota*), painted turtle (*Chrysemys picta*), snapping turtle (*Chelydra s. serpentine*)

Shrubland Habitat

Shrublands consist of low woody vegetation and sapling-dominated uplands often in formerly forested areas where logging or clearing for utility rights-of-way have occurred and new trees are not yet mature. Within the project area, shrublands primarily occur within co-located portions of the pipeline, where forest was recently cleared for utility rights-of-way but has been allowed to regenerate. Scrub-shrub uplands provide a high density of stems of various heights, which provide cover for species of mammals and birds. In addition, these areas contain multiple wildlife food sources, including seeds from grasses/forbs and berries.

Open Land Habitat

Due to the Project being largely co-located with existing rights-of-way, nearly 25 percent of the project area includes open lands. As described in section B.3.a, open lands are characterized by herbaceous vegetation, which is primarily composed of meadow or existing right-of-way. Open lands within the project area provide habitat for species that require dense cover and forage on grass and forb seeds, including grassland birds, hawks, rabbits, and meadow voles, as well as pollinators (e.g., bees and butterflies).

Agricultural Habitat

Agriculture in the project area consists of cultivated row crops, hayfields, pastures, orchards, and vineyards. Agricultural habitat is considered of minor to moderate importance to wildlife (relative to other habitats) due to the lack of food source diversity, although some species will utilize agricultural areas for foraging, such as white-tailed deer, raccoons, and wild turkey and other bird species.

Developed Areas

Developed areas consist of residential and industrial/commercial land. This developed land generally provides low habitat value in the project area, but may provide habitat for common wildlife species adapted to human disturbance (e.g., raccoon, squirrels, chipmunks, house finch, American robin, and garter snake).

Wetlands

Wetlands within the project area include palustrine emergent, palustrine scrub-shrub, and palustrine forested wetlands. Wetlands support a diverse ecosystem that provides nutrients, vegetated cover, shelter, and water for a large variety of terrestrial and aquatic wildlife species. For more detailed descriptions of characteristics of each wetland type see section B.2.c.

Protected and Sensitive Areas

As discussed above, two inland poor fen communities and one silver maple-ash swamp were identified during preliminary agency coordination as potentially being within 0.5 mile of the project area (NYSDEC, 2014a). National Fuel modified the pipeline alignment to avoid these sensitive habitats; as a result, the closest of these communities (an inland poor fen community) would be approximately 1,700 feet east of the Project. Therefore, protected and sensitive natural areas and associated wildlife would not be affected by construction or operation of the Project.

Impacts and Mitigation

Construction of the Project would affect a total of 1,206.1 acres of wildlife habitat (see table B.3.a-1). During construction, mobile species would be temporarily displaced from the construction right-of-way and surrounding areas to similar habitats nearby. Some wildlife displaced from the right-of-way would return to the newly disturbed area and adjacent, undisturbed habitats after completion of construction. Less mobile species, such as small mammals, reptiles, and amphibians, may experience direct mortality or permanent displacement. Displacement of species could lead to increased competition for some resources.

Vegetation clearing within the project area would reduce cover, foraging, breeding, and nesting habitat for some wildlife. The degree of effects would depend on the type of habitat affected, the timing of clearing and construction activities, and the rate at which the habitat returns to preconstruction conditions. The effect on species that utilize open land, agricultural, and developed habitats would be short term, because these areas would be reseeded after construction and likely recover within 1 to 3 years. Impacts on wildlife due to displacement

from shrubland and forested habitats would be long term; reestablishment of shrubland habitats would require 5 to 7 years, and forested habitats could take from 10 to over 30 years to return to preconstruction conditions. National Fuel has minimized the potential for these long-term effects by co-locating and overlapping the proposed ATWS areas with existing rights-of-way to reduce the amount of forest clearing required for the Project.

National Fuel would implement several measures to minimize or avoid direct impacts on wildlife during construction, including the FERC's Plan and Procedures and National Fuel's ESCAMP and Project-specific plans. Contractors would be required to construct earthen ramps in open trenches to facilitate the escape of any wildlife that may become trapped in open trenches. Additionally, National Fuel would ensure all contractors and workers participate in environmental training that outlines the appropriate steps to take should wildlife be encountered during construction or identified in trenches prior to commencement of construction each day.

Operation of the Project would impact a total of 604.9 acres of vegetation, much of which is wildlife habitat. With the exception of a 10-foot-wide corridor centered over the pipeline that may be mowed annually in upland areas, vegetation maintenance within the permanent right-of-way would take place no more frequently than once every 3 years. In wetlands, a 10-foot-wide corridor centered over the pipeline would be maintained; trees within 15 feet of the pipeline with roots that could compromise the integrity of the pipeline coating would be selectively cut and removed. In addition, maintenance clearing would not be conducted between April 15 and August 1, so as to avoid direct and indirect effects on migratory birds during the nesting and breeding season.

Operation of the Project would have the greatest impact on wildlife occurring within forested habitat. Approximately 338.7 acres of forest would be permanently converted to open habitat within the permanent easement, which may result in the permanent displacement of certain forest-dwelling species. However, because approximately 69 percent of the pipeline would be co-located with existing rights-of-way, it is likely that the majority of the species within the affected forested habitats are acclimated to inhabiting forest edge habitat, and impacts would be minor.

Operation of aboveground facilities would permanently convert 8.0 acres of agricultural habitat, 1.6 acres of forest, and 4.5 acres of open land habitat to industrial use, thereby eliminating most wildlife habitat within the footprint of the facilities. Furthermore, operation could interrupt or alter wildlife behavior and cause decreased breeding success due to increased noise levels, light pollution, and air pollution.

The FWS and the public submitted comments indicating concern that increased noise levels and vibrations in the vicinity of aboveground facilities could disrupt wildlife behavior and may permanently displace some species of wildlife. National Fuel completed noise assessments for each aboveground facility site. The results of the assessments indicate that the proposed aboveground facilities would cause minor or negligible permanent increases in noise levels within the immediate vicinity (Hellebuyck, 2015a, 2015b, 2015c). We have reviewed the results of these studies, which are discussed in detail in section B.8, and conclude that operation of the aboveground facilities would result in minimal increases in noise levels beyond the facility fenceline. Furthermore, National Fuel would implement several measures to minimize

permanent noise impacts during operation of the aboveground facilities. Such measures include burying station piping where feasible, installing noise-reducing building insulation and equipment silencers, retaining vegetation around facilities, and constructing earthen berms and evergreen plantings around perimeters of some facilities.

In a letter dated September 21, 2015, the NYSDEC commented that chorus frogs may inhabit wetlands near the originally proposed Pendleton Compressor Station site on Aiken Road, and recommended avoidance of wetlands and further investigation into chorus frog presence. Permanent wetland impacts in the area could result in loss of habitat for chorus frogs. National Fuel has since relocated the site for the Pendleton Compressor Station to Killian Road. The NYSDEC indicated during informal discussion with National Fuel that the Killian Road location does not contain suitable habitat for chorus frogs, and that a chorus frog survey was no longer warranted. Therefore, we conclude that construction and operation of the Pendleton Compressor Station is not expected to impact chorus frogs or their wetland habitat.

Commenters also expressed concern for the Project's potential effects on pollinating insects. Pollinating insects primarily utilize open lands within the project area (e.g., grassland, meadow) that support flowering vegetation. Maintenance of the permanent right-of-way would use mechanical methods only; chemicals such as herbicides would not be used to maintain vegetation. Open lands affected by the Project would be re-seeded after construction with seed mixes containing a diverse number of native plant species appropriate for the habitat type. As described in section B.3.a., operation of aboveground facilities would impact primarily agricultural lands, particularly croplands. Although pollinating insects play an important role in agriculture, most row crops do not naturally support pollinating insects because the plants flower simultaneously for only a brief portion of the growing season. Construction activities could hinder crop pollination efforts if they were to occur when crops are flowering; however, this impact would be minor, short-term, and limited to the immediate vicinity of construction activity. Following construction, the right-of-way would be seeded with a mix including species commonly used by pollinating insects. Because most impacts on habitat for pollinators would be short term and limited to construction, and chemical treatments would not be used to maintain the permanent right-of-way, we do not anticipate any measurable impacts on pollinating insects from the Project.

Although individuals of some wildlife species would be affected by the Project, most of the impacts on wildlife would be short-term and limited predominantly to the construction period. The pipeline would be co-located with existing right-of-way for about 68.3 miles (69 percent) and much of EMP-03 would be in agricultural lands and would not permanently alter the character of the majority of available habitats or the overall landscape. Areas adjacent to the project site provide similar and ample habitats for wildlife that would be temporarily or permanently displaced during construction or operation of the project facilities. Based on implementation of proposed avoidance and minimization measures and because the majority of the disturbed areas would be restored and allowed to revert to previous conditions following construction, we conclude that construction and operation of the Project would not have a measureable impact on local wildlife populations or habitat.

c. Migratory Birds

Migratory birds are species that nest in the United States and Canada during the summer and then migrate to and from the tropical regions of Mexico, Central and South America, and the Caribbean for the non-breeding season. Most migratory birds are protected under the Migratory Bird Treaty Act (16 U.S. Code 703-711). Bald and Golden Eagles are additionally protected under the Bald and Golden Eagle Protection Act (16 U.S. Code 668-668d). The Migratory Bird Treaty Act, as amended, prohibits the taking, killing, possession, transportation, and importation of migratory birds, their eggs, parts, and nests. Executive Order 13186 (66 Federal Register 3853) was enacted in 2001 to, among other things, ensure that environmental analyses of federal actions evaluate the impacts of actions on migratory birds. Executive Order 13186 directs federal agencies to identify where unintentional take is likely to have a measurable negative effect on migratory bird populations and avoid or minimize adverse impacts on migratory birds through enhanced collaboration with the FWS. The environmental analysis should further emphasize species of concern, priority habitats, key risk factors, and that particular focus should be given to population-level impacts.

On March 30, 2011, the FWS and the Commission entered into a Memorandum of Understanding regarding implementation of Executive Order 13186, "Responsibilities of Federal Agencies to Protect Migratory Birds" that focuses on avoiding or minimizing adverse impacts on migratory birds and strengthening migratory bird conservation through enhanced collaboration between the two agencies. This voluntary Memorandum of Understanding does not waive legal requirements under the Migratory Bird Treaty Act, Bald and Golden Eagle Protection Act, Endangered Species Act (ESA), Federal Power Act, NGA, or any other statutes and does not authorize the take of migratory birds.

In order to accurately identify bird species with the greatest conservation priority and stimulate action by federal/state agencies and private parties, the FWS Migratory Bird Office issued a report describing the Birds of Conservation Concern (BCC) (FWS, 2008). The FWS describes the BCC as a subset of birds protected under the Migratory Bird Treaty Act that are likely to become candidates for listing under the ESA without additional conservation actions (FWS, 2008). Of the approximately 144 species of migratory birds that could occur within the project area, 21 are BCC species (see table B.4.c-1; FWS 2008, 2011).

As described previously, a total of 1,206.1 acres of habitat would be impacted by construction of the Project. Of this, 604.9 acres would be impacted by operation of the Project, either through permanent conversion to industrial use, conversion from upland forest or forested wetland habitat to open land, or periodic maintenance of habitat within the permanent right-of-way.

Potential impacts of the Project on migratory birds, including BCC species, would typically be similar to impacts on general wildlife resources (see *Impacts and Mitigation*, above). Potential impacts specific to migratory birds discussed in additional detail below include displacement, forest fragmentation, and increased noise.

TABLE B.4.c-1

Land Birds of Conservation Concern in the Southeastern Coastal Plain Region

Common Name	Scientific Name	Common Name	Scientific Name
American bittern	*Botarus lentiginosus*	Least bittern	*Ixobrychus exilis*
Bald eagle	*Haliaeetus leucocephalus*	Louisiana waterthrush	*Seiurus motacilla*
Black tern	*Chlidonias niger*	Pied-billed grebe	*Podilymbus podiceps*
Black-billed cuckoo	*Coccyzus erythropthalmus*	Prairie warbler	*Dendroica discolor*
Black-crowned night heron	*Nycticorax nycticorax*	Prothonotary warbler	*Protonotaria citrea*
Blue-winged warbler	*Vermivora cyanoptera*	Red-headed woodpecker	*Melanerpes erythrocephalus*
Canada warbler	*Cardellina canadensis*	Short-eared owl	*Asio flammeus*
Cerulean warbler	*Setophaga cerulean*	Upland sandpiper	*Bartramia longicauda*
Common tern	*Sterna hirundo*	Wood thrush	*Hylocichla mustelina*
Golden-winged warbler	*Vermivora chrysoptera*	Worm-eating warbler	*Helmitheros vermivorum*
Henslow's sparrow	*Ammodramus henslowii*		

Source: FWS, 2008

Displacement from and avoidance of the project area could impact bird migration, nesting, foraging, and mating behaviors. As a result, birds may experience increased stress, competition for nearby suitable habitat, and decreased fitness. The greatest impacts would occur if construction activities, particularly vegetation clearing and grading, take place during the primary nesting season. This could result in the destruction of nests and mortality of eggs and young. To minimize impacts on migratory birds, National Fuel would implement its project-specific *Migratory Bird Habitat Conservation Plan*, which includes conservation measures to avoid and minimize impacts on migratory birds. The plan states that clearing would typically occur after September 1 and before March 31, which would comply with clearing timeframes recommended by the FWS and PGC and avoid direct impacts on active nests. The primary goal of clearing during the non-breeding season is to remove suitable nesting habitat when birds are not present (or not engaging in breeding behavior). Thus when actual construction takes place, which often overlaps the breeding season, there are no birds nesting in the immediate area due to the lack of habitat. It is possible that some nesting birds may be disturbed during construction, if actively nesting adjacent to the right-of-way and near construction activities and equipment.

Following construction, National Fuel would adhere to its ESCAMP for routine vegetation maintenance along the permanent right-of-way, thereby avoiding vegetation clearing during the nesting and breeding season for migratory birds. National Fuel also indicated in the plan that it developed contingency plans for vegetation clearing. Unforeseen circumstances such as required agency permit delays, land rights, weather conditions, or worker safety could result in some vegetation clearing occurring within the specified time period above. Should these circumstances arise, National Fuel would implement one of the following three alternatives, with the first alternative being the most preferred option and the last alternative being the least preferred option:

a. National Fuel would avoid clearing during the nesting and breeding season for the majority of migratory birds that could occur in the project area by avoiding clearing between April 1 and July 14;

b. National Fuel would avoid clearing during the nesting and breeding season in habitats most likely to contain active nests of BCC species by avoiding clearing in forested, open/high grassland, shrub, and marsh habitats between April 1 and July 14; or

c. National Fuel would consult with the FWS on a site-specific basis to determine the best conservation measures in the event that clearing in forested, open/high grassland, shrub, and marsh habitats between April 1 and July 14 is unavoidable.

The FWS reviewed National Fuel's *Migratory Bird Habitat Conservation Plan* and indicated general support for the proposed conservation measures (FWS, 2015b). One additional recommendation the FWS had was to use plant species that would provide functional habitat for wildlife species during restoration. The PGC made a similar comment and provided a recommended seed mix for replanting disturbed areas that would benefit migratory birds and other wildlife (including pollinators). National Fuel would adhere to these recommendations by using NRCS and PGC-suggested mixes, or similar seed mixes which are comprised of native plant species that are comparable to what currently exists within the project area.

The FWS, PGC, and several commenters expressed concern relating to long term effects of forest fragmentation on migratory birds. The proposed pipeline route would impact approximately 33.3 acres of forest interior habitat (i.e., forest greater than 300 feet from an existing edge) in Pennsylvania. Tree clearing in these areas would create new openings, which could result in long-term and permanent loss of habitat for migratory bird species that require large areas of contiguous forested habitat. Approximately 68 percent of the project route would be co-located with existing utility rights-of-way; as a result, much of the habitat that would be impacted is previously disturbed, within or adjacent to existing facilities, and/or composed of agricultural land, all of which minimize impacts on migratory birds. The pipeline facilities generally avoid non-fragmented forest, thereby minimizing the effects of forest fragmentation and forest edge effect caused by construction.

The FWS and several commenters had concerns about noise impacts on migratory birds due to the operation of aboveground facilities. Noise increases above ambient levels at the aboveground facility locations could cause temporary and permanent disturbances to migratory birds in the immediate area. The greatest potential noise impacts could occur at the proposed Wheatfield Dehydration Facility due to its proximity to the Niagara River Corridor Important Bird Area (IBA). Data from a noise monitoring station near the IBA indicate that operation of the facility would not increase ambient noise levels within the IBA (Hellebuyck, 2015b). Additionally, National Fuel would design aboveground facilities and select equipment to minimize potential noise disturbances to migratory birds. No other IBAs are within the vicinity of the Project. Therefore, we anticipate impacts on migratory birds from noise level increases would not be significant.

Comments from the public and the NYSDEC indicated a concern for impacts on birds of prey from the proposed Pendleton Compressor Station Site. The NYSDEC indicated the site is adjacent to potential breeding habitat for the northern harrier and short-eared owl which are listed species in New York; further discussion on potential impacts on these species is provided in section B.4.d. Birds of prey are highly mobile, and would likely be displaced into similar

suitable habitat in the immediate area surrounding the site for the duration of construction. Nonetheless, birds nesting nearby could still be affected by construction noise and activity.

Operation of the Pendleton Compressor Station could cause increased noise and lighting that could disrupt activities such as breeding and hunting. However, due to current human activities in the surrounding area, birds of prey and other wildlife in the area are likely acclimated to minimal noise disturbances and increased artificial lighting such as those expected from the project's aboveground facilities. Therefore, we anticipate that impacts on birds of prey from construction and operation of the Pendleton Compressor Station would be minor.

In summary, National Fuel has maximized the use of existing utility rights-of-way; would implement timing restrictions on vegetation clearing to minimize disturbance during nesting season; and would primarily construct the Project along existing forest edge, open land, and agricultural habitats. Additionally, National Fuel would provide mitigation for impacted forested wetlands in accordance with USACE requirements, resulting in no net loss of this habitat type. Therefore, we conclude that impacts on migratory birds would be minimal and effects on their habitat would be minimized to the extent practicable.

While there could be some temporary, short-term impacts on wildlife species during construction of project facilities, habitats would exist similarly to present condition after construction. National Fuel would adhere to all requirements outlined in its ESCAMP. Therefore, we conclude that construction and operation of the Project would not be expected to adversely affect the distribution or regional abundance of wildlife species given the similar habitat types available in the immediate vicinity.

d. Threatened, Endangered, and Special Status Species

Federally Listed Species

Federal agencies are required under Section 7 of the ESA, as amended, to ensure that any actions authorized, funded, or carried out by the agency would not jeopardize the continued existence of a federally listed threatened or endangered species, or result in the destruction or adverse modification of the designated critical habitat of a federally listed species. As the lead federal agency authorizing the Project, the FERC is required to consult with the FWS to determine whether federally listed threatened or endangered species or designated critical habitat are found in the vicinity of the Project, and to determine the proposed action's potential effects on those species or critical habitats.

As required by Section 7 of the ESA, we are requesting that the FWS accept the information provided in this EA as the Biological Assessment for the Project. The Project would have no effect on listed marine or anadromous species under the jurisdiction of the National Marine Fisheries Service; therefore, Section 7 consultation between the FERC and National Marine Fisheries Service is not warranted.

Based on information obtained from the FWS, four federally listed threatened or endangered species occur or potentially occur within the counties impacted by the Project. None of these species have critical habitat designated within counties impacted by the Project. These species and their known areas of occurrence are summarized in table B.4.d-1 and discussed in the text below.

Northern Long-eared Bat

The northern long-eared bat is listed as a federally threatened species under Section 4(d) of the ESA, effective February 16, 2016. Northern long-eared bats are widely distributed in the eastern United States, where they occur in a variety of habitats, depending on season, gender, and reproductive status. Although previously common in the Northeast, including Pennsylvania and New York, the number of northern long-eared bats (from hibernacula counts) has declined by up to 99 percent due to the spread of white-nose syndrome (FWS, 2015c). The northern long-eared bat spends the winter hibernating in caves and underground mines. Two of the counties (Cattaraugus and Erie) crossed by the Project have hibernacula known to be infected with white-nose syndrome. During the summer, the bat uses almost any forested habitat including adjacent open areas for foraging, and spends the day roosting in natural cavities and hollow trees (Pennsylvania Natural Heritage Program, 2008). Summer roost habitat, including maternity roosts, includes tree cavities and exfoliating bark/snags in mature deciduous/mixed forests and also human structures (PGC and PFBC, 2005). Northern long-eared bats forage at night for flying insects over a wide variety of habitats including small ponds, in forest clearings, at treetop level, and along forest edges.

TABLE B.4.d-1

Federally Listed Threatened and Endangered Species

Common Name	Scientific Name	Federal Status	Potential Location
Mammals			
Northern long-eared bat	*Myotis septentrionalis*	Threatened	AL, CA, ER, MC, NI
Aquatic Invertebrates			
Clubshell	*Pleurobema calva*	Endangered	CA
Rabbitsfoot	*Quadrula cylindrica cylindrica*	Threatened	MC
Rayed bean	*Villosa fabilis*	Endangered	AL, CA

AL Allegany County, New York
CA Cattaraugus County, New York
ER Erie County, New York
MC McKean County, Pennsylvania
NI Niagara County, New York

Potential foraging habitat for the northern long-eared bat is present throughout the project area; however, roosting habitat is limited to forested areas. According to the NYSDEC/New York Natural Heritage Program (NYNHP) and FWS New York Field Office, the only known winter habitat for the northern long-eared bat in the counties crossed by the Project is approximately 15 miles north-northeast from the pipeline facilities in Erie County, New York. No new hibernacula were identified along the Project.

As this species was only recently listed, survey data are not available for the project area to determine the extent of potential roosting activities, especially relating to maternity roosts. As such, the FWS' Pennsylvania Area and New York Field Offices requested that National Fuel perform surveys for the northern long-eared bat. National Fuel performed mist-net surveys in Pennsylvania and acoustic monitoring surveys in New York using the FWS' *2015 Rangewide*

Indiana Bat Summer Survey Guidelines, which the FWS also recommends for conducting northern long-eared bat presence/probable absence surveys (FWS, 2015d). In Pennsylvania, northern long-eared bats were captured at 14 mist-net sites, and 36 roost trees were identified in the survey area; however, only one roost tree was identified within the proposed project workspace, and that tree was used by a non-reproductive, juvenile female. The results of the acoustic surveys identified one site that was positive for the northern long-eared bat in Cattaraugus County, New York.

Potential direct impacts on the northern long-eared bat due to construction and operation of the Project include changes to occupied foraging habitat, removal of or changes in potential roost trees in occupied habitat, injury or harm to individual bats, and/or disturbance near roosting bats. Potential indirect impacts could result from a reduction in potential roost trees, alterations to foraging areas or migration corridors, and forest fragmentation in roost areas.

Loss of roost trees due to clearing could result in a loss of potential bat summer habitat. Roost trees are by nature ephemeral, changing from season to season in condition. As historically used roost trees are lost due to human disturbance or natural events (e.g., wind damage), bats often must locate alternate roost trees. Given that locating alternate roost trees is a typical process for northern long-eared bats, and they are habitat generalists, roost tree availability for maternal colonies is not likely to be a limiting factor for occupation within an otherwise forested area, even if some trees are cleared and a primary roost tree is lost.

Project-related construction and operation activities could directly expose roosting bats to noise and vibrations caused by tree clearing activities, pipeline construction equipment, and aboveground facility noise. The response of northern long-eared bats exposed to these disturbances while roosting could range from no perceivable response to avoidance of the area.

Hibernating bats could be woken from hibernation which would result in death of those disturbed individuals. The nearest hibernaculum is at least 15 miles from the Project; therefore, we conclude that noise and vibrations caused by construction and operation of the Project would not cause a measureable effect on hibernating northern long-eared bats.

The immediate surroundings adjacent to the positive acoustic site in Cattaraugus County contain a prevalence of fragmented forest and agricultural areas that would provide comparable roosting and foraging habitat to what presently exists within the project area at the site. The positive mist-net sites and project-identified roost trees in McKean County are surrounded by relatively contiguous forest that could provide an abundance of suitable roost trees. Since northern long-eared bats are known to forage in various habitats and ample foraging habitat exists immediately surrounding the Project's bat-positive sites, we have determined that the Project would not significantly reduce foraging habitat for the northern long-eared bat.

To minimize potential adverse impacts on northern long-eared bats that may be roosting in forested areas of the Project, National Fuel would implement several conservation measures that follow the FWS' provisions for incidental take outlined in the final 4(d) rule for the species (FWS, 2016). These measures include avoiding clearing during the pup season (June 1 – July 31) within a 0.25-mile radius of the 36 known/Project-identified roost trees in Pennsylvania, the 14 mist-net locations in Pennsylvania where northern long-eared bats were captured, and the

site where acoustic surveys positively identified the species in New York. For the remaining project areas where northern long-eared bat presence was not detected by survey efforts, National Fuel would avoid tree clearing between June 1 and July 15th. Additionally, National Fuel has co-located the majority of the project route with existing rights-of-way, thereby minimizing roosting habitat loss by expanding existing forest openings.

Based on northern long-eared bat characteristics, habitat requirements, available survey results, National Fuel's adherence to FWS recommendations for habitat clearing during the pup season, and minimization of roosting habitat loss by co-locating the majority of the project route, we conclude that construction and operation of the Project *may affect, but is not likely to adversely affect* the northern long-eared bat.

Rabbitsfoot

The rabbitsfoot is a medium- to large-sized freshwater mussel, typically less than 7 inches in length. Rabbitsfoot mussels prefer shallow streams and edges of rivers with sand or gravel bottoms. Currently, 11 viable populations remain (FWS, 2015f), one of which occurs within the Allegheny River. However, it is unknown if the rabbitsfoot mussel is present in the vicinity of the Project's proposed crossing of this waterbody. Potential impacts on the rabbitsfoot from in-stream construction include habitat degradation and injury or death of individuals present within the river crossing area. Trenchless construction techniques such as the HDD method could impact the rabbitsfoot if an inadvertent release of drilling fluid were to occur. Such impacts would include an increase in sediment and turbidity, which could decrease water quality and cause harm to individuals. Impacts from water withdrawal for hydrostatic testing and HDD drilling mud would be minimized by measures outlined in National Fuel's ESCAMP, such as screening intake hoses to minimize entrainment and maintaining adequate flow rates to protect aquatic life.

National Fuel would cross the Allegheny River using the HDD method, which would avoid impacts on water quality and aquatic life unless an inadvertent release of drilling mud were to occur directly or indirectly into the waterbody. To minimize adverse effects from an inadvertent release, National Fuel would implement its *Inadvertent Return Contingency Plan for Horizontal Directional Drilling*. Measures to be implemented that would minimize potential impacts on the rabbitsfoot include:

- pre-construction mussel surveys would be conducted within the Allegheny River no earlier than 2 weeks before the HDD crossing commences in order to locate and identify any mussels;
- the locations of protected mussel species would be marked with stakes or buoys, if identified;
- marked locations would be monitored during an inadvertent release to determine if further protective action is warranted;

- a mussel specialist would be retained for the duration of the HDD installation, who would work with appropriate agencies as necessary to determine the best conservation actions in the event of an inadvertent release; and

- suitable habitats would be identified upstream and/or downstream of protected mussel populations during pre-construction surveys; mussels would be relocated to those areas in the event of an emergency situation if necessary and as directed by the FWS.

Based on National Fuel's proposed method for installing the pipeline beneath the Allegheny River, and the measures proposed to avoid or minimize impacts on rabbitsfoot mussels in the event of an inadvertent release, we have determined that the Project *may affect, but is not likely to adversely affect* the rabbitsfoot. In a letter dated June 16, 2016, the FWS Pennsylvania Field Office (FWS, 2016) concurred with this determination.

Clubshell and Rayed Bean

The clubshell mussel typically inhabits clean, loose sand and gravel in medium to small rivers and streams. This mussel will bury itself in the bottom substrate to depths of up to 4 inches (FWS, 1997).

The rayed bean is a small freshwater mussel, usually less than 1.5 inches in length. Generally, it is found in smaller, headwater creeks, but is sometimes found in large rivers and wave-washed areas of glacial lakes. The rayed bean typically inhabits gravel or sand substrates, and is often found in and around roots of aquatic vegetation. Adults spend their entire lives partially or completely buried in substrate (FWS, 2012).

The FWS indicated that the clubshell and rayed bean mussels are known to occur within Ischua Creek and Oil Creek in Cattaraugus County, New York, but could also be present in other waterbodies crossed by the Project with suitable habitat (Sullivan, 2014). Because these mussel species are also state-listed as endangered in New York, the NYSDEC recommended that National Fuel conduct surveys for the clubshell and rayed bean at six proposed waterbody crossing locations (Dodge Creek, MP 33.3; Wolf Creek, MP 34.1; Haskell Creek, MP 39.5; Oil Creek, MP 42.7; Ischua Creek, MP 43.3; and Ischua Creek, MP 62.3). Of the streams surveyed, the rayed bean was identified in Oil Creek; the clubshell was not identified in any surveyed stream crossings. National Fuel has not yet completed surveys on Dodge Creek (MP 33.3) or Ischua Creek (MP 62.3).

Potential impacts on the clubshell and rayed bean from in-stream construction include habitat degradation and injury or death of individuals present within the creek crossing area. Trenchless construction techniques such as the HDD method could impact the clubshell and rayed bean if an inadvertent release of drilling fluid were to occur. Such impacts would include an increase in sediment and turbidity, which could decrease water quality and cause harm to individuals. Impacts from water withdrawal for hydrostatic testing and HDD drilling mud would be minimized by measures outlined in National Fuel's ESCAMP, such as screening intake hoses to minimize entrainment and maintaining adequate flow rates to protect aquatic life.

National Fuel would complete both crossings of Ischua Creek using the HDD method and Oil Creek using the bore method, thereby avoiding direct impacts on the bed and banks of the waterbodies. National Fuel's *Inadvertent Return Contingency Plan for Horizontal Directional Drilling*, including the protective measures discussed above for the rabbitsfoot, would also be implemented for the Ischua Creek and Oil Creek crossings. If the bore method is not feasible for crossing of Oil Creek, National Fuel would use a dry crossing method, meaning that either a flume or dam and pump would be used. Should Oil Creek require a dry crossing method, National Fuel would relocate all federally protected mussels to suitable habitats outside of the workspace. Additionally, a mussel expert would confirm all mussels have been moved from the workspace prior to any in-stream trenching. With implementation of National Fuel's proposed measures, we have determined that the Project *may affect, is not likely to adversely affect* the clubshell and rayed bean.

Conclusion

As discussed above, we have determined that the Project is not likely to adversely affect any of the four federally listed species with the potential to occur in the project area. Although potentially suitable habitat is present within the project area, due to the locations of known occurrences, survey results, National Fuel's proposed waterbody crossing methods, and proposed conservation and mitigation measures, we have determined that the potential for the Project to adversely affect federally listed species is low.

In compliance with Section 7 of the ESA, we are requesting concurrence from the FWS for the project-related impacts on federally listed species. Because this consultation has not yet been completed and National Fuel has not completed surveys for federally listed freshwater mussels, **we recommend that:**

- **National Fuel should not begin construction activities until:**
  - **a. freshwater mussel surveys are complete for Dodge Creek and Ischua Creek for the clubshell and the rayed bean;**
  - **b. National Fuel submits full survey reports to the FWS' New York Field Office, the PFBC, and the Secretary;**
  - **c. the FERC staff completes ESA 7 consultation with the FWS; and**
  - **d. National Fuel has received written notification from the Director of OEP that construction or use of mitigation may begin.**

State-Listed Species

Pennsylvania Code, Chapter 75 (§ 75.1-4), New York Environmental Conservation Law § 11-0535, and 6 New York Code of Rules and Regulations Part 182 identify and establish protection for state-listed endangered and threatened species. A total of 14 state-listed species and 1 species of special concern were identified as potentially occurring within the project area. Of these, four species are also federally listed and are discussed in section B.4.a. The state-listed species and their known areas of occurrence are summarized in table B.4.d-2. The Project is expected to have no impact on 4 of the 15 state-listed or special concern species due to the absence of suitable habitat within the project area. The species are discussed below.

TABLE B.4.d-2

State-Listed Threatened, Endangered, and Special Concern Species Potentially Occurring in the Project Area

Common Name	Scientific Name	Federal Status [a]	Pennsylvania Status [a]	New York Status [a]	County, State [b]
Mammals					
Northern long-eared bat	*Myotis septentrionalis*	T	SC	NL	MC, CA, ER
Birds					
Bald eagle	*Haliaeetus leucocephalus*	DL [c]	NL	T	MC
Northern harrier	*Circus cyaneus*	NL	NL	T	NI
Short-eared owl	*Asio flammeus*	NL	NL	E	NI
Reptiles and Amphibians					
Blue-spotted salamander	*Ambystoma laterale*	NL	E	NL	MC
Eastern hellbender	*Cryptobranchus alleganiensis*	NL	NL	SC	MC, AL, CA
Fish					
Burbot	*Lota lota*	NL	E	NL	MC
Aquatic Invertebrates					
Clubshell	*Pleurobema clava*	E	E	E	CA
Rabbitsfoot	*Quadrula cylindrica cylindrica*	T	E	NL	MC
Rayed bean	*Villosa fabalis*	E	E	E	CA
Wavy-rayed lampmussel	*Lampsilis ovata*	NL	NL	T	MC
Plants					
Creeping sedge	*Carex chordorrhiza*	NL	NL	T	CA
False-hop sedge	*Carex lupuliformis*	NL	NL	T	ER
Schweinitz's sedge	*Carex schweinitzii*	NL	NL	T	CA
Stalked bulrush	*Scirpus pedicellatus*	NL	T	NL	MC

[a] E = Endangered, T = Threatened, SC = Special Concern, DL = Delisted, NL = Not Listed

[b] Counties include McKean (MC) County, Pennsylvania and Allegany (AL), Cattaraugus (CA), Erie (ER), and Niagara (NI) Counties, New York.

[c] Although the bald eagle is delisted, it is still federally protected under the Bald and Golden Eagle Protection Act and the Migratory Bird Treaty Act.

Pennsylvania

Blue-spotted Salamander

The blue-spotted salamander is a medium sized salamander species typically associated with floodplain forests with dense canopy. Woodland vernal pools that stay inundated for long periods of time are very important to this species due to the temperature requirements of eggs and youth. Young transform in late summer and are sexually mature in their third year. The primary diet is both aquatic and upland mollusks and insects (Donato, 2000). The PFBC indicated the Project would cross suitable habitat near the Allegheny River and Potato Creek and requested that National Fuel perform surveys for the blue-spotted salamander and its habitat at those locations. National Fuel has since rerouted the Allegheny River crossing, and in a letter dated January 4, 2016, the PFBC confirmed the new location would avoid direct impacts on blue-spotted salamander habitat. National Fuel conducted surveys at the proposed Potato Creek crossing in 2014, which identified blue-spotted salamanders occupying habitat within the project area (MP 12.8). Despite route revisions near the Potato Creek crossing, potential direct impacts

on adjacent forested habitat used by blue-spotted salamanders would not be avoided. Potential impacts on the species include long-term or permanent loss of habitat, loss of eggs/young, and injury or death of individuals.

In a letter dated January 4, 2016, the PFBC indicated that it would require National Fuel to avoid direct impacts on all critical breeding pools in the project area. In addition, the PFBC recommended the following measures for minimizing impacts on blue-spotted salamanders at the Potato Creek crossing:

- no work should occur within 1,000 feet of blue-spotted salamander habitat from March 1 to May 15, in order to avoid impacts on blue-spotted salamanders during the spring migration period;
- cutting and removal of trees within 1,000 feet of blue-spotted salamander habitat should occur during the species' winter hibernation period;
- a designated individual should monitor the project workspace for salamanders and relocate them outside of the workspace as necessary; and
- drift fence should be installed along the right-of-way prior to beginning work, in order to deter salamanders from crossing into the workspace.

National Fuel has agreed to all the conservation measures prescribed by the PFBC. Therefore, impacts on the blue-spotted salamander would be sufficiently minimized.

Burbot

Burbot, a benthic, coldwater fish, typically inhabit deep, cold waters of lakes and rivers. During late winter and early spring they often migrate from lakes to tributary rivers. Young burbot can be found along rocky lake shores in weedy areas, or hiding between rocks in tributary streams. In Pennsylvania, the only known populations occur in Lake Erie and the Allegheny River headwaters (Pennsylvania Natural Heritage Program, 2007a). In accordance with a request from the PFBC, National Fuel conducted presence/absence surveys for burbot in the vicinity of the Project in Potato Creek. No burbot were identified during surveys; however, two waterbodies crossed by the Project are confirmed by PFBC records to support burbot: the Allegheny River and Oswayo Creek. Surveys for burbot were not performed at these locations because the species was assumed to be present. Potential impacts on burbot would include temporary displacement from the project area, entrapment or entrainment resulting in injury or death, and disruption of spawning activities.

The pipeline would be installed beneath the Allegheny River using the HDD method; thereby avoiding direct impacts on the bed and banks of the waterbody. However, in a letter dated January 4, 2016, the PFBC provided the following recommendations to further reduce the potential impacts on the burbot:

- no in-stream activity should be conducted from April 1 to June 15 in perennial streams crossed by the Project in Pennsylvania in order to avoid adverse impacts during the spawning season for burbot;
- in-stream work should be done during low flow periods; and
- approved erosion and sedimentation control measures should be employed for the duration of in-stream work.

National Fuel has agreed to the PFBC's recommended measures for in-stream work in perennial streams crossed by the Project in Pennsylvania and would use the Pennsylvania Manual of Erosion and Sediment Pollution Control to design appropriate measures for minimizing sedimentation into waterbodies. Therefore, impacts on the burbot would be sufficiently minimized.

Wavy-rayed lampmussel

The wavy-rayed lampmussel is found mainly in gravel or sand bottoms of riffle areas in clear, medium-sized streams. As it usually burrows into the substrate, it may be particularly sensitive to siltation (Fisheries and Oceans Canada, 2013).

The PFBC and the NYSDEC indicated that wavy-rayed lampmussels are likely to occur within the Project's crossings of Potato Creek, the Allegheny River, and Oswayo Creek. In-stream construction activities could injure or kill individuals present within the project area. Impacts on mussels would be avoided at the Allegheny River crossing by utilizing the HDD method. As discussed above, National Fuel developed a HDD contingency plan that includes measures for protecting mussels at the Allegheny River that would minimize adverse impacts on mussels from an inadvertent release of drilling fluid. Impacts on the wavy-rayed lampmussel at the Potato Creek and Oswayo Creek crossings would be avoided or minimized by conducting preconstruction surveys for mussels. If present, individual mussels would be relocated to nearby areas of suitable habitat prior to in-stream construction. Therefore, impacts on the wavy-rayed lampmussel would be sufficiently minimized.

Stalked Bulrush

Stalked bulrush is a rhizomatous perennial herbaceous member of the sedge family (Cyperaceae). Members of this species tend to aggregate in dense tussocks and grow up to a height of approximately 6 feet. The leaves are green or brownish, and can be flat or rolled in at the edges. The branched, drooping inflorescence occurs at the top of the plant, which appears in mid to late July. Achene fruits are hairy, scaled, and triangular to circular in cross-section (Flora of North America, 2003).

In a letter dated July 17, 2014, the PADCNR informed National Fuel that it had records of stalked bulrush in the project area, and asked that species-specific surveys be performed. National Fuel completed surveys for stalked bulrush in August 2014, which documented the species in two locations along the proposed project route in McKean County. The current project design would avoid impacts at one location; however, National Fuel could not reroute the

Project at the second location where stalked bulrush was documented due to engineering constraints. Impacts on stalked bulrush could include loss or degradation of habitat and the potential for direct elimination of the population present within the Project's footprint. To minimize these impacts, National Fuel developed a project-specific *Mitigation Plan for Stalked Bulrush*, which was submitted to the PADCNR on October 27, 2015. The PADCNR approved the plan on November 23, 2015. Given that National Fuel would implement all measures contained therein; impacts on the stalked bulrush would be sufficiently minimized.

New York

Bald Eagle

The bald eagle is a large, territorial bird species that is found near open water, nesting in supercanopy tree tops. Nests are typically used until they blow down or collapse. A nest was identified approximately 3,000 feet from the project centerline, near the Potato Creek crossing (MP 12.8). The *National Bald Eagle Management Guidelines* (FWS, 2007) provides that if project activities are less than 660 feet away and in the viewshed of nests, that construction timing restrictions are recommended. Since the project right-of-way is greater than 660 feet away from the existing nest, and the proposed activities are outside the viewshed of the nest, we have determined construction timing measures would not be necessary and impacts on the bald eagle are not anticipated.

Northern Harrier

The northern harrier inhabits open field habitats in the northeast, and specifically utilizes wetland habitats in New York. Recruitment is highly dependent on healthy vole populations. In the winter, harriers generally roost on the ground. The species does migrate, but the Project is in an area where year-round populations are present (NYSDEC, 2014f). Specifically, the NYSDEC indicated the northern harrier is likely to be present within the vicinity of the proposed Pendleton Compressor Station site. National Fuel conducted presence/absence surveys between November 2015 and March 2016, using the NYSDEC's recommended survey protocol. Nine northern harriers have been identified near the proposed Pendleton Compressor Station site to date. Based on those sightings, the NYSDEC requested breeding season surveys for the site during spring and summer 2016. Results of the surveys will determine the need for conservation measures. National Fuel would work with the NYSDEC to develop appropriate measures if individuals are found to be using the site. Potential impacts on the northern harrier would include temporary or permanent displacement from the project area, and loss of habitat. Given the implementation of National Fuel's *Migratory Bird Habitat Conservation Plan*, including the avoidance of clearing between April 1 and July 14, in addition to other protective measures described in this Plan, impacts on this species would be minimized.

Short-eared Owl

The short-eared owl inhabits areas where small mammals are abundant, such as grasslands or marshes. This species is the most diurnal of all owls in the northeastern United States. Similar to the northern harrier, this species does not always migrate. The NYSDEC identified the short-eared owl as a potential inhabitant in the vicinity of the proposed Pendleton

Compressor Station site. National Fuel conducted presence/absence surveys between November 2015 and March 2016, using the NYSDEC's recommended survey protocol. No short-eared owls were identified near the site during those surveys; therefore, we do not anticipate impacts on the short-eared owl.

Eastern Hellbender

In New York, the eastern hellbender is found solely in the Susquehanna and Allegheny River drainages, including their associated tributaries. Hellbenders are typically found in swift running, well oxygenated, unpolluted streams and rivers. An important physical characteristic of these habitats is the presence of riffle areas and abundant large flat rocks, logs, or boards, which are used by the hellbender for cover and nesting (NYSDEC, 2014g). The NYSDEC indicated that the eastern hellbender has been recorded in the vicinity of the proposed crossings of Oswayo Creek in McKean County, Dodge Creek in Allegany County, and Ischua Creek in Cattaraugus County. Additionally, the hellbender was incidentally discovered in Potato Creek in McKean County, Pennsylvania during National Fuel's blue-spotted salamander surveys. Although the eastern hellbender is not state-listed in Pennsylvania, the PFBC has been the lead consulting agency to date in regard to potential project impacts on the species. Potential impacts on the species would include temporary or permanent loss of in-stream habitat, loss of eggs/young, and injury or death of individuals. In a letter to the PFBC dated October 27, 2015, National Fuel proposed to minimize impacts on the hellbender by relocating large in-stream boulders at the Potato Creek crossing upstream and out of the project area. On January 4, 2016, the PFBC approved this mitigation measure with the following recommendations:

- repositioned in-stream "cover rocks" should be relocated under the supervision of persons who possess the necessary Scientific Collectors Permit issued by the PFBC, and the relocation should take place between May 15 and September 1; and

- a copy of the mitigation summary report should be provided to the PFBC documenting the number and locations of cover rocks and hellbenders relocated, following completion of mitigation efforts.

National Fuel has agreed to adhere to the PFBC's recommendations. Therefore, impacts on the eastern hellbender would be sufficiently minimized.

Plants

Creeping sedge occurs in a variety of wetland habitats including fens, bogs, floating mats on lakeshores, and emergent sedge marshes (NYNHP, 2013a). The NYSDEC indicated this species has been documented 0.3 mile from the Project, near MP 64. Field surveys identified suitable wetland habitat for creeping sedge within the project area. National Fuel performed surveys for creeping sedge in June 2015, at the request of the NYSDEC. Although suitable wetland habitat for creeping sedge was identified, the species was not observed during surveys. Therefore, we have determined that impacts on creeping sedge are not expected.

False hop sedge occurs within silver maple-ash swamps, red maple hardwood swamps, floodplain forests, marshes, and shrub swamps. It is often associated with limy clay or other types of calcareous soils (NYNHP, 2013b). At the request of the NYSDEC, National Fuel conducted presence/absence surveys for false hop sedge in late June 2015. False hop sedge was documented in the project area within the Hemstreet Road Wetlands (see section B.3.a.). Subsequently, National Fuel rerouted the Project to avoid impacts on the false hop sedge and its associated wetland habitat. Therefore, we have determined that impacts on false hop sedge would not be significant.

Schweinitz's sedge grows in strongly calcareous, perennially wet, seepy habitats including rich fens, calcareous marshes, swamps, and shores (NYNHP, 2013c). In a letter dated August 26, 2014, the NYSDEC indicated potential habitat would be crossed by the Project near MP 62.3. As a result, National Fuel conducted surveys for Schweintz's sedge in 2015. The species was not identified in the project area during surveys. Therefore, we have determined that impacts on Schweinitz's sedge are not expected.

5. Land Use and Visual Resources

a. Land Use

Construction of the Project would disturb approximately 1,307.0 acres of land, including 901.6 acres for the pipeline right-of-way, 167.5 acres for ATWS area, 90.6 acres for temporary access roads, 91.6 acres for staging/contractor yards, and 55.7 acres for aboveground facilities. Following construction, approximately 619.0 acres would be retained for operation of the Project, including 600.0 acres for the permanent pipeline right-of-way, 1.9 acres for permanent access roads, and 17.9 acres for aboveground facilities. Table B.5.a-1 summarizes the acres of each land use type that would be affected by construction and operation of the project facilities.

Agricultural Lands

Agricultural land in the project area consists of corn, cropland, hay, and improved pasture. The Project would impact approximately 277.4 acres of agricultural land during construction. National Fuel would implement measures outlined in its ESCAMP, including topsoil segregation, compaction mitigation, and waste stone and rock removal, when constructing through agricultural lands to preserve soil productivity. Following construction, agricultural land would be restored to its original use, except at the aboveground facility sites and permanent access roads. Operation of these facilities would remove approximately 8.7 acres of agricultural land from future production.

TABLE B.5.a-1

Acres of Land Affected by Construction and Operation

	Agriculture		Forest[a]		Open Land[b]		Residential		Industrial / Commercial		Roadway		Open Water		Project Total	
Facility	Con.	Oper.	Con.	Oper.	Con.	Oper.	Con.	Oper.	Con.	Oper.	Con.	Oper.	Con.	Oper.	Con.	Oper.
Pipeline Facilities																
Pipeline Right-of-Way	167.3	110.2	537.3	340.7	168.9	131.2	10.0	6.4	9.1	4.3	7.0	5.9	2.0	1.2	901.6	599.9
ATWS	67.3	-	67.3	-	28.0	-	2.9	-	1.0	-	1.0	-	-	-	167.5	-
Access Roads	1.4		-		-		-	-	0.1	-	89.1	-	-	-	90.6	-
Staging / Contractor Yards	26.4	-	14.1	-	7.0	-	-	-	43.1	-	1.0	-	-	-	91.6	-
Subtotal	**262.4**	**110.2**	**618.7**	**340.7**	**203.9**	**131.2**	**12.9**	**6.4**	**53.3**	**4.3**	**98.1**	**5.9**	**2.0**	**1.2**	**1251.3**	**599.9**
Aboveground Facilities																
Pendleton CS[c]	15.0	8.0	-	-	-	-	-	-	-	-	0.1	-	-	-	15.1	8.0
Porterville CS[c]	-	-	0.4	-	-	-	-	-	8.3	-	-	-	-	-	8.7	-
Hinsdale Interconnect[c]	-	-	0.4		13.0	-	-	-	-	-	-	-	-	-	13.4	-
TGP Interconnect[c]	-	-	1.3	0.7	4.5	1.1	-	-	0.1	0.1	-	-	-	-	5.9	1.9
Clermont Interconnect[c]	-	-	-	0.2		0.1	-	-	-	-	-	-	-	-	-	0.3
Wheatfield Dehydration Facility[c]	-	-	2.8	1.6	7.7	4.5	-	-	-	-	0.7	-	-	-	11.2	6.1
XM-10/Empire Tie-In Modification	-	-	0.1	-	0.8	-	-	-	-	-	-	-	-	-	0.9	-
XM-10 Abandoned Meter Station	-	-	-	-	-	-	-	-	0.5	-	-	-	-	-	0.5	-
Mainline Valves[d]	-	0.3	-	0.1	-	0.4	-	-	-	-	-	-	-	-	-	0.8
Access Roads[e]		0.4	-	0.7	-	0.7	-	-		-		0.1	-	-	-	1.9
Subtotal	**15.0**	**8.7**	**5.0**	**3.3**	**26.0**	**6.8**	-	-	**8.9**	**0.1**	**0.8**	**0.1**	-	-	**55.7**	**19.0**
Project Total	**277.4**	**118.9**	**623.7**	**344.0**	**229.9**	**138.0**	**12.9**	**6.4**	**62.2**	**4.4**	**98.9**	**6.0**	**2.0**	**1.2**	**1307.0**	**618.9**

[a] Includes forested uplands and wetlands.

[b] Includes open uplands and scrub/shrub and herbaceous wetlands.

[c] Construction requirements consist of the total of temporary workspace and the permanently maintained area associated with each proposed facility.

[d] MLVs would not require additional land outside of that identified for construction.

[e] Permanent access roads are associated with the MLVs.

Note: CS = Compressor Station; Con. = Construction; Oper. = Operation

Forest Lands

Forest lands in the project area include upland areas that are dominated by trees and shrubs. Approximately 623.7 acres of forest would be affected during construction of the Project. Construction activities in forested areas would require removal of all trees within the construction corridor and workspaces. Impacts would range from long-term within temporary work areas to permanent within areas where forested land would be converted to other land use types. Temporary work areas would be allowed to revegetate following construction. Approximately 340.7 acres of forest land along the permanent pipeline right-of-way would be maintained in an herbaceous state after construction. In addition, operation of the aboveground facilities and permanent access roads would result in the permanent conversion of 3.3 acres of forest to industrial uses.

Open Land

Open land in the project area consists of non-forested areas that are not otherwise classified as agricultural land. The Project would impact approximately 229.9 acres of open land during construction activities. Much of this is in existing rights-of-way where the Project is adjacent to existing utility corridors. The permanent right-of-way in open land areas would be maintained in an herbaceous state and would not result in a change in land use. However, the operation of aboveground facilities and permanent access roads would require the conversion of 6.8 acres of open land to industrial uses. The remaining areas would be restored and revegetated using seed mixes developed by an agronomist for soils in both Pennsylvania and New York as described in National Fuel's ESCAMP.

Residential Land

Construction within residential properties generally necessitates additional mitigation to address safety during construction and to minimize impacts near residences. National Fuel would segregate topsoil in residential areas where appropriate or at the request of the landowner, and would minimize or avoid impacts on landscaping to the extent practicable. For residences within 50 feet of construction workspaces (see table B.5.a-2), National Fuel would implement measures to minimize impacts. These measures include:

- notifying landowners prior to the start of construction activities either in person or by phone and then periodically re-contacting landowners to keep them up to date on construction progress;
- attempting to maintain a minimum distance of 25 feet between any residence or business establishment and the edge of the construction work area;
- controlling fugitive dust within the construction site, using water when warranted;
- ensuring that the pipe would be welded off-site and/or installed as quickly as reasonably possible to minimize the amount of time that a residence is affected by construction, (construction would occur during the daylight hours unless approved or requested by the landowners);

- installing safety fencing along the edge of the workspace for a distance of 100 feet on either side of the residence;
- maintaining traffic flow and emergency vehicle access on residential roadways;
- completing final cleanup, grading, and installation of permanent erosion control devices within 10 days after backfilling the trench, weather permitting; and
- leaving trees in place, where possible, and restoring lawns and landscaping to pre-construction conditions.

TABLE B.5.a-2

Residences within 50 feet of the Project

Nearest Approximate MP	Structure Type	Distance from Construction Workspace or ATWS Area (feet)	Distance from Centerline of Pipeline (feet)	Proposed Mitigation [a]
Mainline Pipeline				
6.9	Residence	29	79	A,B
7.0	Residence	35	110	A,B
12.0	Residence	4	54	A,B,C
12.0	Residence/ Mobile Home	5	120	A,B,C
18.5	Residence/ Mobile Home	7	32	A,B,C
25.8	Residence	5	100	A,B,C
36.7	House slab [b]	0	23	A,B,C
40.9	Residence	14	114	A,B,C
41.0	Residence	41	66	A,B,C
59.4	Residence	47	72	A,B
61.2	Residence	8	76	A,B,C
80.0	Residence	45	95	A,B
89.3	Residence	19	44	A,B,C
93.7	Residence	27	47	A,B
EMP-03 Pipeline				
1.9	Residence	38	63	A,B
1.9	Residence	47	72	A,B

Notes:

[a] Key to Mitigation Measures

A. National Fuel would restore lawns and residential landscaping within the construction work area immediately or as soon as possible after backfilling the trench.

B. National Fuel would install fencing along the residence and construction workspace areas for a distance of 100 feet on either side of the residential structure and would maintain this fencing throughout the open trench phase of construction.

C. National Fuel would utilize a site-specific plan and would utilize either stove-pipe or drag-section construction technique, a 15-foot separation distance from the construction workspace would be maintained, orange safety fence would be installed along the construction right-of-way, and vehicle access to the residence would be maintained at all times during the construction period (See Site-Specific Plan in appendix 8-B). Four site specific drawings for structures within 25 feet of the construction workspace have been submitted to date. Additional site specific drawings will be submitted at a later date.

[b] Structure would be worked around within the workspace.

For each of the residences within 25 feet of proposed construction workspaces, National Fuel has prepared site-specific plans that show how the Project would affect the property and identify construction requirements to minimize impacts on residences (see appendix F). We have reviewed these site-specific residential construction plans and find them acceptable. National Fuel has indicated that if additional residences are identified within 25 feet of the edge of the construction right-of-way, they would implement appropriate measures during construction to protect the residences and occupants.

Construction of the Project would not result in the removal of any residential structures. National Fuel plans to purchase two greenhouses located within the construction workspace and have them removed prior to construction. Workspaces for the Project would not be within 50 feet of any business or commercial areas.

Industrial/Commercial Land

Industrial/commercial lands crossed by the Project consist primarily of utility stations, associated facilities, and transportation corridors (e.g., roads and railroads). The Project would impact approximately 62.2 acres of industrial/commercial land and 98.9 acres of roadways during construction; and 4.4 acres of industrial/commercial land and 6.0 acres of roadways during operation of the Project.

A number of commenters questioned the location of the proposed Wheatfield Dehydrator Facility and Pendleton Compressor Station within areas zoned light-industrial rather than heavy-industrial. Based on our review of the zoning regulations in the Towns of Wheatfield and Pendleton, the Wheatfield Dehydrator Facility and the Pendleton Compressor Station are allowable facilities that meet the zoning standards to be located in Light Industrial Zones in each town.

Open Water

Open water includes major lakes, ponds, and rivers crossed by the Project. Pipeline construction activities would impact approximately 2.0 acres of open water. Waterbodies in the project area are discussed in more detail in section B.2.b.

Landfills and Hazardous Waste Sites

No known contaminated sites have been identified in the project area. The Frontier Chemical – Pendleton Site is a contaminated site over 0.25 mile away from the proposed Pendleton Compressor Station. National Fuel initially proposed a different location for the Pendleton Compressor Station which included the replacement of pipeline adjacent to the Frontier Chemical Site. Commenters expressed concern about the pipeline replacement adjacent to a contaminated site. National Fuel identified the currently proposed location for the Pendleton Compressor Station which would not necessitate the replacement of the pipeline adjacent to the Frontier Chemical Site. Given the distance of this site from the project facilities, no impacts are anticipated on the Frontier Chemical Site.

Public Land, Recreation, and Special Interest Areas

The Project would not cross and is not located within 0.25 mile of any Indian reservations, National Wildlife Refuges, National Wilderness Areas, or registered National Landmarks.

Pennsylvania

The Project does not cross any state forest or game lands in Pennsylvania (PADCNR 2013a, 2013b, 2015b, and 2015c; PGC, 2015).

BicyclePA Route Y/U.S. Route 6

BicyclePA is a system of bicycle routes in Pennsylvania located on highways and rail trails. BicyclePA Route Y is 409 miles long and generally follows U.S. Route 6 through northern Pennsylvania (BikePA.com, 2016). Route 6, also called the Grand Army of the Republic Highway to honor the Union forces during the Civil War, is designated the Route 6 Heritage Corridor and is part of Pennsylvania's heritage areas program (PADCNR, 2015d; Rails-to-Trails Conservancy, 2015; U.S. Federal Highway Administration, 2016). The Project would cross the BicyclePA Route Y/U.S. Route 6 at MP 6.9. National Fuel proposes to use the boring method to cross Route 6 so there would be no impacts on BicyclePA Route Y/U.S. Route 6. No other public recreational trails would be crossed by the Project in Pennsylvania.

New York

Bear Creek State Forest/North Country Scenic Trail

The Project would cross one state forest in New York, the Bear Creek State Forest, between MPs 57.1 and 57.9. The Bear Creek State Forest is a 547-acre forest open year-round and is used for hiking, snowmobiling, horseback riding, and hunting. Within the boundaries of the Bear Creek State Forest, the Project would cross a State Reforestation Area, the Franklinville Snowmobile Trail, the North Country National Scenic Trail/Finger Lakes Trail, and the Creekside Roundup Horse Trail (NYSDEC 2013b, 2015e). Construction of the Project would impact 4.5 acres of the forest with permanent workspace and 2.5 acres with temporary workspace. National Fuel has minimized impacts on the Forest and its visitors by co-locating the pipeline with an existing transmission line. Recreational activities may be restricted during the period of construction due to the presence of workers, equipment, or construction activity. National Fuel would adhere to applicable best management practices, which would be implemented during all soil disturbance and restoration activities. In a letter to the FERC dated March 22, 2016, the NYSDEC recommended certain mitigation measures for construction across this state forest property. National Fuel's consultation with the NYSDEC to identify and address any concerns regarding the Project crossing the Bear Creek State Forest is ongoing.

The NPS administers the North Country National Scenic Trail, a 4,600 mile-long trail reaching from Lake Sakakawea in North Dakota to eastern New York and is responsible for ensuring its protection (NPS, 2016). The North Country Trail is part of the Finger Lakes Trail system where it passes through the Bear Creek State Forest (North Country Trail Association, 2016; NYSDEC, 2015e). National Fuel is coordinating with the NPS, the Bear Creek State Forest, and the Finger Lakes Trail Conference. On March 16, 2016, National Fuel filed its Draft

North Country National Scenic Trail/Finger Lakes Trail Crossing Mitigation Plan to identify suitable measures to minimize disturbance to the trail and its visitors. The NPS reviewed the Draft Mitigation Plan and in a letter dated April 26, 2016, approved the plan.

National Fuel would notify the Finger Lakes Trail Conference Regional Trail Coordinator at least one week prior to construction activities to provide notice of the construction schedule, upon completion of all construction activities, and if there are any changes to the Project where it crosses the trail. National Fuel would install signage at connecting trailheads and at the trail crossing during construction a minimum of one day prior to construction; this signage would remain until construction is complete to notify users of the construction activities. National Fuel estimates pipe installation and trench backfilling would take approximately 1 day; there would be no need to establish a reroute of the trail during construction due to the short duration the trench would be open in this area. National Fuel would consult with the Finger Lakes Trail Conference Regional Trail Coordinator prior to construction to identify resurfacing standards and specifications which would be implemented after the pipeline is installed. To ensure potential impacts on Bear Creek State Forest Trail are minimized in accordance with the NPS and NYSDEC recommendations, **we recommend that:**

- **<u>Prior to construction in the Bear Creek State Forest</u>, National Fuel should file with the Secretary, for review and written approval by the Director of OEP, its final plan for construction across the state forest including any special mitigation measures, restoration measures, and any applicable agency correspondence.**

The Town of Pendleton owns a parcel of land adjacent to the proposed Pendleton Compressor Station site that it plans to convert to a park with trails and wildlife viewing. The EMP-03 Pipeline would cross a portion of the tract containing the trail. The Town of Pendleton also owns a recreational trail that is within 300 feet of the proposed Pendleton Compressor Station site.

The proposed EMP-03 Pipeline route is within approximately 200 feet of the Tan Tara Golf Club, a private 18-hole golf course located in North Tonawanda. There would not be any direct impacts on the golf course. Visual impacts during construction of the EMP-03 Pipeline are expected to be minimal and temporary.

The proposed Pendleton Compressor Station site is located adjacent to property owned by the Tonawanda Sportsmen's Club, a shooting club for hunting, archery, pistol, rifle, and trap/skeet shooting. The nearest point of the shooting range is 2,400 feet from the proposed compressor station and dense forestland separates the shooting range from the compressor station site.

The Project crosses two properties in New York that are part of the NRCS Wetlands Reserve Program. National Fuel would restore these properties to pre-construction conditions upon completion of the Project.

There could be some temporary, short-term impacts on residential land during construction of project facilities and forest land during the life of the Project. National Fuel would adhere to all requirements outlined in its site-specific residential construction plans to

limit effects to construction only. Additionally, National Fuel would adhere to its ESCAMP, which would limit the extent of forest land impacts. Through implementation of these measures, as well as our recommendation regarding the Bear Creek State Forest, National Fuel would avoid long-term impacts on recreational uses in the project area. Therefore, we conclude that construction and operation of the Project would not adversely affect local land uses.

b. Coastal Zone Management Areas

The Project is not located within any designated Coastal Zone Management areas in Pennsylvania (PADEP Water Planning Office, 2014). A small portion of the Blasdell-Metalico Pipe Yard would be within the New York State Coastal Zone in Erie County, New York. Project activity at this site would consist of pipe storage and contractor yard and would be temporary in nature for the duration of the construction phase of the Project. The existing land use of this site is industrial and no new or permanent structures would be built.

National Fuel is in communication with the New York State Department of State, Coastal Management Program Consistency Review Unit in regards to Coastal Consistency Review for the Project.

The portion of the pipe yard that would be within the coastal zone consists almost entirely of an existing access road and existing active rail spur to the site. The access road serves the property owner (Metalico). Prior to the November 2009 Town of Hamburg Local Waterfront Revitalization Program Amendment, this area was included within the Local Waterfront Revitalization Plan boundary. In the November 2009 amendment, however, it was removed "to place a greater focus on the waterfront, and eliminate large parcels of industrial development… that have no relationship with the lake." Furthermore, "the lands that were removed from the [Local Waterfront Revitalization Area] through this modification have no direct connection to or reliance upon the waterfront and the Town has no long term plans to change the nature of the land use in this area." Therefore, we do not anticipate that the Project would be inconsistent with the NYSDEC Coastal Management Program.

c. Planned Developments

There is one site approved for a subdivision on Beach Ridge Road within 0.1 mile of the proposed Pendleton Compressor Station. No direct impacts on the subdivision are anticipated. Potential health and safety issues are discussed in section B.9. Visual impacts are addressed below.

There are no known planned commercial developments within 0.25 mile of the Project.

d. Airports

The Niagara Falls International Airport and Niagara Falls Air Reserve Station are located approximately 6.5 miles west of the proposed Pendleton Compressor Station. The North Buffalo Suburban Airport is approximately 5.5 miles east of the proposed Pendleton Compressor Station. Impacts on aircraft and flights due to compressor station operations are not anticipated.

e. Visual Resources

The Project would be co-located with existing rights-of-way for approximately 68 percent of the pipeline route. These existing rights-of-way have been affected previously by other utility activities and are maintained periodically. Construction activities within or adjacent to existing rights-of-way typically reduce impacts on visual resources because new fragmentation of vegetation is minimized. The EMP-03 Pipeline would not be co-located with existing rights-of-way.

The Project would not cross any designated scenic areas. Impacts on visual resources would occur primarily during active construction and would result from the removal of vegetation and the presence of heavy equipment. After completion of construction, the temporary rights-of-way would be restored to approximate preconstruction contours and allowed to revert to preconstruction uses and cover type. The long-term visual impacts resulting from the widening of existing right-of-way and creation of a new easement would be permanent but minor.

The Pendleton Compressor Station would be a new industrial facility located in an otherwise mixed agricultural and residential area. We received several comments regarding the potential visual impacts of this facility due to existing and planned residential neighborhoods in the vicinity. Due to existing forested areas that would not be removed as part of the Project, there is adequate visual screening between the existing and planned homes nearby. In addition, National Fuel plans to design this facility to blend in with existing surroundings in a structure appropriate for the agricultural setting and would be set back from the road with visual screening consisting of berms and trees (figure B.5.e-1).

Even so, it would introduce new industrial buildings. To ensure that National Fuel's plan adequately addresses the commenters' concerns with these new structures, **we recommend that:**

- **<u>Prior to construction</u>, National Fuel should file with the Secretary, for review and written approval by the Director of the OEP, its final visual screening plan for the Pendleton Compressor Station. The plan should, at a minimum, show the locations of facility components, roads, parking areas, and include a description of the types and quantities of vegetation screening to be planted. The plan should also describe how National Fuel's building design is consistent with the existing landscape.**

The Wheatfield Dehydration Facility would be located within an industrial area consisting of mixed industrial buildings, open land, and some forest. To the south of the site is an electrical transmission line and a railroad corridor. There is ample visual screening from residences on the north side of the proposed site in the form of trees that would not be removed as part of the Project.

National Fuel's proposed modifications at the existing Porterville Compressor Station would involve minor modifications that are entirely within the existing facility boundaries. National Fuel would implement visual screening methods on a site-specific basis depending on existing vegetation at each location for the other aboveground facilities. Given the existing

visual screening, co-location with existing utility rights-of-way or industrial facilities, and our recommendation above, we conclude that the aboveground facilities would represent minor visual impacts on the surrounding areas.

Figure B.5.e-1. Rendering of the proposed Pendleton Compressor Station.

After construction, most areas that would be disturbed by the pipelines would be restored and returned to preconstruction conditions with federal, state, and local permits; landowner agreements; and National Fuel's easement requirements. The primary long-term visual effects associated with the pipelines would be the clearing of forested vegetation. The permanent visual impacts of the pipelines would be limited to areas of tree clearing not co-located with existing rights-of-way. Implementation of National Fuel's plans to blend the Pendleton Compressor Station with the existing environment and implementation of our recommendation for screening would prevent that facility from having a long-term adverse visual impact on the area.

6. Cultural Resources

Section 106 of the National Historic Preservation Act (NHPA), as amended, requires the FERC to take into account the effect of its undertakings (including the issuance of Certificates) on any properties listed on, or eligible for listing on, the National Registry of Historic Places (NRHP) and to provide the Advisory Council on Historic Preservation (ACHP) an opportunity to comment on the undertaking. National Fuel, as a non-federal party, is assisting the FERC in meeting its obligations under Section 106 of the NHPA by providing us with information, analyses, and recommendations, as outlined in our *Guidelines for Reporting on Cultural Resources Investigations for Pipeline Projects* (18 CFR 380.12(f)). However, the FERC remains responsible for all final determinations.

The FERC defines the area of potential effect (APE) for direct effects to include the construction right-of-way along the pipeline route, ATWS areas, compressor/meter station,

staging areas, and new or to-be-improved access roads. The APE for indirect (visual or audible) effects includes those aboveground ancillary facilities or other project elements that are visible from historic properties in which setting contributes to their NRHP-eligibility.

National Fuel conducted cultural resource surveys for the Project including the pipeline route and at aboveground facilities. Survey included background research, archeological survey, and an inventory of all historic structures within the project viewshed. Archeological survey was conducted within a 300-foot-wide corridor along the proposed pipeline routes and reroutes, a 50-foot-wide corridor along access roads, and the total acreage of aboveground facility construction footprints and contractor/staging yard locations. Archaeological survey included shovel testing of high probability areas and reconnaissance survey of low probability or high slope areas.

Pennsylvania

Approximately 27.8 miles of the total 99.0 miles of pipeline and two pipe/contractor yards are within Pennsylvania. Aboveground historic resource survey has been completed for Pennsylvania (Peltier and Villacorta, 2016b). Archaeological survey was completed along 25.9 miles of the proposed pipeline route, at two pipe/contractor yards, and access roads identified to date (Locking and Padamonsky, 2015; Locking et al., 2015a). Archaeological surveys have not been completed along 1.9 miles of the proposed pipeline route due to landowner restrictions (see table B.6-1).

TABLE B.6-1

Areas Remaining for Phase I Archaeological Survey

	Milepost	
Pipeline Facility/County, State	Start	End
Pipeline		
McKean, PA	17.1	18.5
McKean, PA	20.4	20.9
Cattaraugus, NY	61.5	62.2
Erie, NY	72.0	72.1
EMP-03		
Niagara, NY	0.0	0.7

Two new archaeological sites and one isolated find were identified during archaeological survey. One site is recommended potentially eligible for listing on the NRHP and would be avoided by the Project; if the site cannot be avoided, Phase II testing would be conducted to determine its eligibility for listing on the NRHP. The isolated find and remaining site are recommended as not eligible for listing on the NRHP.

There are 2 previously recorded aboveground historic resources that are in the direct APE and 12 newly recorded historic structures which are in the indirect APE. The two resources within the direct APE are historic linear features, the Western New York and Pennsylvania Railway and the Pittsburgh, Shawmut & Northern Railroad; the eligibility of both resources has not been determined. The Project crosses the Western New York and Pennsylvania Railway in two locations and the Pittsburgh, Shawmut & Northern Railroad in one location. All three crossings contain abandoned grades with no existing rails, and there are no aboveground historic resources associated with either railway in the vicinity of these locations. The railroad grade in two of the locations is currently used as a snowmobile/all-terrain vehicle trail, and one has been removed and is currently an agriculture field. National Fuel would utilize the open-cut method to cross the two existing grades and would restore the grades to preconstruction contours. Ten of the newly recorded historic structures are recommended as not eligible for listing on the NRHP; additional information is required in order to make eligibility recommendations for the remaining two historic structures. There may be temporary indirect effects to the newly recorded historic resources as construction may be visible and construction noise may be heard.

National Fuel submitted the initial Phase I archaeological survey report and historic architecture survey report to the Pennsylvania State Historic Preservation Office (SHPO) on April 7, 2015, and requested concurrence on the recommendations in the reports. In a letter dated May 7, 2015, the Pennsylvania SHPO responded to the submission of the Phase I archaeological survey report and concurred with the recommendations in the report.

In a letter dated May 14, 2015, the Pennsylvania SHPO provided comments and recommendations for report revisions to the Phase I historic architecture survey report. National Fuel submitted a revised historic architecture survey report, which included the requested revisions and results of all surveys, to the Pennsylvania SHPO on January 12, 2016, and requested concurrence with the recommendations in the report. In a letter dated February 17, 2016, the Pennsylvania SHPO requested additional information on two resources identified in the historic structures survey report before providing comment on the identification of historic properties and assessment of effects. In a letter dated June 23, 2016, the Pennsylvania SHPO concurred that the Project will not affect aboveground historic properties.

National Fuel submitted an addendum Phase I archaeological survey report on January 13, 2016, and requested concurrence with the recommendations in the report. In a letter dated February 19, 2016, the Pennsylvania Historical and Museum Commission concurred with the eligibility and avoidance recommendations in the archaeological survey report and requested testing for buried archaeological resources at the Port Allegheny pipe and contractor yards if ground disturbance is required at these locations.

Results of additional surveys of areas not previously surveyed will be provided in subsequent addendum reports when surveys are complete.

New York

Approximately 71.2 miles of the total 99.0 miles of proposed pipeline are within New York; this includes approximately 69.1 miles of mainline pipeline and 2.1 miles of the EMP-03 pipeline. Aboveground historic resources survey and archaeological survey were conducted at the Pendleton and Porterville Compressor Stations, the Wheatfield Dehydration Unit, the TGP Interconnect Meter Station, tie-in facilities, and access roads identified to date. Aboveground historic resource survey was completed along the entire 69.1 miles of the proposed mainline pipeline route and 2.1 miles of the EMP-03 route (Peltier and Villacorta, 2016a). Archaeological survey was completed along 68.8 miles of pipeline rights-of-way (Locking et al., 2015b; Locking et al., 2016). Archaeological surveys have not been completed along the remaining 2.4 miles of pipeline and at the Line X tie-in (see table B.6-1).

Two new archaeological sites were identified during the archaeological survey. National Fuel recommended no additional investigation at one new archaeological site, identified as the Hinsdale Yard Site. The other new archaeological site, identified as the Brown Site, was evaluated and recommended eligible for listing in the NRHP (Stuck and Johnston, 2016). In December 2015, additional testing consisting of mechanical topsoil removal was conducted in the portion of the site within the APE. As a result of this additional testing, National Fuel recommended that although the site is eligible, the portion of the site within the right-of way has exhausted the research potential and no additional work was recommended. Surveys did not identify any historic architectural resources within the project area.

Thirty-one newly recorded resources were identified during the aboveground historic resources survey; 28 of these resources are recommended as not eligible for listing in the NRHP; additional information is required in order to make eligibility recommendations for the remaining 3 historic structures. There may be temporary indirect effects to the newly recorded historic resources as construction may be visible and construction noise may be heard.

National Fuel submitted the initial archaeological survey report, addendum report, historic architecture survey report, and Phase II evaluation of the Brown Site to the New York SHPO. In a letter dated July 7, 2015, the New York SHPO provided comments and recommendations for report revisions to the Phase I historic architecture survey report. National Fuel submitted a revised historic resources report. In a letter dated March 3, 2016, the New York SHPO concurred that the Project would have no adverse effect on aboveground historic properties. In a letters dated June 29, 2015, April 22, 2016, and April 24, 2016, the New York SHPO concurred with the results of the archaeological survey report, addendum survey report, and Phase II Evaluation, respectively.

Results of additional surveys of areas not previously surveyed will be provided in subsequent addendum reports when surveys are complete.

Unanticipated Discoveries Plan

National Fuel prepared Unanticipated Discovery Plans for New York and Pennsylvania that outline the procedures that would be followed in the event that unanticipated cultural resources or human remains are encountered during construction of the Project. We have reviewed these plans and find them acceptable.

Native American Consultation

On July 17, 2014, National Fuel sent letters to representatives of the Native American tribes listed below. The letter introduced the proposed project and requested comments regarding the potential for the Project to affect cultural or religious sites significant to the tribe.

- Absentee-Shawnee Tribe of Oklahoma
- Eastern Shawnee Tribe of Oklahoma
- Seneca Nation of Indians
- Seneca-Cayuga Tribe of Oklahoma, Shawnee Tribe
- Tonawanda Band of Seneca Indians

National Fuel, at the request of the Office of Parks, Recreation, and Historic Preservation, sent copies of the Phase I survey report in New York to the Tonawanda Band of Seneca Indians, the Seneca Nation, and the Tuscarora Nation. The Tonawanda Band of Seneca Indians and the Seneca Nation reviewed the report and have no objections to National Fuel initiating Phase II surveys. The Seneca Nation requested to be notified of the planned survey dates and if burials are encountered. No response has been received from the Tuscarora Nation to date.

On November 18, 2015, National Fuel sent copies of the Brown Site Topsoil Stripping Plan to the Tonawanda Band of Seneca Indians, the Seneca Nation, and the Tuscarora Nation. No response was received prior to the topsoil stripping in January 2016. No additional responses have been received.

On, October 22, 2014, April 29, 2015, and November 22, 2015, we sent our Notices of Intent to tribes listed above. On December 12, 2014 we sent the same tribes a letter requesting consultation. No responses have been received to date.

Compliance with the NHPA

Compliance with Section 106 of the NHPA has not been completed for the Project. National Fuel has not completed all necessary cultural resources surveys and evaluations. Consultation with the SHPOs is not yet complete. If NRHP-eligible resources are identified that cannot be avoided, National Fuel would prepare treatment plans for review and approval by the appropriate parties including the FERC, the SHPO, and Indian tribes. The FERC would afford the ACHP an opportunity to comment in accordance with 36 CFR 800.6. Implementation of a treatment plan would only occur after certification of the Project and after the FERC provides written notification to proceed.

To ensure that the FERC's responsibilities under the NHPA and its implementing regulations are met, **we recommend that:**

- **National Fuel should not begin implementation of any treatment plans/measures (including archaeological data recovery); construction of facilities; or use of any staging, storage, or temporary work areas and new or to-be-improved access roads in areas not previously evaluated or where access was denied <u>until:</u>**

a. National Fuel files with the Secretary:

- **all cultural resources survey reports, including evaluation reports, avoidance plans, and treatment plans;**
- **comments on survey reports, evaluation reports, avoidance plans, and treatment plans from the SHPO as well as any comments from federally recognized Indian tribes;**
- **comments from the ACHP if historic properties would be adversely affected; and**

b. The FERC staff reviews and the Director of OEP approves all cultural resources survey reports and plans, and notifies National Fuel in writing that treatment plans/measures may be implemented and/or construction may proceed.

All material filed with the FERC that contains location, character, and ownership information about cultural resources must have the cover and any relevant pages therein clearly labeled in bold lettering: "CONTAINS PRIVILEGED INFORMATION – DO NOT RELEASE."

7. Socioeconomics

The potential socioeconomic effects of construction and operation of the Project include changes in population levels or local demographics, increased opportunities for employment, increased demand for housing and public services, transportation impacts, and an increase in government revenue associated with sales, payroll, and property taxes within the project area. The project area encompasses McKean County, Pennsylvania, and Allegany, Cattaraugus, Erie, and Niagara Counties, New York.

a. Population and Employment

Table B.7.a-1 provides a summary of selected demographic and socioeconomic conditions by state and county for the project area. Population estimates within the project area range from approximately 43,000 in McKean County, Pennsylvania, to more than 900,000 in Erie County, New York (U.S. Census Bureau, 2012a). The civilian labor force within the counties crossed by the Project includes more than 650,000 individuals whose major employment sectors are educational, health, social services, and manufacturing. Unemployment rates in the counties crossed by the project range from 4.6 to 8.0 percent (U.S. Bureau of Labor Statistics, 2015).

TABLE B.7.a-1

Existing Economic Conditions

State/ County	Population [a]	Population Density (per square mile) [b]	Per Capita Income [c]	Rental Vacancy Rate (percent) [d]	Civilian Labor Force [e]	Unemployment Rate (percent) [e]	Major Industry [f]
Pennsylvania	12,699,589	283.9	$28,190	6.3	6,460,354	4.6	Educational, health, and social services
McKean, PA	43,451	44.4	$22,471	3.1	20,762	4.8	Educational, health, and social services
New York	19,398,125	411.2	$32,104	4.6	9,636,025	6.3	Educational, health, and social services
Allegany, NY	48,837	47.6	$20,571	6.8	23,935	7.5	Educational, health, and social services
Erie, NY	919,542	881.4	$27,700	5.5	461,956	7.4	Educational, health, and social services
Cattaraugus, NY	80,166	61.4	$21,726	4.5	39,861	8.0	Educational, health, and social services
Niagara, NY	215,869	414.4	$25,492	12.5	109,993	8.0	Manufacturing

Sources:
[a] U.S. Census Bureau, 2012a
[b] U.S. Census Bureau, 2010
[c] U.S. Census Bureau, 2012b
[d] U.S. Census Bureau, 2012c
[e] U.S. Bureau of Labor Statistics, 2015
[f] U.S. Census Bureau, 2012d

Construction of the Project is expected to begin in late 2016 and last for approximately 9 months. The peak construction workforce would be 750 workers, of which it is anticipated a maximum of 50 percent (375 workers) would be non-local. The total workforce would consist of 600 workers for pipeline construction and 150 workers for the construction of the aboveground facilities or other miscellaneous tasks. The peak number of workers associated with construction of aboveground facilities would be approximately 25 workers each at the TGP Interconnect, Clermont Tie-in, and Hinsdale Metering and Regulating (M&R) Station; 70 workers each at the Pendleton and Porterville Compressor Stations; and 35 workers at the Wheatfield Dehydration Facility. Workers would be distributed along the length of the project route, thereby minimizing the potential impact on population levels and demographics in any individual county. The influx of non-local workers would result in a temporary, negligible population increase within the affected counties.

National Fuel estimates that construction of the Project would result in the hiring of a minimum of 375 local workers. Additional jobs would also be created because of secondary activities associated with construction of the Project. These jobs would represent a temporary, minor increase in employment within the area.

During operation and maintenance of the pipeline and aboveground facilities, the Project would primarily be staffed by National Fuel personnel from the local labor force; one additional permanent position would be created at the Pendleton Compressor Station. This would represent a negligible, permanent increase in population and employment.

b. Housing

Rental housing vacancy rates within the counties crossed by the Project range from 3.1 percent in McKean County, Pennsylvania, to 12.5 percent in Niagara County, New York. Within these counties, there are approximately 12,311 rental units and 175 hotels (U.S. Census Bureau, 2012c; Yellowbook, 2015).

At its peak, construction of the Project would require approximately 375 non-local workers, most of whom are not expected to be accompanied by families. The temporary housing available within the project area would be capable of meeting the temporary and moderately increased demand for housing resulting from construction of the Project. The Project could have a short-term positive impact on the area rental industry through higher occupancy rates.

The limited number of permanent employees who would be hired for operation of the project facilities would have a negligible long-term effect on housing demand.

c. Public Services

Construction of the Project could temporarily increase demand for medical, police, and fire protection services in the event of a fire or other emergency. National Fuel would work with local law enforcement and emergency response agencies to coordinate effective emergency procedures for the Project during construction and operation (see section B.9). Table B.7.c-1 summarizes the existing public services in the counties crossed by the Project. Based on the number of police and fire stations and emergency medical services in the area, it is unlikely that the Project would represent an increased burden on the public services in the area.

TABLE B.7.c-1

Existing Public Services in the Counties Crossed

County/State	Hospitals [a]	Police Services	Fire Services
McKean, PA	2	1 county; 6 municipal [b]	12 stations [b]
Allegany, NY	2	1 county; 11 municipal [c]	20 stations [d]
Cattaraugus, NY	1	1 county; 8 municipal [d]	33 stations [d]
Erie, NY	7	1 county; 8 municipal [d]	112 stations [d]
Niagara, NY	3	1 county; 6 municipal [d]	36 stations [d]

Source:
[a] American Hospital Directory, 2014
[b] Homefacts, Pennsylvania, 2014
[c] Allegany County Government, 2014
[d] Homefacts, New York, 2014

d. Transportation

Construction of the Project could result in minor, short-term negative impacts on the transportation network in the project area. Due to the rural nature of the area, the limited duration of construction, and the movement of equipment, materials, and personnel to work areas at non-peak travel times, impacts on local traffic are expected to be minor and short-term. Construction hours would typically be scheduled to take advantage of daylight hours; therefore,

most workers would commute to and from the construction right-of-way during off-peak hours, minimizing the effects on local commuters. Workers would be encouraged to carpool to further reduce any potential effects on traffic flow or volume. Minimal parking may also occur along access roads. If necessary, National Fuel would identify approved off-site parking areas and use buses to transport workers to minimize traffic impacts.

Appropriate traffic control measures, such as flagmen and signs, would be used to ensure safety on local roads. Prior to construction, National Fuel would consult with relevant agencies in each county crossed by the Project to obtain any necessary road crossing and related permits. National Fuel would utilize construction techniques designed to minimize disruptions to traffic flow patterns and to allow for continued access of emergency services. The Project would cross a total of 91 public roads (see table A.7.b-2). National Fuel would use conventional bore or open-cut construction techniques, depending on jurisdictional requirements, to cross all paved public roads. Because the conventional bore construction technique avoids disturbing the road surface, no impacts on the road surface or traffic flow would be expected. Gravel or private roads would be crossed via open-cut methods following negotiations with affected parties. There would be minor temporary impacts on roads that are open cut. National Fuel would minimize the temporary impacts by placing metal plates across the open trench as necessary in order to maintain traffic flow and/or providing alternate access routes if a road closure is necessary. National Fuel would return roadways to their original condition when construction is complete. As a result of these measures, we do not expect construction of the Project to have a major impact on road traffic.

e. Property Values

A number of commenters questioned the location of the proposed Wheatfield Dehydration Facility and Pendleton Compressor Stations. These commenters expressed concern about the potential negative impact the facilities would have on the property values of homes in the vicinity. The impact that a natural gas project could have on the value of a land parcel depends on many factors, including the size of the parcel, the parcel's current value and land use, and the value of other nearby properties. However, subjective valuation is generally not considered in appraisals. This is not to say that the Project would not affect resale values. There are a number of variables that may influence whether the presence of a pipeline easement on a parcel of land, or the parcel's location near a pipeline facility may impact resale values, each dependent on the priorities of the purchaser. Potential purchasers may make a decision based on intended future use and, if the presence of the Project would make that use infeasible, it is possible that that potential purchaser would not acquire the parcel. However, each potential purchaser has differing criteria and means.

The Project's pipeline corridors would follow established right-of-way corridors for much of the route, so it is anticipated that impacts to property values as a result of the Project would be negligible. Several studies have been conducted that have determined that a parcel's proximity to natural gas pipelines has no discernible impact on real estate values (Diskin et al., 2011; Fruits, 2008; Interstate Natural Gas Association of America Foundation, Inc., 2001; Palomar Gas Transmission, 2008; Wilde et al., 2014). Additionally, National Fuel commissioned an analysis to study the impact on values of properties located within the vicinity of compressor stations. While none of the facilities evaluated have the exact same characteristics

in terms of proximity to residences or amount of screening, they are all natural gas compressor stations and provide a reasonable basis for comparison. The study evaluated sales near seven compressor stations in New York and found no market data or evidence to indicate that being located near a compressor station negatively impacted property re-sale values (Real Property Services, 2015).

Landowners are responsible for all property taxes levied against parcels, and this responsibility would be independent of the existence of any related pipeline easements. However, if a landowner felt that the Project, should it be constructed, would reduce the value of their property, he or she could appeal the assessment and subsequent property taxation to the local property taxation agency. If the parcel were re-appraised, the landowner would then be responsible for property taxes based upon an appraisal that directly incorporated the pipeline easement or proximity to one of the facilities.

f. Economy and Tax Revenues

Construction and operation of the Project would have a beneficial impact on tax revenues. Construction payroll is estimated to be $150 million for the Project. A portion of the Project's construction payroll would be spent locally for the purchase of housing, food, and entertainment during construction. A portion of the materials for construction of the Project (e.g., fuel; rental equipment; and stone, building, and welding products) would be purchased from vendors within the counties crossed by the Project. The value of these materials could total $95 million. The majority of construction-related expenditures would be subject to state sales taxes of 6 to 8.5 percent. The increase in sales tax collected would represent a minor, short-term increase in government revenues.

Operation of the Project would provide additional tax revenues through ad valorem and property taxes, estimated to be $18.1 million annually. Table B.7.f-1 summarizes the estimated taxes that would be generated annually in each county.

TABLE B.7.f-1

Annual Ad Valorem and Property Taxes Associated with the Project

County, State	Ad Valorem and Property Taxes Generated
McKean, PA	Exempt
Allegany, NY	$1,839,573
Cattaraugus, NY	$5,943,572
Erie, NY	$5,057,707
Niagara, NY	$5,257,220
Project Area Total	$18,098,072

g. Environmental Justice

Executive Order 12898 on Environmental Justice recognizes the importance of using the NEPA process to identify and address, as appropriate, any disproportionately high and adverse health or environmental effects of federal programs, policies, or activities on minority populations and low-income groups. The provisions of Executive Order 12898 apply equally to Native American programs. Accordingly, the CEQ has called on federal agencies to actively scrutinize the following issues with respect to environmental justice:

- the racial and economic composition of affected communities;
- health-related issues that may amplify project effects to minority or low-income individuals; and
- public participation strategies, including community or tribal participation in the NEPA process.

Table B.7.g-1 summarizes the minority and low income populations throughout the project area.

The EPA provides guidance on determining whether there is a minority or low-income community to be addressed in a NEPA analysis (CEQ, 1997a). According to this guidance, minority population issues must be addressed when, in aggregate, minorities comprise over 50 percent of an affected area or when the minority population percentage of the affected area is substantially greater than the minority percentage in the larger area of the general population. Low-income populations are those that fall within the annual statistical poverty thresholds from the U.S. Department of Commerce, Bureau of the Census Population Reports, Series P-60 on Income and Poverty. The U.S. Census Bureau defines a poverty area as a census tract or other area where at least 20 percent of residents are below the poverty level (U.S. Census Bureau, 2013).

TABLE B.7.g-1

Demographics and Low Income Populations in the Project Area

State/County	Percent of Persons Below Poverty Level	Percent Minority
Pennsylvania	13.1	20.6
McKean, PA	14.6	5.6
New York	14.9	41.7
Allegany, NY	17.1	4.6
Cattaraugus, NY	17.2	8.1
Erie, NY	14.2	22.3
Niagara, NY	13.3	12.7

As shown in table B.7.g-1, no counties crossed by the Project have poverty levels greater than 20 percent or minority populations that comprise more than 50 percent of the population (U.S. Census Bureau, 2012b). The project route was not sited based on the socioeconomic conditions of local populations, but rather was selected based on existing utility infrastructure. Overall, there is no evidence that the Project would cause a disproportionate share of adverse environmental or socioeconomic impacts on any racial, ethnic, or socioeconomic group.

8. Air Quality and Noise

a. Air Quality

Construction and operation of the Project would affect local and regional air quality. The following sections describe the existing air quality in the project area, regulatory and permitting requirements to which the Project would be subject, potential impacts of project construction and operation, and proposed mitigation measures.

Existing Air Quality/Climate

The project area has a humid continental climate, with cold, snowy winters and warm, wet summers. Summers are typified by warm, temperate days with highest recorded 2013 temperature of 92 degrees Fahrenheit (°F) at both the Buffalo and Niagara Falls airports. Winters are cold, with the lowest recorded 2013 temperatures of 1 °F and -3 °F at the Buffalo and Niagara Falls airports, respectively. Precipitation is distributed evenly throughout the year. Proximity to the Great Lakes results in significant cloudiness and precipitation, as weather systems traveling over the lakes pick up moisture, and cooler air masses from the west and north converge to create a regularly unsettled weather pattern.

The Clean Air Act of 1970 (CAA) and the EPA designate seven pollutants for which the National Ambient Air Quality Standards (NAAQS) are promulgated, referred to as "criteria pollutants" and as defined in 40 CFR 50. The NAAQS have been designed to protect human health and the environment from airborne pollutants. The NAAQS for sulfur dioxide (SO_2), nitrogen dioxide, particulate matter with an aerodynamic diameter less than 10 microns (PM_{10}), particulate matter with an aerodynamic diameter less than 2.5 microns ($PM_{2.5}$), carbon monoxide (CO), ozone, and lead were established to protect human health (primary standards) and human welfare (secondary standards) from airborne pollutants. The current NAAQS are available on the EPA's website.[9] Individual states have also developed air quality standards or have adopted federal air quality standards. State air quality standards cannot be less stringent than the NAAQS. New York has state air quality standards, applicable to the Project, that are in addition to the NAAQS. The current New York State air quality standards are available on the NYSDEC's website.[10]

Greenhouse gases (GHGs), the most common of which are carbon dioxide (CO_2), methane (CH_4), nitrous oxide (N_2O), ozone, hydrofluorocarbons, and perfluorocarbons, are naturally occurring pollutants in the atmosphere as well as products of human activities, including burning fossil fuels. Fossil fuel combustion emits CO_2, CH_4, and N_2O. GHG emissions are generally calculated in terms of carbon dioxide equivalents (CO_2e) where the warming potential of each gas is expressed as a multiple of the warming potential of CO_2e. While air quality standards have not been developed for GHG emissions, they are regulated on a state and federal level.

The NYSDEC and EPA provide ambient air quality monitoring data for use to characterize ambient concentrations of criteria pollutants. Table B.8.a-1 summarizes the available historical monitoring data considered from monitors closest to the project facilities for the period between 2008 and 2013. The most recent 3-year period of available monitoring data was selected for each monitor, as 3-year periods are normally used to assess background air quality for regulatory purposes. Table B.8.a-1 lists the background air quality corresponding to the statistical forms used to evaluate compliance with the NAAQS. These data were obtained from air quality monitoring data tables from the NYSDEC Ambient Air Quality Report for 2013 and 2014 (NYSDEC, 2014i) and the EPA AirData air quality monitoring database (EPA, 2014c).

---

9 The current NAAQS can be accessed online at https://www.epa.gov/criteria-air-pollutants/naaqs-table.

10 The New York State air quality standards can be accessed online at http://www.dec.ny.gov/chemical/8542.html.

TABLE B.8.a-1

Monitored Ambient Air Quality Data from the Project Area

Pollutant	Averaging Period	Rank	Year 1	Year 2	Year 3	3-year Average	Applicable NAAQS	Units	Monitor
CO	1-hour [a]	2nd high	1.9	1.6	1.6	N/A	35	ppm	Buffalo
	8-hour [a]	2nd high	1.3	1.1	1.3	N/A	9	ppm	Buffalo
	1-hour [b]	2nd high	1.1	1.3	1.3	N/A	35	ppm	Niagara Falls
	8-hour [b]	2nd high	1.0	1.0	1.1	N/A	35	ppm	Niagara Falls
SO_2	1-hour [c]	99th percentile	N/A	N/A	N/A	25	75	ppb	Buffalo
	3-hour [a]	2nd high	11	22	18	N/A	500	ppb	Buffalo
NO_2	Annual [b]	Mean	6.44	8.32	8.19	N/A	53	ppb	Amherst
	1-hour [b]	98th percentile	N/A	N/A	N/A	42	100	ppb	Amherst
	Annual [d]	Mean	8.7	10.38	10.46	N/A	53	ppb	Buffalo
	1-hour [d]	98th percentile	54.6	46.6	45.6	48.8	100	ppb	Buffalo
Ozone	8-hour [a]	4th high	N/A	N/A	N/A	73	75	ppb	Amherst
	8-hour [a]	4th high	N/A	N/A	N/A	73	75	ppb	Middleport
$PM_{2.5}$	24-hour [d]	98th percentile	N/A	N/A	N/A	19.7	35	$\mu g/m^3$	Buffalo
	Annual [d]	Mean	N/A	N/A	N/A	8.4	12	$\mu g/m^3$	Buffalo
	24-hour [d]	98th percentile	N/A	N/A	N/A	18.5	35	$\mu g/m^3$	Brookside
	Annual [d]	Mean	N/A	N/A	N/A	8.1	12	$\mu g/m^3$	Terrace
	24-hour [b]	98th percentile	N/A	N/A	N/A	22	35	$\mu g/m^3$	Niagara Falls
	Annual [b]	Mean	N/A	N/A	N/A	8.2	12	$\mu g/m^3$	Niagara Falls
PM_{10}	24-hour [b]	2nd high	42	32	47	N/A	150	$\mu g/m^3$	Niagara Falls

[a] Year 1 = 2013, Year 2 = 2012, Year 3 = 2011
[b] Year 1 = 2012, Year 2 = 2011, Year 3 = 2010
[c] Year 1 = 2010, Year 2 = 2009, Year 3 = 2008
[d] Year 1 = 2014, Year 2 = 2013, Year 3 = 2012
Notes: $\mu g/m^3$ = micrograms per cubic meter; ppm = parts per million; ppb = parts per billion; N/A = data not available
Source: Air quality data were obtained from the NYSDEC air quality monitoring data tables, with exception of the 1-hour SO_2 value, which was obtained from EPA AirData.

The EPA compares ambient air measurements of criteria pollutants to the NAAQS to evaluate the status of air quality in the different regions of the United States. Based on these comparisons, regions are designated as being in attainment, nonattainment, or unclassifiable. A region is designated as attainment if monitoring shows that ambient concentrations of a specific pollutant are less than or equal to the NAAQS. If the NAAQS are exceeded for a pollutant, then the region is designated as nonattainment for that pollutant. An area is designated as unclassifiable if the ambient air monitoring data are incomplete and do not support a designation of attainment or nonattainment. If an area is re-designated from nonattainment to attainment, it is classified as a “maintenance area” for a 10-year period to ensure that the air quality improvements are sustained.

Attainment status for the counties crossed by the Project was obtained from the EPA Green Book Nonattainment Areas for Criteria Pollutants (EPA, 2014d). McKean, Allegany, and Cattaraugus Counties are either in attainment or unclassifiable for all criteria pollutant NAAQS. Erie and Niagara Counties are moderate non-attainment areas for the 8-hour ozone standard and are either in attainment and/or unclassifiable for the remaining criteria pollutant NAAQS. However, New York and Pennsylvania are within the Northeast Ozone Transport Region that establishes emission thresholds for both nitrogen oxides (NO_x) and volatile organic compounds (VOCs) as ozone precursors.

Federal Regulatory Requirements

The CAA, 42 U.S. Code 7401 et seq., as amended in 1977 and 1990, and 40 CFR Parts 50 through 99 provide the federal statutes and regulations governing air pollution in the United States. The following federal requirements have been reviewed for applicability to the Project.

New Source Review – Prevention of Significant Deterioration

Congress established the New Source Review (NSR) pre-construction permitting program as part of the 1977 CAA Amendments. Federal pre-construction review under NSR is conducted under separate procedures for sources in attainment areas and sources in nonattainment areas. Nonattainment New Source Review (NNSR) applies to sources in nonattainment areas. NNSR is discussed in the next section. Prevention of Significant Deterioration (PSD) applies to new major sources or major modifications at existing sources located in attainment areas or in areas that are unclassifiable. PSD is intended to keep new air emission sources from causing the existing air quality to deteriorate beyond acceptable levels. Under PSD, any new major source or major modification of an existing source of air pollutants is required to obtain an air quality permit before beginning construction. The definition of a PSD major source of air pollutants as applicable to the Project is any stationary source which emits, or has the potential to emit, 250 tons per year (tpy) of a regulated criteria pollutant (40 CFR 51.166(b)(1)(i)(b)). Table B.8.a-2 lists the major source emission thresholds applicable to the Project.

TABLE B.8.a-2

Major Stationary Source and Prevention of Significant Deterioration Emission Thresholds

Air Pollutant	Major Stationary Source Threshold (tpy)	PSD Significant Emission Rates (tpy)
NO_X	250	40
CO	250	100
VOC	250	40
PM	250	25
PM_{10}	250	15
$PM_{2.5}$	250	10
SO_2	250	40
GHGs (as CO_2e)	NA	75,000

Once a facility is subject to PSD, the following requirements apply:

- installation of Best Available Control Technology (BACT);
- air quality monitoring and modeling analyses to ensure that a project's incremental increase of emissions will not cause or contribute to a violation of any NAAQS or PSD air quality increment;
- notification to the federal land manager of nearby Class I areas and modeling if applicable;
- a growth, soil, and vegetation; and visibility analyses; and
- public comment on the permit.

BACT is an emissions limitation that is based on the maximum degree of control that can be achieved. It is a case-by-case decision that considers energy, environmental, and economic impact. BACT can be add-on control equipment or modification of the production processes or methods. This includes fuel cleaning or treatment and innovative fuel combustion techniques. BACT may be a design, equipment, work practice, or operational standard if imposition of an emissions standard is infeasible (EPA, 1990).

The air quality monitoring and modeling analysis involves an assessment of existing air quality, which may include ambient monitoring data and air quality dispersion modeling results, and predictions, using dispersion modeling, of ambient concentrations that will result from the proposed project and future growth associated with the Project (EPA, 1990).

Emissions of criteria pollutants from the proposed Pendleton Compressor Station and Wheatfield Dehydration Unit are below the thresholds shown in table B.8.a-2 and would not be subject to PSD review. Additionally, because the Porterville Compressor Station is not presently a major source (as defined by PSD regulations) and modifications to the facility are below the major source thresholds, the proposed modifications would not trigger a PSD review.

<u>New Source Review – Nonattainment New Source Review</u>

NNSR applies to new major sources or major modifications at existing sources located in nonattainment areas. The Project would include aboveground facilities potentially subject to NNSR permitting in Erie and Niagara Counties, both of which are designated as moderate nonattainment areas for the 8-hour ozone standard and are located within the Northeast Ozone Transport Region. Table B.8.a-3 lists the major source emission levels for NNSR for the Project. Note that only the emission levels for NO_X and VOCs are applicable to the project sources, as the only nonattainment air pollutant in the project area is ozone.

TABLE B.8.a-3

Major Stationary Source and Nonattainment New Source Review Emission Thresholds

Air Pollutant	Major Stationary Source Threshold (tpy)	PSD Significant Emission Rates (tpy)
NO_X	100	40
CO	100	100
O_3 (VOC)	50	40
PM	100	25
PM_{10}	100	15
$PM_{2.5}$	100	10
SO_2	100	40

Once a facility is subject to NNSR, the following requirements apply:

- installation of the lowest achievable emission rate;
- the obtaining of emission reduction offsets of the nonattainment pollutant from other sources which impact the same area as the proposed source;
- the source applicant must certify that all other sources owned by the applicant in the State are complying with all applicable CAA requirements;
- sources impacting visibility at nearby Class I areas must notify the federal land manager; and,
- public comment on the permit.

Emissions of VOCs and NO_X (ozone precursor pollutants) from the proposed Pendleton Compressor Station and Wheatfield Dehydration Facility are below the thresholds shown in table B.8.a-3 and would not be subject to NNSR review. Additionally, because the Porterville Compressor Station is not presently a major source (as defined by NSR regulations) and modifications to the facility are below the major source thresholds, the modifications would not trigger an NNSR review.

Federal Class I Areas

Class I areas are designated as pristine natural areas or areas of natural significance (e.g., wilderness areas, national parks, national forests) and receive special protections under the CAA based on good air quality. The EPA has designated 156 mandatory Class I areas, which have the most restrictive PSD requirements. For a new major source or major modification within 62 miles (100 kilometers) of a Class I area, the facility is required to notify the appropriate federal officials and assess the impacts of that project on the nearby Class I area. The nearest Class I Areas to the Project's permanent stationary air emission sources are listed below:

- Lye Brook Wilderness Area: 280 miles east;
- Otter Creek Wilderness Area: 267 miles south;
- Dolly Sods Wilderness Area: 267 miles south; and
- Brigantine Wilderness Area: 311 miles southeast.

The Project is not subject to PSD review; therefore, no analysis of Project air impacts on Class I areas is required. Additionally, the Project is over 250 miles from the nearest Class I areas. Therefore, we conclude that operation of each of these facilities would have negligible impacts on Class I area air quality.

New Source Performance Standards

Section 111 of the CAA authorized the EPA to develop technology-based standards that apply to specific categories of stationary sources. These standards, referred to as New Source Performance Standards (NSPS), are found in 40 CFR 60. The NSPS apply to new, modified, and reconstructed affected facilities in specific source categories. Depending upon the source type, these standards may include emission limits, work practice standards, and requirements for monitoring, recordkeeping, and reporting.

We have determined that the following NSPS would be applicable to one or more of the proposed facilities.

Subpart JJJJ – Standards of Performance for Stationary Spark Ignition Internal Combustion Engines

Subpart JJJJ applies to stationary spark ignition reciprocating internal combustion engines (RICE). The emergency generators proposed to be installed at the Pendleton Compressor Station and the Wheatfield Dehydration Facility, as well as the replacement emergency generator and new compressors at the Porterville Compressor Station would be subject to the NO_x, CO, and VOC requirements of this subpart. The emission standards vary depending on the date of manufacture of the engine, the size of the engine, and whether the engine is an emergency or non-emergency unit. In addition to emission standards, Subpart JJJJ requires performance testing, work practice, monitoring, recordkeeping, and reporting for the engines. The proposed engines would comply with the emission standards, and the additional requirements would be included in the NYSDEC air permits issued for each of the facilities.

Subpart KKKK – Standards of Performance for Stationary Combustion Turbines

Subpart KKKK applies to owners and operators of stationary combustion turbines with a heat input peak load equal to or greater than 10 million metric British Thermal Units (MMBtu/hr) that commenced construction, modification, or reconstruction after February 18, 2005. Subpart KKKK regulates emissions of NO_X and SO_2. Subject turbines must meet the applicable emission limits and operational requirements as well as recordkeeping and reporting requirements of this subpart. The simple-cycle combustion turbines proposed for the Pendleton Compressor Station would be subject to Subpart KKKK.

National Emission Standards for Hazardous Air Pollutants

Section 112 of the CAA authorized the EPA to develop technology-based standards that apply to specific categories of stationary sources that emit hazardous air pollutants (HAPs). These standards are referred to as National Emission Standards for Hazardous Air Pollutants and are found in 40 CFR Parts 61 and 63. Facilities are defined as major sources of HAPs if the facility-wide potential emissions are greater than 10 tpy for a single HAP or greater than 25 tpy for total HAPs. If neither of these thresholds is exceeded then the facilities are considered area sources of HAPs.

Subpart HHH – National Emission Standards for Hazardous Air Pollutants for Stationary Reciprocating Internal Combustion Engines from Natural Gas Transmission and Storage Facilities

Subpart HHH applies to glycol dehydration units and is only applicable to "affected sources" located at Natural Gas Transmission and Storage Facilities that are major sources of HAP emissions. Therefore, these regulations are not applicable to the proposed Wheatfield Dehydration Facility since this facility is a minor, or "area" source of HAPs. No dehydrators are proposed at the Porterville and Pendleton Compressor Stations.

Subpart ZZZZ – National Emission Standards for Hazardous Air Pollutants for Stationary Reciprocating Internal Combustion Engines

Subpart ZZZZ applies to stationary RICE. Any new stationary RICE located at an area source must meet the requirements of NSPS Subpart JJJJ (see previous discussion) to demonstrate compliance with National Emission Standards for Hazardous Air Pollutants Subpart ZZZZ. All of the project facilities would be area sources of HAPs and subject to NSPS JJJJ; therefore, no additional requirements of Subpart ZZZZ apply to the RICE at these facilities.

Title V Permitting

The Part 70 Operating Permit program, as described in 40 CFR 70, requires major stationary sources of air emissions to obtain a federally enforceable operating permit. Part 70 operating permits are more commonly referred to as "Title V" permits. The threshold levels for determining the applicability for a Title V permit are:

- 100 tpy of any criteria air pollutant (except VOC, which has a threshold of 50 tpy);
- 10 tpy of any individual HAP; or
- 25 tpy of any combination of HAPs.

Potential emissions from the proposed Pendleton Compressor Station, Wheatfield Dehydration Facility, and modified Porterville Compressor Station do not exceed the major source thresholds. Thus, Title V Operating permits would not be required for these facilities.

Greenhouse Gas Mandatory Reporting Rule

On October 30, 2009, the EPA published the final Mandatory Reporting of Greenhouse Gases rule, establishing the Greenhouse Gas Reporting Program codified in 40 CFR 98. Since 2011, the Reporting Program has required large direct emitters of GHGs, and certain suppliers (e.g., suppliers of fossil fuels, petroleum products, industrial gases, and CO_2) to report GHG information annually. Subpart W of 40 CFR 98 applies to petroleum and natural gas systems, including both onshore and offshore petroleum and natural gas production; onshore natural gas processing; natural gas transmission compression; underground natural gas storage; and liquefied natural gas storage, import, and export facilities that emit greater than or equal to 25,000 metric tons[11] of GHG, as CO_2e, per year. The EPA's Greenhouse Gas Reporting Program is intended to increase understanding of where GHG emissions are coming from and make informed policy, business, and regulatory decisions (EPA, 2012).

[11] A metric ton is approximately 2,205 pounds, or 1.1 tons.

GHGs occur in the atmosphere both naturally and as a result of human activities, such as the burning of fossil fuels. These gases are the integral components of the atmosphere's greenhouse effect that warms the earth's surface and moderates day/night temperature variation. The most abundant GHGs are water vapor, CO_2, CH_4, N_2O, and ozone. The primary GHGs produced by fossil fuel combustion are CO_2, CH_4, and N_2O. During construction and operation of the Project, these GHGs would be emitted from non-electrical construction equipment and compressors, stationary engines, and other fuel-burning equipment. Emissions of GHGs are typically expressed in terms of CO_2e, where the potential of each gas to increase heating in the atmosphere is expressed as a multiple of the heating potential of CO_2, or its Global Warming Potential (GWP).

Emissions of GHG pollutants associated with the construction and operation of the Project, including all direct and indirect emission sources were calculated. In addition, GHG emissions were converted to total CO_2e emissions based on the GWP of each pollutant. The estimated total GHG emissions from construction of the Project are approximately 2,530 metric tons, and the estimated GHG emissions from operation of the Project are approximately 136,929 metric tpy. The Greenhouse Gas Reporting Program does not apply to construction emissions; however, we have included the construction emissions for accounting and disclosure purposes. The Mandatory Greenhouse Gas Reporting rule requires that GHG emissions be reported at facilities with actual GHG emissions of 25,000 metric tpy or more CO_2e. The proposed Wheatfield Dehydration Facility potential GHG emissions (2,873 metric tpy) do not exceed this threshold; therefore, mandatory GHG reporting would not be required. The potential GHG emissions from modified Porterville Compressor Station (39,042 metric tpy) and the proposed Pendleton Compressor Station (88,603 metric tpy) exceed the reporting threshold. If actual GHG emissions from the Porterville and/or Pendleton Compressor Stations are equal to or greater than 25,000 metric tpy, National Fuel would be required to comply with all applicable requirements of 40 CFR 98.

Greenhouse Gas Tailoring Rule

The GHG Tailoring Rule (75 Federal Register 31514) established provisions for determining whether GHGs are subject to regulation, that, in conjunction with statutory and regulatory mass-based thresholds, were intended to be used in determining major stationary source status (under the PSD and Title V programs) and major modification applicability (under the PSD program) for GHGs. In June 2014, a Supreme Court ruling struck down a portion of the rule that would have allowed the EPA to treat GHGs as an air pollutant for purposes of determining whether a source is a major source required to obtain a PSD or Title V permit. The GHG Tailoring Rule thresholds still apply to facilities that are existing PSD sources or would become PSD sources due to an exceedance of applicable threshold for a criteria pollutant. While the GHG Tailoring Rule does not currently apply to the Project, the EPA has not provided final guidance on how the rule will be implemented as a result of the Supreme Court decision. Therefore, it is possible that the GHG Tailoring Rule thresholds could be applicable at a later time, thus GHG potential emissions are included in the Project emission tables.

General Conformity

A General Conformity applicability analysis is required for any part of a project occurring in non-attainment or maintenance areas for criteria pollutants. Section 176(c) of the CAA requires federal agencies to ensure that federally approved or funded projects conform to the applicable approved State Implementation Plan. Such activities must not:

- cause or contribute to any new violation of any standard in any area;
- increase the frequency or severity of any existing violation of any standard in any area; or
- delay timely attainment of any standard or any required interim emission reductions or other milestones in any area.

As described in section B.8.a, portions of the Project (Erie and Niagara Counties) are in ozone non-attainment areas, and the entire Project is in the Northeast Ozone Transport Region. Because operational air emissions are included in federal or state permit programs, they are exempt. Therefore, the only Project emissions subject to General Conformity would be construction emissions. As discussed in the construction impacts section and shown in table B.8.a-5 below, emission estimates would not exceed General Conformity applicability thresholds; thus, an assessment is not required.

State Regulatory Requirements

A NYSDEC State Facility Permit or Registration application would be required for the modification of the Porterville Compressor Station and for the proposed Pendleton Compressor Station and the Wheatfield Dehydration Facility. Air permit applications were submitted to NYSDEC for the modifications of the Porterville Compressor Station and proposed Pendleton Compressor Station in February 2016 and for the Wheatfield Dehydration Facility in April 2016.

Pursuant to 6 New York Codes, Rules and Regulations 227-1.3(a), stationary combustion installations may not exhibit greater than 20 percent opacity (6-minute average), except for one 6-minute period per hour of not more than 27 percent opacity. Visible emissions are limited to 57 percent at any time. Existing and new combustion units at the facilities would comply with the opacity requirement by firing only natural gas. The proposed combustion units are designed to have inherently low visible emissions; combustion controls would further minimize visible emissions from the compression units.

The NYSDEC has also developed a policy providing guidance for the control of toxic ambient air contaminants, referred to as Policy DAR-1. The policy outlines procedures for evaluating toxic contaminants from air emission sources for which no state or federal ambient air quality standards exist with the objective of protecting the general public from adverse health effects from ambient air contaminants (NYSDEC, 1997). The NYSDEC requested that an air quality analysis for formaldehyde be completed for the proposed modifications to the Porterville Compressor Station and Pendleton Compressor Station under Policy DAR-1. These analyses were provided along with the air permit applications for these two facilities submitted in February 2016 and are summarized below in “Operational Impacts and Mitigation.”

No Pennsylvania state air permitting requirements apply to the Project; however fugitive dust emission control requirements in 25 Pennsylvania Code, Section 123.1 would be applicable. This portion of the Pennsylvania Code requires reasonable control measures to be taken by construction activities that may generate fugitive dust to prevent particulate matter from becoming airborne, including: use of water or chemical dust control; paving of maintenance roadway; and prompt removal of earth or other material from paved streets that has been transported by trucking or earth moving equipment, erosion by water, or other means.

Construction Impacts and Mitigation

Air pollutant emissions during construction of the Project would result from diesel or gasoline exhaust emissions from construction equipment, fugitive dust emissions associated with vehicle and equipment movement on unpaved and paved roads, and fugitive dust emissions from construction activities. Fugitive dust emission levels would vary in relation to moisture content, composition, and volume of soils disturbed. Fugitive dust and other emissions from construction activities generally do not result in a significant increase in regional pollutant levels, although local pollutant levels could increase temporarily.

Criteria pollutant and GHG emissions (primarily nitrogen dioxide, CO, VOCs, PM_{10}, $PM_{2.5}$, and CO_2e, as well as small amounts of SO_2 and HAPs) from construction equipment would result from combustion of gasoline and diesel fuels. Current EPA fuel sulfur standards would also apply, thus minimizing emissions from construction equipment.

The construction emissions estimates, which are provided in table B.8.a-4, assume that construction would occur over a period of 8 months.

TABLE B.8.a-4

Summary of Construction Emissions (Estimated)

							General Conformity *de minimus* threshold (tpy)	
	PM_{10} [a]	$PM_{2.5}$ [a]	NO_X	CO	VOC [b]	GHG (CO_2e) [c]	NO_X	VOC
Total Project Construction Emissions	8.8	2.7	56.1	11.6	4.0	2,530	100	50

[a] Estimate of PM_{10} = Particulate Matter, exhaust + Fugitive Dust PM_{10}; Estimate of $PM_{2.5}$ = Particulate Matter, exhaust + Fugitive Dust $PM_{2.5}$

[b] VOC emissions are approximately equal to hydrocarbon emissions.

[c] Total CO_2e values determined by multiplying total emissions by GWP and converting to metric tons.

Because construction emissions are short term and temporary, standard EPA emission thresholds do not apply. As referenced in section B.8.a, areas considered in non-attainment or maintenance for any of the NAAQS are required to assess construction emissions against General Conformity *de minimis* thresholds to determine if a General Conformity analysis is required. Based upon the emission estimates provided in table B.8.a-4, the total construction emissions for the Project would be less than General Conformity *de minimis* thresholds; therefore, a conformity analysis is not required.

National Fuel would comply with the control of fugitive dust emissions according to 6 New York Codes, Rules and Regulations 201 and 25 Pennsylvania Code, Section 123.1. Fugitive dust emissions may be generated from excavation and vehicle traffic on unpaved or disturbed access and construction land surfaces.

National Fuel has developed a fugitive dust control plan that specifies fugitive dust mitigation measures that would be employed on an as-needed basis to control fugitive dust emissions. Such measures may include water application, vehicle speed restrictions, use of gravel or asphalt at site exit points to remove dirt from tires and tracks, and replanting disturbed areas as quickly as possible after construction. Additionally, the Project EI would have the authority to determine if/when dust control measures are necessary and to stop work if the contractor does not comply with dust control measures. Emissions from exhaust systems of construction equipment would be mitigated by shutting down equipment and vehicles when not required and conducting regular preventative maintenance. We have reviewed National Fuel's fugitive dust control plan and found it to be acceptable.

Emissions would occur over the duration of construction activity and would vary along the length of the Project. As stated, impacts from construction equipment would be temporary and would not result in a significant impact on regional air quality or result in a violation of any applicable ambient air quality standard.

Operation Impacts and Mitigation

Estimated emissions from the operation of the modified Porterville Compressor Station, the proposed Pendleton Compressor station, the proposed Wheatfield Dehydration Facility, and pipeline facilities are summarized below.

Porterville Compressor Station

National Fuel is modifying the existing Porterville Compressor Station by replacing four existing 150 hp storage compressor engines with one 400 hp compressor engine. Although this replacement is not associated with the Northern Access 2016 Project, we have included information regarding the emission changes in this assessment so as to accurately present emissions associated with operation of the compressor station. Ongoing modifications to the compressors at the existing Porterville Compressor Station are expected to reduce the NO_x emissions from the facility. In addition, the following new equipment would be installed as part of the proposed project:

- two 2,675 hp compressor engines;
- one emergency generator; and
- three storage tanks.

The emissions from the current facilities, separate replacement project, and proposed modifications at the Porterville Compressor Station are summarized in table B.8.a-5.

TABLE B.8.a-5

Summary of Potential-to-Emit Emissions for the Modified Porterville Compressor Station

Emission Sources	Potential Emission (tpy)								
	NO_X	CO	VOC	PM_{10} and $PM_{2.5}$	SO_2	HAPs	Formal-dehyde	Benzene	GHG (CO_{2e})
Existing emission sources to remain	4.3	3.6	6.8	0.3	0.02	0.3	<0.1	<0.1	18,928
Replacement compressor [a]	1.0	1.2	0.8	0.3	0.01	0.2	<0.1	<0.1	1,628
Proposed new emission sources	26.5	1.9	0.9	1.6	0.1	0.8	0.2	<0.1	22,480
Total	**31.8**	**6.7**	**8.5**	**2.2**	**0.1**	**1.3**	**0.3**	**<0.1**	**43,036**
Major Source Thresholds (Title V)	**100**	**100**	**50**	**100**	**100**	**25**	**10**	**10**	**N/A**

[a] Although this replacement project is not associated with the Northern Access 2016 Project, we have included information regarding these proposed emission changes along with this assessment.

Pendleton Compressor Station

The proposed Pendleton Compressor Station would have the following air emission sources:

- two 11,626 hp compressor engines; and
- one 1,053 hp emergency generator.

The potential emissions from operation of the Pendleton Compressor Station are summarized in table B.8.a-6.

TABLE B.8.a-6

Summary of Potential-to-Emit Emissions for the Pendleton Compressor Station and Wheatfield Dehydration Facility

Facility	Potential Emission (tpy)								
	NO_X	CO	VOC	PM_{10} and $PM_{2.5}$	SO_2	HAPs	Formal-dehyde	Benzene	GHG (CO_{2e})
Pendleton Compressor Station	45.0	4.3	3.1	5.4	0.4	0.2	<0.1	<0.1	97,668
Wheatfield Dehydration Facility	3.5	2.9	0.9	0.3	<0.1	0.1	<0.1	<0.1	4,426
Major Source Thresholds (Title V)	**100**	**100**	**50**	**100**	**100**	**25**	**10**	**10**	**N/A**

Wheatfield Dehydration Facility

The proposed Wheatfield Dehydration Facility would have the following air emission sources:

- two glycol dehydration units, each with a 1.5 MMBtu/hr reboiler burner;
- one natural-gas fired 5.0 MMBtu/hr thermal oxidizer for emission control;
- one emergency generator; and
- one storage tank.

The emissions from the proposed Wheatfield Dehydration Facility are summarized in table B.8.a-6.

Pipeline Facilities

Twenty-three MLVs with pneumatic (natural gas) actuators would be installed along the mainline Pipeline and at meter and regulator stations on the pipeline. The potential emissions from these actuators are calculated by conservatively assuming a continuous bleed rate of 6 standard cubic feet per hour per component. Potential fugitive emissions from the pipeline pneumatic actuators are summarized in table B.8.a-8.

Two emergency generators would also be installed at pipeline facilities: one at the TGP-200 Interconnect and one at the X-North Pressure Reduction Station. Additionally, a 1,000-gallon condensate storage tank would be installed at the TGP 200 Interconnect. Potential emissions from the emergency generators and storage tank are also summarized in table B.8.a-7.

TABLE B.8.a-7

Summary of Potential-to-Emit Emissions for the Proposed Pipeline Equipment

	Potential Emission (tpy)								
Emission Sources	NO_X	CO	VOC	PM_{10} and $PM_{2.5}$	SO_2	Total HAPs	Formal-dehyde	Benzene	GHG (CO_{2e})
Emergency generators	0.3	7.2	0.3	<0.1	<0.1	<0.1	<0.1	<0.1	29
Condensate storage tank	-	-	0.7	-	-	<0.1	-	<0.1	5
Mainline valves	-	-	0.2	-	-	<0.1	-	<0.1	613
Mainline pipeline leaks/venting	-	-	0.5	-	-	<0.1	-	<0.1	1,652
Replacement pipeline leaks/venting	-	-	<0.1	-	-	<0.1	-	<0.1	66
M&R Station Isolation	-	-	<0.1	-	-	<0.1	-	<0.1	31
Pipeline Blowdown	-	-	1.4	-	-	<0.1	-	<0.1	4,701
Total	**0.3**	**7.2**	**3.1**	**<0.1**	**<0.1**	**<0.1**	**<0.1**	**<0.1**	**7,097**

Fugitive releases at aboveground facilities were included in tables B.8.a-5 and B.8.a-6. Non combustion-related emissions would also occur from the pipeline and associated valves, meter and regulation stations, and pig launchers and receiver during normal operation. These emissions would include fugitive methane releases from leaks and piping components. Table B.8.a-8 provides an annual estimate of these emission sources.

TABLE B.8.a-8

Operational Fugitive Methane Emissions

	Potential Emission (tpy)		
Pollutant	Fugitives & Non-Routine (M&R Stations)	Fugitives & Non-Routine (Pipeline)	Total
CH4	1.3	256.7	258
CO_2e	31	6,419	6,450

We received a number of comments concerning the release of benzene, toluene, formaldehyde, and other air toxics to the atmosphere as a result of the Project and associated facilities. HAPs are primarily a result of natural gas-fired combustion equipment utilized at the facilities. The major source thresholds for total HAP emissions and single maximum HAP are 25 tpy and 10 tpy, respectively. Potential HAP emissions for the specific individual HAPs of concern and those emitted in the largest quantities and total HAPs are summarized in table B.8.a-9. Each facility's potential HAP emissions are below the CAA major source thresholds.

TABLE B.8.a-9

Summary of Potential-to-Emit Emissions for Hazardous Air Pollutants

	Potential Emission (tpy)					
Facility	Acetaldehyde	Benzene	Formaldehyde	Toluene	Xylene	Total HAPs
Porterville Compressor Station	0.1	<0. 1	0.3	<0.1	<0.1	1.3
Pendleton Compressor Station	<0.1	<0.1	<0.1	<0.1	<0.1	0.2
Wheatfield Dehydration Facility	N/A	<0.1	<0.1	<0.1	<0.1	0.1

N/A = not applicable.

As part of the air permitting process for the modified Porterville Compressor Station and proposed Pendleton Compressor Station, National Fuel performed an air dispersion modeling analysis using the latest version of the EPA's AERMOD or AERSCREEN atmospheric dispersion model (as applicable) to evaluate compliance with the NAAQS. Table B.8.a-10 provides the total predicted maximum ground-level concentrations outside of each facility's boundary for each modeled pollutant. The modeling analysis for the modified Porterville Compressor Station includes the existing emission source at this station. As shown in this table, the modeled concentrations meet the NAAQS for all pollutants when combined with existing ambient background concentrations. These results demonstrate that the operation of the modified Porterville Compressor Station and proposed Pendleton Compressor Station, when added to existing ambient air quality concentrations, would not result in a violation of any of the NAAQS.

Additionally, the NYSDEC requested formaldehyde modeling for the modified Porterville Compressor Station and proposed Pendleton Compressor Station to evaluate compliance with short-term and annual formaldehyde guidance concentrations, which are part of the NYSDEC's air toxics control program. Formaldehyde is the largest single HAP at these two facilities. Table B.8.a-11 provides the total predicted maximum ground-level concentrations outside of each facility's boundary for formaldehyde. As shown in this table, the modeled concentrations are below short-term and annual formaldehyde guidance concentrations. These results demonstrate that the operation of the modified Porterville Compressor Station and proposed Pendleton Compressor Station would not result in adverse effects from toxic air contaminants.

TABLE B.8.a-10

Results of NAAQS Dispersion Modeling

Facility / Pollutant / Averaging Time		Modeled Impact ($\mu g/m^3$)	Background Monitored Design Value ($\mu g/m^3$)	Total (Impact + Background) ($\mu g/m^3$)	NAAQS ($\mu g/m^3$)	Exceeds NAAQS?
Porterville Compressor Station [a]						
NO_2	Annual	9.1	18.6	27.7	99.6	No
NO_2	1-hour	45.6	91.7	137.3	188.0	No
$PM_{2.5}$	Annual	0.6	8.4	9.0	12.0	No
$PM_{2.5}$	24-hour	2.3	19.7	22.0	35.0	No
Pendleton Compressor Station [b]						
NO_2	Annual	9.4	18.6	28.0	99.6	No
NO_2	1-hour	81.8	91.7	173.6	188.0	No
PM_{10}	24-hour	7.4	40.3	47.7	150.0	No
$PM_{2.5}$	Annual	1.3	8.1	9.4	12.0	No
$PM_{2.5}$	24-hour	7.4	18.5	25.9	35.0	No

[a] SO_2 and CO are below their respective significant impact levels (SIL) and considered insignificant for NAAQS standards.
[b] PM10, SO_2, and CO are below their respective SILs and considered insignificant for NAAQS standards.

TABLE B.8.a-11

Results of NYSDEC Air Toxics Dispersion Modeling

Facility / Pollutant / Averaging Time		Modeled Impact ($\mu g/m^3$)	DAR-1 Standard ($\mu g/m^3$) [a]	Exceeds DAR-1 Standard?
Porterville Compressor Station				
Formaldehyde	1-hour	3.64	30	No
Formaldehyde	Annual	0.055	0.06	No
Pendleton Compressor Station				
Formaldehyde	1-hour	3.32	30	No
Formaldehyde	Annual	0.029	0.06	No

[a] DAR-1 standard obtained from Policy DAR-1: Guidelines for the Control of Toxic Ambient Air Contaminants (NYSDEC, 2014).

Because the operation of the Wheatfield Dehydration Facility would result in minor emissions, the NYSDEC did not request that a modeling analysis be completed for this facility. Based on the proposed operational emissions for this facility, we conclude that it is unlikely to result in significant emission impacts on local air quality.

Thus, through a review of the estimated emissions from construction and operation and an analysis of the modeled air quality impacts from operation of the modified Porterville Compressor Station and proposed Pendleton Compressor Station, we find that the Project would not result in regionally significant impacts on air quality. The Project would result in continued

compliance with the NAAQS, which are protective of human health, including children, the elderly, and other sensitive populations. The project operational emissions would also be below New York State air toxic concentrations.

b. Noise and Vibration

Construction and operation of the proposed Project would affect the local noise environment. Two measurements used by federal agencies to relate the time-varying quality of environmental noise to its known effects on people are the equivalent sound level (L_{eq}) and the day-night sound level (L_{dn}). The L_{eq} is an A-weighted sound level containing the same sound energy as instantaneous sound levels measured over a specific time period. Noise levels are perceived differently, depending on length of exposure and time of day. The L_{dn} takes into account the duration and time the noise is encountered. An additional 10 decibels (dB) are added to late night through early morning (10:00 p.m. to 7:00 a.m.) noise exposures to account for people's greater sensitivity to sound during nighttime hours. An L_{dn} of 55 dB on the A-weighted scale (dBA) is equivalent to a continuous L_{eq} noise level of 48.6 dBA.

The noticeable noise increase threshold for humans is about 3 dBA. A 5 dBA increase is clearly audible for humans, while an increase of 10 dBA is perceived to be a doubling of noise levels.

Regulatory Requirements

In 1974, EPA published its *Information on Levels of Environmental Noise Requisite to Protect Public Health and Welfare with an Adequate Margin of Safety* providing information for state and local regulators to use when developing their own ambient noise standards. The EPA has determined that an L_{dn} of 55 dBA protects the public from indoor and outdoor activity noise interference. An L_{dn} of 55 dBA is equivalent to a continuous noise level of 48.6 dBA. For comparison, normal speech at a distance of three feet averages 60 to 70 dBA L_{eq}. FERC has adopted the EPA's determination and requires that a new compressor station not exceed an L_{dn} of 55 dBA at noise-sensitive areas (NSAs)[12]. In addition to noise requirements, FERC requires that operation of a compressor station not result in any perceptible increase in vibration.

New York does not regulate noise at the state level. Of the counties and local municipalities to be traversed by the Project, only the Town of Wheatfield in Niagara County has existing regulations or ordinances that govern noise pollution from construction or industrial activities. Wheatfield noise regulations specify that maximum permissible transient sound levels from any operation, activity, or source should not exceed 85 dBA for a duration of greater than 12 seconds during daytime and 85 dBA for a duration of greater than 6 seconds during nighttime. Furthermore, steady noise is limited to less than 65 dBA during daytime and 50 dBA during nighttime. The FERC's criterion of 55 dBA L_{dn} is more restrictive than the Wheatfield noise standard.

[12] Noise sensitive areas, according to 18 CFR 380.12(k)(2), include areas such as residences, schools, hospitals, and other areas covered by relevant state or local noise ordinances.

Construction Noise Impacts and Mitigation

Construction activities associated with the Project would be performed with standard heavy equipment such as track-excavators, backhoes, bulldozers, dump trucks, and cement trucks. The most prevalent sound source during construction would be internal combustion engines used to power the construction equipment. Construction activities would temporarily increase ambient sound levels in the immediate vicinity of aboveground facility construction sites, while noise associated with pipeline construction for the Project would be transitory in nature. Most construction activities would be limited to daytime hours, with the exception of the HDDs (discussed further, below) and the running of water pumps during hydrostatic testing, which would occur continuously until hydrostatic testing is complete.

Blasting may be needed due to the presence of consolidated bedrock along the proposed route, which would generate additional temporary noise impacts during blasting activities. The need for blasting would be determined by the construction contractors on a site-specific basis at the time of construction. If blasting becomes necessary, National Fuel has submitted an acceptable project-specific blasting plan that establishes procedures and safety measures that National Fuel's contractor would be required to follow while implementing blasting activities. In addition, National Fuel would follow the measures listed in section B.1.a, including using blasting mats and notifying nearby landowners prior to blasting activities. Because blasting, if necessary, would occur during daylight hours, the noise impacts would be temporary and would not result in significant impact to nearby NSAs.

National Fuel completed a construction noise analysis for aboveground facilities where noise generating would be located for longer periods of time. Table B.8.b-1 provides an estimate of daytime noise levels from construction activities at the nearest noise sensitive area (NSA) to each aboveground facility.

TABLE B.8.b-1

Construction Noise Analysis

FACILITY/NSA	Distance to NSA	Direction to NSA	Estimated Construction Noise Level L_{eq} (dBA) [a]
X-N Pressure Reduction Station			
NSA (residence) [b]	400 feet	Southeast	65
Porterville Compressor Station			
NSA (residence) [c]	525 feet	North-northeast	66
TGP 200 Interconnect Station			
NSA (park)	750 feet	East	55
Pendleton Compressor Station			
NSA (residences)	1,400 feet	Southeast	58
Wheatfield Dehydration Facility			
NSA (residences)	2,450 feet	North	48
Hinsdale Meter Station			
NSA (residences)	550 feet	Northwest	62

[a] Estimate based on aggregate sound level of peak construction equipment at each facility.
[b] Nearest NSA to the proposed X-N Pressure Reduction Station.
[c] Nearest NSA to the existing Porterville Compressor Station.

Based on the noise estimates provided in table B.8.b-2, we conclude that construction noise would have a minor impact on daytime noise levels and would not result in a significant noise impact at the nearby NSAs.

An exception to the typical daytime construction time period would be certain HDD activities, which would continue into nighttime hours and would operate 24 hours per day for several days. Because of the nighttime activity and the fact that the equipment used for the HDDs would be stationary for an extended period of time, there is a greater potential for a prolonged noise impact. National Fuel currently proposes to construct three HDD crossings along the pipeline route.

Table B.8.b-2 summarizes the NSAs within 0.5 mile of the HDD entry points and identifies any vegetation or other potential noise buffers present between the NSAs and the HDD sites. National Fuel performed an ambient noise survey of the HDD entry locations to calculate the HDD noise impact on the nearest NSAs. Table B.8.b-3 summarizes the acoustical analysis based on typical construction equipment considered to be noise sources associated with HDD entry operations.

TABLE B.8.b-2

Summary of the Closest NSAs to the HDD Entry and Exit Points

HDD Name	Approximate Milepost	Entry or Exit Point	Closest NSA	Distance (feet) and Direction of NSA	Potential Noise Buffers between NSA and HDD Site
Allegheny River	18.1	Entry	Residences	1,775 northeast	Limited foliage and trees
	17.8	Exit	No NSAs identified within 0.5 mile	N/A	N/A
I-86	43.1	Entry	Residences	700 southeast	None
	43.4	Exit	Residences	475 north-northeast	Some shielding by terrain and foliage
Highway 16	89.5	Entry	Residence	300 northeast	Clear line of sight
	89.0	Exit	Residences	950 northwest	Significant foliage

TABLE B.8.b-3

HDD Noise Analysis at the Closest NSA

HDD Name	Entry or Exit Point [a]	Ambient L_{dn} (dBA) [b]	Estimated L_{dn} of the HDD (dBA)	Total Sound Level HDD L_{dn} + Ambient L_{dn} (dBA)	Potential Increase in Ambient Noise Level (dB)	Noise Criteria Exceeded
Allegheny River	Entry	48.7	54.0	55.1	6.4	No
I-86	Entry	57.1	65.2	65.8	8.7	Yes
Highway 16	Entry	52.0	73.5	73.5	21.5	Yes

[a] Noise special to HDD construction, including specialized equipment and 24-hour operation, is concentrated at the entry point and analysis focuses on those locations.

[b] All ambient concentrations and noise estimates are listed for the nearest NSA to the associated HDD entry location as identified in table B.8.b-2.

The results of the acoustical analysis suggest that the noise of the HDD operations at the nearest NSAs to some HDD entry sites could exceed FERC's noise criterion of 55 dBA L_{dn} at nearby NSAs if additional noise mitigation measures are not implemented. Accordingly, National Fuel has proposed to implement one or more of the following noise mitigation measures to minimize impacts on nearby NSAs:

- employing a temporary noise barrier around the workspace associated with the HDD entry site; this barrier could be constructed of 0.5-inch thick plywood panels, extending 12-16 feet high; or equal sound barrier system, installed around two or three sides of the HDD workspace;
- as an alternative to a workspace barrier, mud tanks, equipment trailers, etc. could be strategically arranged with an additional barrier system as required;
- employing hospital-grade exhaust silencers on all engines in conjunction with any of the site HDD equipment (e.g., generators, pumps, and hydraulic power unit);
- employing a partial noise barrier or enclosure around the hydraulic power unit and engine-driven pumps (e.g., cover sides and roof of equipment with an acoustically lined plywood barrier system);
- employing a partial noise barrier around any engine jacket-water coolers;
- installing a partial barrier or partial enclosure around the mud mixing/cleaning system;
- relocating specific equipment (e.g., remotely relocate mud rig);
- employing "low-noise" generators (i.e., designed with a factory acoustical enclosure);
- conducting periodic monitoring of noise levels to determine the effectiveness of noise control measures while HDD operations are underway, and installing additional noise mitigation as necessary; and
- if necessary, providing temporary housing or equivalent monetary compensation to nearby landowner.

Additionally, National Fuel commits to employing the HDD noise mitigation measures recommended in the acoustical assessment report for the Project.[13] Anticipated site-specific HDD noise mitigation measures and post-mitigation estimated noise levels at the nearest NSAs are summarized in table B.8.b-4.

[13] The acoustic assessment report for the Project can be viewed on the FERC Internet website at http://www.ferc.gov as part of National Fuel's Environmental Report filed on May 29, 2015. Using the "eLibrary" link, select "Advanced Search" from the eLibrary menu and enter 20150529-5352 in the "Accession Number" field. The figures are also available for public inspection at the FERC's Public Reference Room in Washington, DC (call (202) 502-8317 for instructions).

TABLE B.8.b-4

Site-Specific HDD Noise Mitigation Measures for the Northern Access 2016 Project

HDD Name	Entry or Exit Point	Specific Noise Mitigation Measures	Estimated L_{dn} of the HDD at Closest NSA with Mitigation (dBA)	Total Sound Level HDD with Mitigation L_{dn} + Ambient L_{dn} (dBA)	Potential Increase in Ambient Noise Level (dB)
I-86	Entry	12 to 16 foot high barrier southeast of the entry side equipment; exhaust silencers on engines	53.7	58.7	1.6
Highway 16	Entry	12 to 16 foot high barrier northeast to southeast of the entry side equipment; exhaust silencers on engines	59.5	60.2	8.2

The acoustical assessment indicates that the noise of HDD operations at the Highway 16 HDD entry site would exceed the 55 dBA L_{dn} sound level criterion, for 24-hour operations, at the closest NSAs even if the identified additional noise mitigation measure (i.e., a temporary noise barrier) is employed. It is possible that one or more of the other measures listed above that National Fuel has already agreed to implement, in conjunction with the site-specific measure identified in table B.8.b-4 may reduce noise to below our 55 dBA L_{dn} criterion; however, National Fuel did not provide an acoustical analysis to support this assumption. To ensure compliance with the FERC's noise standard and to provide adequate protection from noise impact, **we recommend that:**

- **<u>Prior to construction of the Highway 16 HDD</u>, National Fuel should file with the Secretary, for the review and written approval by the Director of OEP, an HDD noise mitigation plan to reduce the projected noise level attributable to the drilling operations at the Highway 16 HDD entry location. During operation of the HDD, National Fuel should implement the approved plan, monitor noise levels, include the noise level results in its bi-weekly status reports, and make all reasonable efforts to restrict the noise attributable to the drilling operations to no more than an L_{dn} of 55 dBA at the closest NSAs to the HDD entry points.**

Operational Noise Impacts and Mitigation

Noise from operation of the Project would be produced primarily through operation of each of the compressor stations and other aboveground facilities including the pressure reduction station, the interconnect station, the dehydration facility, the meter station, and MLVs. A summary of operational noise sources, nearby NSAs in the vicinity of each facility, noise impacts, and proposed mitigation measures is detailed below.

<u>Porterville Compressor Station</u>

The existing Porterville Compressor Station is located in the Town of Elma in Erie County, approximately 2.5 miles northeast of East Aurora, New York. The area surrounding the compressor station is level to sloping terrain and consists of wooded lands, some agricultural lands, and rural residences. The nearest NSAs are summarized in table B.8.b-5.

The compressor station equipment currently consists of four 150 hp compressor engines associated with an existing gas storage field and not associated with a transmission pipeline. The four existing compressor units are installed in a single compressor building and ancillary

equipment includes engine exhaust systems, engine coolers, engine air intake systems, a station gas cooler and associated high pressure gas piping, and additional equipment associated with gas delivery. As part of a separate project, National Fuel plans to retire and remove the existing four 150 hp gas storage field injection compressor engines and replace them with a single new 400 hp compressor unit. This separate storage compressor replacement project is not proposed as part of the Northern Access 2016 Project facilities, and it is possible that this compressor replacement project may take place either prior to, or concurrent with, the construction related to the Project.

The proposed additions to the compressor station associated with the Project include two new compressor units which are proposed to be installed where the existing four 150 hp storage field injection compressor units are currently located. Other ancillary equipment proposed associated with the Project includes acoustical enclosures for the engine-compressor units, engine exhaust silencers, engine air inlet systems, gas coolers, and aboveground and buried gas piping.

National Fuel completed an acoustical analysis that included a noise survey to evaluate existing background noise levels and to estimate noise associated with the proposed modifications to the compressor station, including the removal of the existing gas storage injection compressor units, planned replacement gas storage injection compressor unit, new compressor unions, and other auxiliary equipment. The results of the noise survey and acoustical analysis are presented in table B.8.b-5.

TABLE B.8.b-5

Porterville Compressor Station Noise Analysis

Facility/ NSA	Distance to NSA	Direction to NSA	Current L_{dn} of the Station at the NSA (dBA)	Estimated Future L_{dn} of the Station at the NSA (dBA) [a]	Potential Increase in Existing Noise Level (dB)
Porterville Compressor Station					
NSA no. 1 (residence)	700 feet	Northwest	50.0	49.9	-0.1
NSA no.2 (residences)	525 feet	North-northeast	52.9	51.8	-1.1
NSA no.3 (residences)	600 feet	East-northeast	55.7	51.3	-4.4
NSA no. 4 (residences)	950 feet	Northwest	49.7	47.1	-2.6
NSA no. 5 (residences)	1,200 feet	Southwest to southeast	50.9	49.7	-1.2

[a] Estimate based upon removal and replacement of existing compressor units and addition of new compressor units.

As presented in table B.8.b-5, the impacts of the compressor station operation on the nearest NSAs would be below FERC's 55 dBA L_{dn} criterion. Additionally, due to the changes at the station associated with the proposed project as well as the other station changes, future noise levels from the station operating at full load at nearby NSAs would likely be lower than currently realized.

X-N Pressure Reduction Station

The proposed X-N Pressure Reduction Station site is in the Town of Marilla in Erie County, approximately 1 mile east of the existing Porterville Compressor Station. The area surrounding the proposed reduction station consists of level to sloping wooded lands, agricultural lands, and rural residences. The nearest NSA is summarized in table B.8.b-6.

The proposed equipment associated with the regulation station include a meter skid and acoustical enclosure, a flow control skid and acoustical enclosure, a pressure regulation skid and acoustical enclosure, aboveground piping, an emergency generator, and other ancillary equipment.

National Fuel completed an acoustical analysis that included a noise survey to evaluate existing background noise levels and to estimate noise associated with operation of the proposed pressure reduction station. The results of the noise survey and acoustical analysis are presented in table B.8.b-6.

TABLE B.8.b-6

X-N Pressure Reduction Station Noise Analysis

Facility/ NSA	Distance to NSA	Direction to NSA	Ambient or Existing L_{dn} (dBA)	Estimated L_{dn} of the Station at the NSA (dBA)	Total Sound Level at the NSA Station L_{dn} + Ambient L_{dn} (dBA)	Potential Increase in Ambient or Existing Noise Level (dB)
X-N Pressure Reduction Station						
NSA no. 1 (residence)	400 feet	Southeast	43.3	43.8	43.9	0.6

As presented in table B.8.b-6, the impacts of the operation of the X-N Pressure Reduction Station on the nearest NSA would be below FERC's 55 dBA L_{dn} criterion and would result in noise impacts at the nearest NSA that would likely be imperceptible.

TGP 200 Interconnect Station

The TGP 200 Interconnect Station would be located in the Town of Wales in Erie County, approximately 2.5 miles southeast of the Village of East Aurora. The proposed interconnect station site is 550 feet east of an existing Kinder Morgan meter station and 1,800 feet east-northeast of the existing National Fuel East Aurora Compressor Station. The interconnect station would be located in a mix of forested lands, agricultural lands, and rural residences. The nearest NSAs are summarized in table B.8.b-7.

The interconnect station equipment would consist of backpressure regulator, flow control, and meter skids in acoustical enclosures; an emergency generator; aboveground piping; and additional ancillary equipment.

National Fuel completed an acoustical analysis that included a noise survey to evaluate existing background noise levels and to estimate noise associated with operation of the interconnect station. The results of the noise survey and acoustical analysis are presented in table B.8.b-7.

As presented in table B.8.b-7, the impacts of the operation of the TGP 200 Interconnect Station on the nearest NSAs would be below FERC's 55 dBA L_{dn} criterion and would result in noise impacts at the nearest NSAs that would likely be imperceptible.

TABLE B.8.b-7

TGP 200 Interconnect Station Noise Analysis

Facility/ NSA	Distance to NSA	Direction to NSA	Ambient or Existing L_{dn} (dBA)	Estimated L_{dn} of the Station at the NSA (dBA)	Total Sound Level at the NSA Station L_{dn} + Ambient L_{dn} (dBA)	Potential Increase in Ambient or Existing Noise Level (dB)
TGP 200 Interconnect Station						
NSA no.1 (residences)	2,600 feet	West	39.5	20.5	39.6	0.1
NSA no.2 (residences)	2,900 feet	West-southwest	40.6	19.4	40.6	0.0
NSA no.3 (residences)	2,450 feet	Southwest	41.2	21.2	41.2	0.0
NSA no.4 (park)	750 feet	East	38.9	35.1	40.4	1.5

Pendleton Compressor Station

The proposed Pendleton Compressor Station site is in the Town of Pendleton in Niagara County. The compressor station would be located in a mix of agricultural lands, wooded lands, and residences. The nearest NSAs are summarized in table B.8.b-8.

TABLE B.8.b-8

Pendleton Compressor Station Noise Analysis

Facility/ NSA	Distance to NSA	Direction to NSA	Ambient or Existing L_{dn} (dBA)	Estimated L_{dn} of the Station at the NSA (dBA)	Total Sound Level at the NSA Station L_{dn} + Ambient L_{dn} (dBA)	Potential Increase in Ambient or Existing Noise Level (dB)
Pendleton Compressor Station						
NSA no.1 (residences)	1,650 feet	Southwest to Northwest	34.8	35.9	38.4	3.6
NSA no. 2 (residences)	1,550 feet	Southeast	38.7	36.5	40.8	2.1
NSA no. 3 (residences)	2,050 feet	Northwest	34.0	33.8	36.9	2.9
NSA no. 4 (residences)	1,850 feet	Southwest	34.8	34.8	37.8	3.0

The compressor station equipment would consist of acoustically designed compressor buildings, turbine air inlet and exhaust systems, low noise turbine lube oil coolers and gas coolers, aboveground gas piping, an emergency generation, and additional ancillary equipment.

National Fuel completed an acoustical analysis that included a noise survey to evaluate existing background noise levels and to estimate noise associated with operation of the proposed compressor station. The results of the noise survey and acoustical analysis are presented in table B.8.b-8.

The compressor station noise levels are likely to be perceptible at the majority of the nearby NSAs; however, as presented in table B.8.b-8, the impacts of the operation of the proposed Pendleton Compressor Station on the nearest NSAs would be below FERC's 55 dBA L_{dn} criterion.

Wheatfield Dehydration Facility

The Wheatfield Dehydration Facility would be located in the Town of Wheatfield in Niagara County. The dehydration station would be located in primarily industrial land. The nearest NSAs are summarized in table B.8.b-9.

The dehydration station equipment would consist of two dehydration trains, two regeneration skids, aboveground gas piping, an emergency generator, and additional ancillary equipment.

National Fuel completed an acoustical analysis that included a noise survey to evaluate existing background noise levels and to estimate noise associated with operation of the proposed dehydration station. The results of the noise survey and acoustical analysis are presented in table B.8.b-9.

TABLE B.8.b-9

Wheatfield Dehydration Facility Noise Analysis

Facility/ NSA	Distance to NSA	Direction to NSA	Ambient or Existing L_{dn} (dBA)	Estimated L_{dn} of the Station at the NSA (dBA)	Total Sound Level at the NSA Station L_{dn} + Ambient L_{dn} (dBA)	Potential Increase in Ambient or Existing Noise Level (dB)
Wheatfield Dehydration Station						
NSA no. 1 (residences)	3,000 feet	South-southwest	57.2	37.1	57.2	0.0
NSA no. 2 (residences)	3,350 feet	South	52.8	35.6	52.9	0.1
NSA no. 3 (residences)	2,450 feet	North	51.0 [a]	39.6	51.3	0.3
NSA no. 4 (residences)	3,000 feet	Northeast	51.0 [a]	37.1	51.2	0.2

[a] Existing ambient noise levels for NSAs 3 and 4 were estimated based on published noise data.

As presented in table B.8.b-9, the impacts of the operation of the proposed Wheatfield Dehydration Facility on the nearest NSAs would be below FERC's 55 dBA L_{dn} criterion and would result in noise impacts at the nearest NSAs that would likely be imperceptible.

Hinsdale Meter Station

The proposed Hinsdale Meter Station site is in the Town of Hinsdale in Cattaraugus County, adjacent to Interstate 86. The meter station would be constructed in a rural residential area and would be adjacent to the National Fuel Hinsdale Compressor Station, currently under construction. The nearest NSAs are summarized in table B.8.b-10.

The meter station equipment would consist of a flow control and meter skid, a pressure regulation skid, aboveground piping, and additional ancillary equipment.

National Fuel completed an acoustical analysis that included a noise survey to evaluate existing background noise levels and to estimate noise associated with operation of the proposed meter station. The results of the noise survey and acoustical analysis are presented in table B.8.b-10.

The compressor station noise levels are likely to be perceptible at NSA 1, but are unlikely to be perceptible at the other nearby NSAs. As presented in table B.8.b-10, the impacts of the operation of the proposed Hinsdale Meter Station on the nearest NSAs would be below FERC's 55 dBA L_{dn} criterion.

In addition to noise requirements, the Commission requires that operation of compressor stations not result in any perceptible increase in vibration. Based on the acoustical analyses prepared for the proposed facilities, National Fuel does not anticipate that any of the facilities would result in a perceptible increase in vibration at nearby NSAs. If the new facility equipment results in perceptible vibration, the Commission would require National Fuel to investigate the cause and could require mitigation to reduce the vibration.

TABLE B.8.b-10

Hinsdale Meter Station Noise Analysis

Facility/ NSA	Distance to NSA	Direction to NSA	Ambient or Existing L_{dn} (dBA) [a]	Estimated L_{dn} of the Station at the NSA (dBA)	Total Sound Level at the NSA Station L_{dn} + Ambient L_{dn} (dBA)	Potential Increase in Ambient or Existing Noise Level (dB)
Hinsdale Meter Station						
NSA no. 1 (residences)	550 feet	Northwest	46.3	45.4	48.9	2.6
NSA no. 2 (residences)	1,800 feet	Southwest	46.1	32.2	46.3	0.2
NSA no. 3 (residences)	1,850 feet	Southeast	39.5	31.8	40.2	0.7
NSA no. 4 (residences)	2,000 feet	Northeast	36.5	30.9	37.5	1.0
NSA no. 5 (residence)	2,100 feet	Northwest	39.7	30.2	40.2	0.5

[a] Existing background noise data based on noise impact estimates associated with the Hinsdale Compressor Station currently under construction.

Based on our assessment of the noise analyses prepared for the Project, we conclude that operation of the proposed aboveground facilities, with accompanying noise mitigation measures such as acoustical enclosures, exhaust mufflers, and other facility design measures, if properly implemented, would not result in an exceedance of our 55 dBA L_{dn} noise standard or result in a significant noise impact at the nearby NSAs. However, to verify that equipment and noise mitigation measures are properly implemented and to verify compliance with the FERC's noise standard, **we recommend that:**

- **National Fuel should file with the Secretary, for review and approval of the Director of OEP, a noise survey <u>no later than 60 days</u> after placing each of the aboveground facilities into service. If a full load condition noise survey is not possible, National Fuel should provide an interim survey at the maximum possible power load and provide the full power load survey <u>within 6 months</u>. If the noise attributable to the operation of all of the equipment at any facility at interim or full power load conditions exceeds 55 dBA L_{dn} at any nearby NSAs, National Fuel should file a report on what changes are needed and should install additional noise controls to meet the level <u>within 1 year</u> of the in-service date. National Fuel should confirm compliance with**

the above requirement by filing a second noise survey with the Secretary <u>no later than 60 days</u> after it installs the additional noise controls.

<u>Other Aboveground Facilities</u>

Other aboveground facilities include 13 MLV sites, cathodic protection facilities, and the Clermont interconnect/tie-in facility. These facilities would not result in noise during normal operation; however, on a very infrequent basis, noise may result from blowdown events.

<u>Blowdown Events</u>

During pipeline operation, blowdown events occur either during planned maintenance activities or as a result of unplanned events. Both the Porterville and Pendleton Compressor Stations would utilize a blowdown/vent system. During the period of commissioning and testing of the compressor units, it is anticipated that a blowdown could occur three to four times daily, typically only during the daytime hours. During normal operation of the station (after the commissioning period), it is anticipated that blowdown events would occur infrequently (two to three times monthly). The duration of a blowdown event generally lasts for a short amount of time (approximately 1 to 5 minutes).

The estimated sound level of a blowdown at the Porterville Compressor Station would be approximately 52 dBA L_{dn} at the closest NSA, and the estimated sound level of a blowdown at the proposed Pendleton Compressor Station would be approximately 41 dBA L_{dn} at the closest NSA. Therefore, a blowdown event may be audible at the NSAs, but would be less than the 55 dBA L_{dn} criterion. As unit blowdown events occur infrequently and only for a short time, the impact of unit blowdowns at nearby NSAs would be minimal.

Based on the estimated sound levels, adherence to noise regulations, and our recommendation, we conclude that the noise attributable to operation of the Project, including pipeline and aboveground facilities, would not cause a significant impact on the noise environment in the project area.

9. Reliability and Safety

Transportation of natural gas by pipeline involves some incremental risk to the public due to the potential for an accidental release of natural gas. The greatest hazard is a fire or explosion following a major pipeline rupture.

Methane, the primary component of natural gas, is colorless, odorless, and tasteless. It is not toxic, but is classified as a simple asphyxiate, posing a slight inhalation hazard. If methane is breathed in high concentrations, oxygen deficiency can occur resulting in serious injury or death.

Methane has an auto-ignition temperature of 1,000 °F and is flammable at concentrations between 5 and 15 percent methane by volume. Unconfined mixtures of methane in air are not generally explosive. Methane is buoyant at atmospheric temperatures and disperses rapidly in air.

a. Safety Standards

The DOT is mandated to provide for pipeline safety under 49 U.S. Code Chapter 601. Within the DOT, the Pipeline and Hazardous Materials Safety Administration (PHMSA), Office of Pipeline Safety, administers the national regulatory program to ensure the safe transportation of natural gas and other hazardous materials by pipeline. PHMSA develops regulations and other approaches to risk management that ensure safety in the design, construction, testing, operation, maintenance, and emergency response of pipeline facilities. Many of the regulations are written as performance standards that set a level of safety to be attained and allow the pipeline operator to use various technologies to achieve the required standard.

The DOT pipeline standards are published in 49 CFR Parts 190-199. Part 192 specifically addresses natural gas pipeline safety issues. Under a Memorandum of Understanding on Natural Gas Transportation Facilities dated January 15, 1993, between the DOT and the FERC, the DOT is recognized as having the exclusive authority to promulgate federal safety standards used in the transportation of natural gas. Section 157.14(a)(9)(vi) of the FERC's regulations requires that an applicant certify that it will design, install, inspect, test, construct, operate, replace, and maintain the facility for which a Certificate is requested in accordance with federal safety standards and plans for maintenance and inspection, or certify that it has been granted a waiver of the requirements of the safety standards by the DOT in accordance with Section 3(e) of the Natural Gas Pipeline Safety Act. The FERC accepts this certification and does not impose additional safety standards other than the DOT standards. If the Commission becomes aware of an existing or potential safety problem, there is a provision in the Memorandum to promptly alert the DOT. The Memorandum provides instructions for referring complaints and inquiries made by state and local governments and the general public involving safety matters related to pipelines under the Commission’s jurisdiction.

The FERC also participates as a member of the DOT’s Technical Pipeline Safety Standards Committee, which determines if proposed safety regulations are reasonable, feasible, and practicable.

Section 5(a) of the Natural Gas Pipeline Safety Act provides for a state agency to assume all aspects of the safety program for intrastate facilities by adopting and enforcing the federal standards, while Section 5(b) permits a state agency that does not qualify under Section 5(a) to perform certain inspection and monitoring functions. A state may also act as DOT’s agent to inspect interstate facilities within its boundaries; however, the DOT is responsible for enforcement actions. New York has been delegated authority to inspect interstate pipeline facilities, but Pennsylvania has not been delegated authority to inspect interstate pipeline facilities.

The Pipeline Safety, Regulatory Certainty and Job Creation Act of 2011 (U.S. House of Representatives 2845) was passed by Congress and signed into law on January 3, 2012. This Act states that no later than 2 years after the date of enactment, the DOT Secretary, if appropriate, shall require by regulation the use of automatic or remote control shut-off valves, or equivalent technology, where economically, technically, and operationally feasible on transmission pipeline facilities constructed or entirely replaced after the date on which the Secretary issues the final rule containing such requirement. Prior to this law taking effect, National Fuel committed to the

use of remotely controlled shut-off valves on the project pipeline. The locations for these remotely controlled valves are selected based on DOT area class location requirements.

Several commenters expressed concerns about the operation and maintenance of the remote control shut-off valves that would be installed as part of the proposed Project. The valves would be operated and monitored remotely by National Fuel's Gas Control and Operations Center (GCOC) in West Seneca, New York, which is staffed 24 hours a day. The valves would be constructed, inspected, and maintained in accordance with DOT regulations and standards.

The DOT defines area classifications based on population density in the vicinity of the pipeline and specifies more rigorous safety requirements for populated areas. Pipe wall thickness and pipeline design pressures, hydrostatic test pressures, MAOP, inspection and testing of welds, and frequency of pipeline patrols and leak surveys must conform to higher standards in more populated areas. The class location unit is an area that extends 220 yards on either side of the centerline of any continuous 1-mile length of pipeline. The four area classifications are defined below:

- Class 1: Location with 10 or fewer buildings intended for human occupancy;
- Class 2: Location with more than 10 but less than 46 buildings intended for human occupancy;
- Class 3: Location with 46 or more buildings intended for human occupancy or where the pipeline lies within 100 yards of any building, or small well-defined outside area occupied by 20 or more people on at least 5 days a week for 10 weeks in any 12-month period; and
- Class 4: Location where buildings with four or more stories aboveground are prevalent.

In accordance with federal standards, class locations representing more populated areas require higher safety factors in pipeline design, testing, and operation. Pipelines constructed in Class 1 locations must be installed with a minimum depth of cover of 30 inches in normal soil and 18 inches in consolidated rock. Class 2, 3, and 4 locations, as well as drainage ditches of public roads and railroad crossings, require a minimum cover of 36 inches in normal soil and 24 inches in consolidated rock. All pipelines installed in navigable rivers, streams, and harbors must have a minimum cover of 48 inches in soil or 24 inches in consolidated rock. Class locations specify the maximum distance to sectionalized block valves (e.g., 10.0 miles in Class 1, 7.5 miles in Class 2, 4.0 miles in Class 3, and 2.5 miles in Class 4). Approximately 59.3 miles (61 percent) of the Project would be located in Class 1 areas, 36.6 miles (38 percent) would be located in Class 2 areas, and 0.95 miles (1 percent) would be located in Class 3 areas. None of the Project occurs in Class 4 areas.

If the Project is approved, the DOT regulations require that the pipeline be designed, at a minimum, to the appropriate class location standard and that the spacing between MLVs meets DOT requirements.

National Fuel has asserted that the 16-inch- and 24-inch-diameter pipelines and the aboveground facilities associated with the Project would be designed, constructed, operated, and maintained in accordance with or to exceed the DOT Minimum Federal Safety Standards in 49 CFR 192. These regulations, which are intended to protect the public and to prevent natural gas facility accidents and failures, include specifications for material selection and qualification, minimum design requirements, and protection of the pipeline from internal, external, and atmospheric corrosion.

If a subsequent increase in population density adjacent to the right-of-way indicates a change in class location for the pipeline, National Fuel would reduce the MAOP or replace the segment with pipe of sufficient grade and wall thickness, if required, to comply with the DOT code of regulations for the new class location.

The Pipeline Safety Improvement Act of 2002 requires operators to develop and follow a written integrity management program that contains all the elements described in 49 CFR 192.911 and addresses the risks on each transmission pipeline segment. Specifically, the law establishes an integrity management program that applies to all high consequence areas (HCA).

The DOT published rules that define HCAs where a gas pipeline accident could do considerable harm to people and their property and requires an integrity management program to minimize the potential for an accident. This definition satisfies, in part, the Congressional mandate for DOT to prescribe standards that establish criteria for identifying each gas pipeline facility in a high-density population area.

The HCAs may be defined in one of two ways. In the first method, an HCA includes:

- current Class 3 and 4 locations;
- any area in Class 1 or 2 locations where the potential impact radius[14] is greater than 660 feet and there are 20 or more buildings intended for human occupancy within the potential impact circle[15]; or
- any area in Class 1 or 2 locations where the potential impact circle includes an identified site.

An identified site is an outside area or open structure that is occupied by 20 or more persons on at least 50 days in any 12-month period; a building that is occupied by 20 or more persons on at least 5 days a week for any 10 weeks in any 12-month period; or a facility that is occupied by persons who are confined, are of impaired mobility, or would be difficult to evacuate.

In the second method, an HCA includes any area within a potential impact circle that contains:

- 20 or more buildings intended for human occupancy; or
- an identified site.

---

[14] The potential impact radius is calculated as the product of 0.69 and the square root of the MAOP of the pipeline in pounds per square inch multiplied by the pipeline diameter in inches.

[15] The potential impact circle is a circle of radius equal to the potential impact radius.

National Fuel has determined that there are no HCAs along the proposed pipelines.

Once a pipeline operator has determined the HCAs on its pipeline, it must apply the elements of its Integrity Management Plan to those segments of the pipeline within HCAs. The DOT regulations specify the requirements for the Integrity Management Plan at 49 CFR 192.911. The pipeline integrity management rule for HCAs requires inspection of the pipeline every 7 years.

49 CFR 192 prescribes the minimum standards for operating and maintaining pipeline facilities including the requirement to establish a written plan governing these activities. Under 49 CFR 192.615, each pipeline operator must also establish an emergency plan that includes procedures to minimize the hazards in a natural gas pipeline emergency. Key elements of the plan include procedures for:

- receiving, identifying, and classifying emergency events, gas leakage, fires, explosions, and natural disasters;
- establishing and maintaining communications with local fire, police, and public officials and coordinating emergency response;
- initiating the emergency shutdown of system and safe restoration of service;
- making personnel, equipment, tools, and materials available at the scene of an emergency; and
- protecting people first and then property and making them safe from actual or potential hazards.

49 CFR 192 requires that each operator establish and maintain liaison with appropriate fire, police, and public officials to learn the resources and responsibilities of each organization that may respond to a natural gas pipeline emergency and to coordinate mutual assistance. The operator must also establish a continuing education program to enable customers, the public, government officials, and those engaged in excavation activities to recognize a gas pipeline emergency and report it to appropriate public officials.

National Fuel currently maintains a program of coordination with public authorities (e.g., local fire departments, community emergency coordinators) and local utilities for all its facilities in New York and Pennsylvania and conducts meetings at least annually to discuss mutual response expectations. Some key components of the program include:

- maintaining and distributing a current listing of all contact information and telephone numbers for local police and fire departments and other public officials;
- holding special informational meetings and training at the request of the municipality; and
- inviting the local fire departments to participate in its periodic fire response demonstrations.

National Fuel also maintains operating policies and procedures that provide specific directions in preventive maintenance and monitoring of facilities, as well as procedures to be followed in the event of an accident or natural catastrophe. Periodic training sessions and review of operating and emergency procedures are conducted for all affected operations employees. This training includes safe operation of pipeline valves and equipment; aboveground facilities, including meter stations and compressor stations; hazardous material handling procedures; public liaison programs; and general operating procedures. The project facilities would be operated and maintained in accordance with these procedures.

In the event of an emergency, one of National Fuel's primary roles is to isolate the affected facility to stop the flow of gas to the site. First responders are trained and instructed not to operate any valves on the system. National Fuel's personnel with knowledge of the system will perform any operations pertaining to the operating of valves. First responders' primary role is that of evacuation and creating a safe zone by cordoning off the emergency site and moving affected citizens to a safe location. Roles of responders, roles of National Fuel personnel, properties of natural gas, and "tabletop" scenarios are covered in these classes.

Several commenters expressed concerns about the emergency response time from National Fuel for the Pendleton Compressor Station and the response capabilities of local first responders. National Fuel has commented that it is capable of responding to gas leaks within 17 minutes of detection. The nature of the leak or emergency would determine the radius of evacuation; the direct notification would include avoiding actions that could cause an ignition source. National Fuel crews are trained and outfitted to respond and function in inclement weather, including the winters of 2014 and 2015. Crews responding to the Pendleton facility would be dispatched according to the skill set necessary to correct the problem at that particular time and would originate from several different National Fuel Gas Distribution Corporation and National Fuel Gas Supply Corporation service centers which are staffed 24 hours per day.

National Fuel will incorporate the facilities proposed by this Project into its emergency response plans that currently cover existing facilities and will work with first responders in the community to develop modifications to a local community's plan as necessary.

National Fuel would perform annual leak detection surveys of its pipeline facilities, similar field surveys of its aboveground facilities, and periodic aerial and vehicle/pedestrian surveys of all its facilities. All of National Fuel's facilities also include equipment features that ensure the overall safety of the system and the general public.

National Fuel would register with the one-call system programs and other related pre-excavation notification organizations in New York and Pennsylvania prior to the operation of the Project. Through these programs, National Fuel would be informed of planned third-party excavations, which would allow National Fuel to monitor activities around the right-of-way and to protect the pipeline.

In addition to pipeline safety standards, National Fuel would adhere to 49 CFR Parts 192.739 through 192.743 guidelines for inspection and monitoring at pressure limiting and regulating stations. National Fuel's construction of the project facilities would be designed, constructed, and operated to meet or exceed applicable specifications. The piping at the facilities would be manufactured in accordance with API specifications, and wall thickness would conform to PHMSA safety regulations contained in 49 CFR 192.

National Fuel would monitor and control all of its pipeline systems from the existing GCOC in West Seneca, New York via a supervisory control and data acquisition system that electronically monitors and controls operations and alerts personnel if a leak or other malfunction within the system is detected. All GCOC personnel would be trained and qualified according to Federal Control Room Management standards and operator qualification. GCOC's function is to dispatch gas flow on the pipeline system and to monitor the system for emergencies and potential abnormal operating conditions. The corporate supervisory control and data acquisition (SCADA) system provides complete system operating data and alarms, providing the GCOC personnel the information to immediately identify developing gas system issues and the controls to mitigate the specific situation prior to it becoming an upset or abnormal operating condition. This approach applies to all system gas facilities including compressor stations. GCOC personnel also have the ability to remove compressor units from service and to initiate a compressor station emergency shutdown to alleviate a more serious operating problem. Once identified, this reaction is immediate. Total isolation, once initiated either remotely or on site, would be less than five minutes.

The proposed compressor station automation system, including all safety systems and emergency shutdown systems, are continuously monitoring hundreds of station operating parameters. This provides several layers of operational control overlap that would be built into the compressor station as a safety function. One of the critical safety functions that the compressor station would be equipped with is leak detection equipment (combustible gas and flame-ionization leak detectors). In the event that an abnormal operating or emergency condition occurs, the unit and station controllers immediately react to isolate the particular problem and make the situation safe, including the possible shut down of specific compressor units or the complete shutdown and isolation of the entire compressor station from the pipeline. This action is immediate and requires no intervention from Operations or GCOC personnel; consequently neither the lack of commercial power nor telecommunication links interrupts the capability of the system to perform. In addition to these layers, GCOC personnel would remotely monitor the station and would be capable of shutting down the station. Lastly, manual intervention can shut down individual units or the entire station. Manual intervention is also required to reset a station shutdown.

b. Pipeline Accident Data

The DOT requires all operators of natural gas transmission pipelines to notify the DOT of any significant incidents and to submit a report within 20 days. Significant incidents are defined as any leaks that:

- cause a death or personal injury requiring hospitalization; or
- involve property damage of more than $50,000 in 1984 dollars[16].

During the 20-year period from 1995 through 2014, a total of 1,269 significant incidents were reported on the more than 300,000 total miles of natural gas transmission pipelines nationwide.

[16] $50,000 in 1984 dollars is approximately $113,000 as of April 2015 (Bureau of Labor Statistics, 2015).

Additional insight into the nature of service incidents may be found by examining the primary factors that caused the failures. Table B.9.b-1 provides a distribution of the causal factors as well as the number of each incident by cause. The dominant incident causes, corrosion and pipeline material, weld, or equipment failure, comprise 49.5 percent of all significant incidents. However, the pipelines included in the data set in table B.9.b-1 vary widely in terms of age, pipe diameter, and level of corrosion control. Each of these variables influences the incident frequency that may be expected for a specific segment of pipeline. The frequency of significant incidents, for example, is strongly dependent on pipeline age. Older pipelines have a higher frequency of corrosion incidents because corrosion is a time-dependent process.

TABLE B.9.b-1

Natural Gas Transmission Pipeline Significant Incidents by Cause (1995 to 2014) [a]

Cause	Number of Incidents	Percentage [b]
Corrosion	290	22.9
Excavation [c]	207	16.3
Pipeline Material, Weld or Equipment Failure	337	26.6
Natural Force Damage	149	11.7
Outside Forces [d]	79	6.2
Incorrect Operation	40	3.5
All Other Causes [e]	167	13.2
TOTAL	1,269	--

[a] From PHMSA (PHMSA, 2015b).
[b] Due to rounding, column does not total 100 percent.
[c] Includes third-party damage.
[d] Fire, explosion, vehicle damage, previous damage, intentional damage.
[e] Miscellaneous causes or unknown causes.

The use of both an external protective coating and a cathodic protection system, required on all pipelines installed after July 1971, significantly reduces the corrosion rate compared to unprotected or partially protected pipe[17].

Excavations, natural forces, and outside forces are the causes in 34.2 percent of significant pipeline incidents. Table B.9.b-2 presents information on the outside forces incidents by cause. These mostly result from the encroachment of mechanical equipment such as bulldozers and backhoes; earth movements due to soil settlement, washouts, or geologic hazards; weather effects such as winds, storms, and thermal strains; and willful damage.

Older pipelines have a higher frequency of outside forces incidents partly because their location may be less well known and less well marked than newer lines. In addition, the older pipeline systems contain a disproportionate number of smaller diameter pipelines, which have a greater rate of outside forces incidents. Small-diameter pipelines are more easily crushed or broken by mechanical equipment or earth movements.

[17] Cathodic protection is a technique to reduce corrosion (rust) of the natural gas pipeline that includes the use of an induced current or a sacrificial anode (like zinc) that corrodes at faster rate to reduce corrosion.

c. Impact on Public Safety

Although the transportation of natural gas via the pipeline involves some degree of risk to the public in the event of an accident and subsequent release of gas, it is important to examine the probabilistic level of risks for pipeline-related events. According to PHMSA, there are 2.6 million miles of pipelines that cross the United States, and those pipelines offer a safe and cost-efficient way to transport natural gas (PHMSA, 2015a). Table B.9.c-1 presents the average annual injuries and fatalities that occurred on natural gas transmission lines between 2010 and 2014. The data have been separated into employees and nonemployees to better identify a fatality rate experienced by the general public.

TABLE B.9.b-2

Outside Forces Incidents by Cause (1995-2014) [a]

Cause	Number of Incidents	Percent of all Incidents [b]
Third-party excavation damage	173	13.6
Operator excavation damage	23	1.8
Unspecified equipment damage/Previous damage	11	0.9
Heavy Rain/Floods	72	5.7
Earth Movement	35	2.8
Lightning/Temperature/High Winds	27	2.1
Unspecified Natural Force	9	0.7
Vehicle (not engaged with excavation)	47	3.7
Fire/Explosion	8	0.6
Previous mechanical damage	6	0.5
Intentional damage	1	0.1
Fishing or maritime activity	7	0.6
Electrical arcing from other equipment/facility	1	0.1
TOTAL	420	--

[a] Excavation, outside forces, and natural force damage from table B.9.b-1 (PHMSA, 2015b).
[b] Due to rounding, column does not equal 34.2 percent.

The majority of fatalities from pipelines involve local distribution pipelines. These are natural gas pipelines that are not regulated by the FERC and that distribute natural gas to homes and businesses after transportation through interstate natural gas transmission pipelines. In general, these distribution lines are smaller diameter pipes, often made of plastic or cast iron rather than welded steel, and tend to be older pipelines that are more susceptible to damage. In addition, distribution systems do not have large rights-of-way and pipeline markers common to the FERC-regulated natural gas transmission pipelines.

TABLE B.9.c-1

Annual Average Fatalities – Natural Gas Transmission Pipelines [a]

	Injuries		Fatalities	
Year	Employees	Public	Employees	Public
2010 [b]	3	58	0	10
2011	1	0	0	0
2012	1	6	0	0
2013	0	2	0	0
2014	0	0	1	0

[a] From PHMSA (PHMSA, 2015b).

[b] All of the public injuries and fatalities in 2010 were due to the Pacific Gas and Electric pipeline rupture and fire in San Bruno, California on September 9, 2010.

The nationwide totals of accidental fatalities from various manmade and natural hazards are listed in table B.9.c-2 to provide a relative measure of the industry-wide safety of natural gas transmission pipelines. Direct comparisons between the different accident categories listed in the table should be made cautiously because individual exposures to hazards are not uniform among all categories. The data nonetheless indicate a low risk of death due to incidents involving natural gas transmission pipelines compared to the other categories. For example, the fatality rate for incidents involving natural gas pipelines is more than 25 times lower than the rate from natural hazards such as lightning, tornados, floods, and earthquakes.

TABLE B.9.c-2

Nationwide Accidental Deaths [a]

Type of Accident	Annual Number of Deaths
All accidents	123,706
Motor Vehicle	43,945
Poisoning	29,846
Falls	22,631
Drowning	3,443
Fire, smoke inhalation, burns	3,286
Floods [b]	85
Lightning [b]	51
Tornado [b]	75
Natural gas distribution lines [c]	14
Natural gas transmission pipelines [c]	2

[a] All data, unless otherwise noted, reflect 2007 statistics from the U.S. Census Bureau, Statistical Abstract of the United States: 2012 (131st Edition) Washington, DC, 2011 (http://www.census.gov/compendia/statab).

[b] NOAA National Weather Service, Office of Climate, Water and Weather Services, 30-year average (1984-2013) (http://www.weather.gov/om/hazstats.shtml).

[c] From PHMSA (PHMSA, 2015b).

The available data show that natural gas transmission pipelines continue to be a safe, reliable means of energy transportation. From 1995 to 2014, there were an average of 63 significant incidents and 2 fatalities per year (PHMSA, 2015b). The number of significant incidents over the more than 300,000 miles of natural gas transmission lines indicates the risk is low for an incident at any given location. The operation of the Project would represent a slight increase in risk to the nearby public.

We received a comment regarding the safety of individuals that use the abandoned railroad tracks near the Pendleton Compressor Station property. The location of the proposed compressor station is not contiguous with the abandoned railroad grade, therefore there would be no incremental safety issues related to the use of this area.

We received several comments regarding the safety measures that would be implemented at the Pendleton Compressor Station to prevent acts of vandalism or terrorism from occurring at the station. The proposed safety measures at the Pendleton Compressor Station include surveillance cameras monitoring the property from various vantage points; an alarm system in key buildings with motion detectors; and door contacts that are monitored 24 hours a day, seven days a week; main gate operator with access controlled through a "swipe" card; a “cattle style” gate at the road entrance; and an 8-foot-tall chain linked fence topped with barbed wire around the station yard.

Several commenters expressed concerns about the Pendleton Compressor Station’s proximity to the adjacent gun club’s property and shooting range and that a stray bullet from the range could impact components of the compressor station. The chance of a stray bullet from the gun club damaging any component of the compressor station is minimal. The shooting range's closest distance to the proposed compressor station is approximately 2,400 feet, of which approximately 1,700 feet is a densely wooded area. A stray bullet headed in the direction of the compressor station from the shooting range would most likely not pass through the wooded area. Additionally, shooting range ammunition is generally designed for target shooting and does not have the same impact as live ammunition used for hunting or by law officers. Furthermore, the planned construction design of the compressor station places the piping and cables underground, with the major components enclosed in buildings. A stray bullet, after travelling 2,400 feet, even if it were to miss every tree in the densely wooded area, would be highly unlikely to penetrate the ground or a building to the point where it could cause significant damage to components of the facility.

We also received several comments expressing concerns about hexavalent chromium being present in coatings applied to the existing XM-10 pipeline. Reviews of as-built drawings and safety data sheets of the XM-10 pipeline indicate that hexavalent chromium was not a component of the coatings applied to the pipeline.

Based on the proposed Pendleton Compressor Station being located along Killian Road, it would eliminate the need for any significant work to be done on the XM-10 pipeline, and avoids disturbance to areas adjacent to the Frontier Chemical site. The Frontier Chemical site was mentioned as a concern by several commenters and would not be impacted by this Project.

The Killian Road location also moves the proposed compressor station site further away from the Starpoint Central Schools campus than the originally proposed site on Aiken Road. This was also a concern that was mentioned by several commenters.

10. Cumulative Impacts

The first European settlements in New York date back to the early-seventeenth century and in Pennsylvania date back to the mid-seventeenth century. However, indigenous peoples who lived in large settlements and associated satellite villages occupied the region more than 15,000 years ago. Currently, New York is the third and Pennsylvania is the sixth most populated state in America. Consequently, the natural environment has been modified numerous times over a very long period of occupation.

In accordance with NEPA, we considered cumulative impacts of the Northern Access 2016 Project and other projects or actions in the ROI for the Northern Access 2016 Project. As defined by CEQ (CEQ, 1997b), a cumulative effect is the impact on the environment which results from the incremental impact of the action when added to other past, present, or reasonably foreseeable actions, regardless of what agency or person undertakes such other actions. CEQ guidance (CEQ, 2005; EPA, 1999) states that an adequate cumulative effects analysis may be conducted by focusing on the current aggregate effects of past actions without delving into the historical details of individual past actions. In this analysis, we consider the impacts of past projects within the regions of influence as part of the affected environment (environmental baseline) which was described and evaluated in the preceding environmental analysis.

Consistent with CEQ guidance and to determine cumulative impacts, we expanded the geographic boundaries of our review to evaluate each resource within a defined ROI, as described below. Actions located outside the ROI for each resource are generally not evaluated because their potential to contribute to a cumulative impact diminishes with increasing distance from the Project.

As described in the environmental analysis section of this EA, constructing and operating the Project would temporarily and permanently impact the environment. The Project would impact geology, soils, water resources, vegetation, wetlands, wildlife, cultural resources, visual resources, air quality, noise, and land use. However, we conclude that these impacts would not be significant. We also conclude that nearly all of the project-related impacts would be contained within or adjacent to the temporary construction right-of-way and ATWS. For example, erosion control devices included in National Fuel's construction and restoration plans would keep disturbed soils within work areas. For other resources, the contribution to regional cumulative impacts is lessened by the expected recovery of ecosystem function. For example, the Project would impact 89.4 acres of wetlands; however, permanent impacts would be limited to the conversion of the vegetation cover, and most wetlands would remain as functional wetland habitat. This is in contrast to other large-scale development projects in which large wetland tracts are permanently converted to uplands or commercial/industrial use. Similarly, vegetation communities would be cleared by the Project, but restoration would proceed immediately following construction. Additionally, we determined that visual impacts would be minimal along much of the pipeline route (along existing powerline and pipeline rights-of-way) and at the modified facility (Porterville Compressor Station), due to the co-location with existing infrastructure.

Based on these conclusions and determinations, the co-location of the project pipeline with existing rights-of-way, National Fuel's implementation of impact avoidance, minimization, and mitigation measures as described in its construction and restoration plans, as well as our recommendations, we find most of the impacts of the Project would be largely limited to the immediate construction right-of-way and ATWS. Furthermore, because the impacts of the Project would be localized, they would only contribute incrementally to the cumulative impact in the ROI. As a result, we have related the scope of our analysis to the magnitude of the aforementioned environmental impacts.[18]

Based on the impacts of the Project as identified and described in this EA and consistent with CEQ guidance, we have determined that the following resource-specific ROIs are appropriate to assess the purpose of the cumulative impact analysis is to identify and describe cumulative impacts that would potentially result from implementation of the Project. This cumulative impact analysis generally follows the methodology set forth in relevant guidance (CEQ, 1997b; EPA, 1999). Under these guidelines, inclusion of other projects within the analysis is based on identifying commonalities of impacts from other projects with impacts that would result from the Project. The cumulative impacts analysis includes actions meeting the following three criteria:

- A project must impact a resource category potentially affected by the proposed project. For the most part, these projects are located in the same general area that would be directly affected by construction of the Northern Access 2016 Project. The effects of more distant projects are in most cases not assessed, because their impacts would tend to be localized and not contribute significantly to the impacts of the proposed project. Potential cumulative impacts on air quality and watersheds, however, were considered on a broader, more regional basis.

- The distance into the past and future that other projects could cumulatively impact the area of the Northern Access 2016 Project is based on whether the impacts are short-term, long-term, or permanent. The majority of the impacts relating to the proposed project would occur during the construction phase, which could extend from late 2016 through late 2017 (or later, depending on permitting timing).

- Where a potential for cumulative impacts exists, those impacts are quantified to the extent practicable; however, in some cases the potential impact can only be described qualitatively. This is particularly the case for projects that are in the planning stages; are contingent on economic conditions, availability of financing, and/or the issuance of permits; or for which there is a lack of available information.

The following cumulative analysis considered projects meeting one or more of the parameters listed below. These parameters define the projects' ROIs used in our analysis to describe the general area for which the proposed projects could potentially contribute to cumulative impacts. The ROI varies with the resource discussed. Specifically, this includes:

[18] Please note that this narrow corridor is not the expanded area of our cumulative impacts review, it is only the area directly affected by the Project.

- geological and soil resources within the proposed projects' footprint; projects within the proposed projects' boundaries of the same eight-digit hydrologic unit code watersheds affecting water resources and aquatic resources;
- projects located within 0.5 mile of the proposed project's areas that may also impact wildlife, vegetation, and land use;
- socioeconomic conditions in counties within the proposed project's construction areas and that will incur construction traffic, and where non-local workers are expected to reside during construction and operations personnel are expected to reside permanently;
- projects located within 0.25 mile of the proposed project's construction workspaces that may affect short-term air quality, and projects located within 50 kilometers (~31 miles), or other specific site-specific distance of the proposed Project's aboveground facilities proposing additional natural gas compressor engines that may affect long-term air quality; and
- projects located within 0.25 mile of the proposed project's construction workspaces that may produce noise that affects the local environment; and projects that produce noise that may impact NSAs within 1 mile of Project compressor stations.

The actions considered in our cumulative impact analysis may vary from the Project in nature, magnitude, and duration. These actions are included based on the likelihood of completion near the proposed time span of the proposed project, and only projects with either ongoing impacts or that are "reasonably foreseeable" future actions were evaluated. Existing or reasonably foreseeable actions that would be expected to affect similar resources during similar periods as the Project were considered further. The anticipated cumulative impacts of the proposed project and these other actions are discussed below, as well as any pertinent mitigation actions. The projects that were considered for cumulative impacts are listed in appendix G.

We identified three types of projects that could potentially cause a cumulative impact when considered with the Northern Access 2016 Project. These include: 11 FERC-regulated natural gas projects, 3 FERC-regulated hydropower projects, 9 non-FERC regulated oil and gas projects, 8 mining projects, 5 electric transmission and generation projects, 10 public utility projects, 22 residential and commercial development projects, and 8 transportation projects (see appendix G). Oil and natural gas wells and gathering lines are present throughout the region and are considered one project within appendix G for the purpose of this analysis. Each project or action identified in our analysis is associated with one or more ROIs that were identified for cumulative impacts on different resources. We identified these projects through scoping and independent research, as well as information provided by National Fuel.

Potential impacts likely to be cumulative with the Project's impacts are related to geology and soils; water resources, vegetation, fisheries, and wildlife (including federal- and state-listed threatened and endangered species); land use and visual resources; socioeconomics; cultural resources; air quality; noise; and climate change. The proposed pipeline facilities could contribute to these cumulative impacts; however, National Fuel would minimize adverse Project impacts by implementing appropriate measures as described in section B of this EA.

a. Soils and Geology

The ROI considered for cumulative impacts on geology and soils is 0.25 mile from the Project, as impacts are generally localized to the construction right-of-way. Construction associated with the Project would result in temporary and minor impacts on soils and geology near the surface, as discussed in section B.1. Because the effects would be highly localized and limited to the period of construction, cumulative impacts on soils and geology would primarily occur if other projects are constructed at the same time and within 0.25 mile of the Northern Access 2016 Project. Of the projects listed in appendix G, seven projects were identified within the ROI.

Several commenters expressed concern about the cumulative impact of mining operations in the region. There are active sand, gravel, or stone mining operations within 0.25 mile of the project facilities; however, the pipeline would be co-located with existing powerline rights-of-way where it is closest to these mining facilities (NYDEC, 2015a; PADEP, 2015a; USGS, 2014b). No cumulative impacts on mineral extraction, mining, or other deeper geologic resources would be anticipated since the Project would be located away from existing resources and adjacent to existing utility rights-of-way. The Project would not directly impact deeper geological resources; therefore, no cumulative impact on geological resources is anticipated.

Several commenters also expressed concern about the cumulative impacts of oil and gas wells within the region. There are 66 active oil and gas wells, 34 plugged and abandoned oil and gas wells, 13 oil and gas wells with unknown status, and 6 wells that were proposed but never drilled within 0.25 mile of the proposed project facilities. Seven oil and gas wells were identified within 150 feet of the construction right-of-way; however, all of these wells would be located outside of the construction workspace (NYDEC, 2015a: PADEP, 2015b). Impacts of drilling activities involve well pad development, improvement of existing dirt and paved roads, construction of new access roads, and construction of gathering pipeline systems. All of these activities are outside of the Commission's jurisdiction and are under the jurisdiction of the PADEP and the NYSDEC. Impacts on soils from the Project would generally be temporary, and National Fuel would minimize impacts on soils through implementation of measures contained in its ESCAMP, including measures to avoid topsoil mixing, compaction, and erosion. Operation and maintenance activities constitute reasonably foreseeable future actions, and any impacts associated with these activities, although direct, would be temporary.

The Pennsylvania Electric Company Project, Keating Township sewer installation project, oil and gas well development, NFG Midstream Clermont, LLC 24-inch-diameter Pipeline Installation Project, and Beach Ridge Meadows Subdivision Project are within the ROI and would be constructed within the same timeframe as the Project and could contribute to cumulative impacts on soil. Depending on soil conditions, these impacts may include loss of excavated soil from water and wind erosion, soil compaction from construction equipment, and mixing of subsoil and topsoil. Cumulative impacts could result from the proposed project and the projects listed above being constructed in close proximity and at the same time. However, all of these projects are regulated by the PADEP and NYSDEC which would require certain erosion and sediment control measures for these types of construction projects. The Project's impacts on soils are expected to be minor as most construction would take place within previously disturbed rights-of-way and existing aboveground facility sites. Construction and restoration activities as

well as operation and maintenance activities would be monitored throughout the process to ensure compliance with National Fuel's ESCAMP and applicable permits. Consequently, any potential cumulative impacts on soils are anticipated to be temporary and minor.

b. Water Resources

Cumulative effects on water resources (i.e., groundwater, surface waters, and wetlands) affected by the Project would be limited primarily to the water resources that are affected by other current, proposed, or reasonably foreseeable future projects within the same major watershed. The Project would cross four watershed subbasins (i.e., 8-digit hydrologic unit codes): Niagara, Buffalo-Eighteenmile, Cattaraugus, and the Upper Allegheny subbasins.

Groundwater

The cumulative impacts on groundwater resources are expected to be temporary and limited to areas that are affected by other actions near the project facilities. The potential groundwater impacts of these actions would be similar to those described in section B.2.a and could include increased turbidity, reduced water levels, and contamination. Nearby water wells could also be damaged by construction.

The impact of the Project on groundwater resources is expected to be short term and minor. National Fuel would minimize groundwater impacts through the use of both standard and specialized construction techniques, including the measures specified in its ESCAMP, Spill Plan, and Blasting Specifications. If a water supply well is damaged as a result of project construction, National Fuel would ensure that a temporary source of water is provided until the damaged water well is restored to its preconstruction capacity and quality, a replacement water source would be provided, or the landowner would be fairly compensated for damages. All of the other major actions in appendix G that are near the Project, including other FERC-regulated projects, natural gas wells and gathering lines associated with Marcellus Shale development, and non-jurisdictional project-related actions, either have or would be required to obtain water use and discharge permits, implement erosion and sediment controls, and adhere to various Spill Plans as mandated by federal and state agencies, as appropriate.

The completion of natural gas wells, especially for development of the Marcellus Shale in Pennsylvania, has the potential to impact groundwater quality due to gas migration and the use of chemical additives in the drilling process. The Northern Access 2016 Project does not involve fracking and thus would not contribute directly to groundwater impacts associated with fracking. In response to water quality concerns in Pennsylvania, the PADEP has updated its regulations governing the drilling, casing, cementing, testing, monitoring, and plugging of oil and gas wells; and for the protection of water supplies (law signed February 2012 and effective April 2012). This rulemaking includes updated material specifications and performance testing; and amended design, construction, operational, monitoring, plugging, water supply replacement, and gas migration reporting requirements. Oil and gas wells must also be sited at least 500 feet from a drinking water well and at least 100 feet from a spring. According to the PADEP, the additional requirements would provide an increased degree of protection for both public and private water supplies. Drilling companies must now also disclose the chemical additives used in fracking gas wells and appropriately manage drilling return water to prevent impacts on water resources.

For these reasons, we anticipate that the Project would only contribute to minor and temporary cumulative impacts on groundwater.

Waterbodies and Wetlands

A total of 261 waterbodies were identified within the project area, including 79 perennial streams, 102 intermittent streams, 78 ephemeral streams, and 2 dry ditches (see section B.2.b and appendix E). Cumulative impacts on wetlands affected by the Northern Access 2016 Project would be limited primarily to the features that are affected by other actions within the same watershed that are constructed at approximately the same time. The Project would result in temporary impacts on 89.4 acres of wetlands; 28.8 acres of forested wetlands, 11.8 acres of scrub-shrub wetlands, and 48.8 acres of emergent wetland; however, operational impacts on wetlands would be long term, such as the conversion of 6.8 acres of forested and scrub-shrub wetlands to non-forested or emergent wetlands.

We estimate that the projects in appendix G would cross a number of waterbodies and wetlands within the same watersheds as the proposed project. Based on our estimates, the following FERC-regulated projects have identified waterbody crossings and wetland impacts:

- TGP's Northeast Supply Diversification Project crossed 17 minor or intermediate waterbodies and impacted about 108.2 acres of wetlands;
- TGP's 300 Line Project crossed 79 perennial waterbodies and 78 intermittent waterbodies. An additional 29 waterbodies were located within the construction workspace but not crossed by the proposed pipelines or were avoided by use of the HDD method. Approximately 5.1 acres of wetlands were impacted by the project;
- National Fuel's Northern Access and Station 230C Projects impacted one waterbody and avoided wetland impacts;
- TGP and National Fuel's Niagara Expansion and Northern Access 2015 Projects crossed 12 waterbodies and impacted 4.5 acres of wetlands;
- National Fuel's Line TNY Replacement Project crossed 32 waterbodies and impacted 5.9 acres of wetlands;
- National Fuel's Line KNY and KM3 Replacement Project crossed 23 waterbodies and impacted 14.8 acres of wetlands; and
- National Fuel's Line NM-44 New York and Line U 2015 Replacement Project crossed 7 waterbodies and impacted 14 wetlands.

In addition to the FERC-regulated projects identified, the ECOsponsible, Inc.'s Niagara River Community Hydro Project, ECOsponsible, Inc.'s Niagara River Community Hydro Project #2, KC Small Hydro LLC's Scoby Dam Hydropower Project, and the Empire North Expansion Project are in the planning stage and identified potential water resource impacts are not currently available. Of the non-FERC jurisdictional projects, there are 8 oil and gas projects, 8 mining projects, 5 electric projects, 11 utility projects, 22 development projects, and 8 transportation current, proposed, or reasonably foreseeable future projects within the same major watershed.

The greatest impact on wetlands and surface waters by other projects is due to construction within or adjacent to wetlands and waterbodies and storm runoff from disturbed areas during construction. These impacts would be avoided or minimized by National Fuel's implementation of its ESCAMP, Spill Plan, and its use of HDD and dry waterbody crossing methods. The majority of the projects in appendix G were or would be required by local, state, and/or federal agencies to implement mitigation and erosion and sedimentation control measures to minimize impacts on waterbodies. Collectively, these measures would reduce the cumulative impacts on the watersheds encompassing the waterbodies that would be affected by the Project.

The projects in appendix G cross a number of wetlands within the same watersheds as the proposed project. Wetlands crossed within the right-of-way corridor co-located with the projects listed in appendix G would have minimal cumulative impacts on wetlands. There would be a loss of some wetland functions as a result of construction and operation of the Northern Access 2016 Project and the other reasonably foreseeable actions listed in appendix G. National Fuel would mitigate unavoidable construction-related impacts on wetlands by implementing the wetland protection and restoration measures contained in its ESCAMP and by complying with the conditions of permits issued by the USACE, the NYSDEC, and the PADEP, including compensatory mitigation requirements. Similar mitigation measures were likely or would be required for any unavoidable wetland impacts associated with the other projects listed in appendix G. Although construction of the Northern Access 2016 Project along with the other actions listed in appendix G would result in the conversion or reduction in the amount of forested wetlands in the watersheds crossed, the creation of new wetlands and restoration or enhancement of existing wetlands as may be required by the USACE, the NYSDEC, and the PADEP would appropriately mitigate for these impacts and minimize any cumulative wetland effects. The NRCS land use data indicate that there are about 2,958,266 acres of wetlands within the Niagara, Buffalo-Eighteenmile, Cattaraugus, and the Upper Allegheny watersheds (NRCS, 2009a, 2009b, 2009c, 2010). Of this acreage, a minimal portion (less than 0.1 percent) would be affected by multiple projects.

Concerns have been raised regarding the potential impact of Marcellus Shale development on surface water resources. About 1.9 million gallons of water per day is used for Marcellus Shale development in Pennsylvania, or about 0.02 percent of the 9.5 billion gallons of water withdrawn (from surface or groundwater sources) in Pennsylvania per day for all general uses and consumption (Governor's Marcellus Shale Advisory Commission, 2011). The Northern Access 2016 Project would require about 4 million gallons of water during construction in Pennsylvania, primarily for hydrostatic testing. The proposed one-time use of water by the Project would account for about 0.0004 percent of the total water withdrawn per day in Pennsylvania, and thus would not contribute significantly to cumulative water use impacts.

A majority of the projects in appendix G were or would be required by various federal, state, and local agencies to use mitigation measures to minimize erosion and sedimentation into surface water resources. In addition, the proposed project would not result in any permanent fill of surface water resources or alterations of flow. Therefore, construction and operation associated with the proposed project and current, proposed, or reasonably foreseeable future projects would result in temporary and minor impacts on surface water resources. The greatest potential for cumulative impacts would come from an increase in sediment loading from construction within or runoff into wetlands or waterbodies.

As described in section B.2, effects from the construction and operation of the proposed project facilities would be relatively minor and minimized by implementation of National Fuel's ESCAMP and other construction plans and our recommendations. Therefore, we conclude that the Project's minor contribution of additive impacts in the watershed would not contribute to significant cumulative impacts on wetlands or waterbodies.

c. Vegetation, Fisheries, Wildlife, and Threatened, Endangered, and Special Status Species

The ROI considered for cumulative impacts on vegetation, fisheries, and wildlife is the watershed subbasin, which contains the proposed project, as vegetation, fisheries, and wildlife species can be specialized within a watershed. A 5-mile ROI for cumulative impacts on threatened and endangered species was used due to the localized nature of the impacts, particularly for less mobile species. Of the projects in appendix G, 77 projects were identified within the ROI for vegetation, fisheries, and wildlife; 32 projects were identified within the ROI for threatened and endangered species.

It is reasonable to expect that the projects in appendix G involved or would involve vegetation clearing, grading, and other ground-disturbing activities that have the potential to affect fish, wildlife, and vegetation resources within the ROI. General impacts on these resources were or would be similar to those described for the proposed project in section B.3 and include temporary displacement, habitat loss, increased susceptibility to invasive species, and increased mortality rates due to direct impacts and decreased water quality. Construction occurring at the same time or in proximity to the proposed project would increase impacts and lengthen the recovery time for affected vegetation communities and habitats. However, many of the projects and actions listed in appendix G were or would be short-term, with minor impacts on vegetation, fisheries, wildlife, and threatened, endangered, and special status species. The primary impacts of the construction of the proposed project and other current, proposed, or reasonably foreseeable future projects on vegetation, fisheries, and wildlife would be short-term due to removal of vegetation and the displacement of wildlife from construction areas.

Vegetation

Cumulative impacts on vegetation would occur if current, proposed, or reasonably foreseeable future projects within the geographic boundary affected a large percentage of any existing vegetation type or caused a large amount of fragmentation, thus blocking the efficiency of seed distribution. The introduction or spread of invasive, non-native species, such as noxious weeds, also has the potential to cumulatively affect native plant populations. Construction of the proposed project would temporarily affect about 1,206.1 acres of various vegetation types and

permanently impact about 604.9 acres of vegetation, including 338.7 acres of forested lands. Crops and native low-growing vegetation would be allowed to regrow within the rights-of-way and would recover within 1 to 2 years. Forested upland areas within the construction workspace would experience long-term impacts, as the regrowth of forested lands to pre-construction conditions would take 20 to 30 years for many species, while hardwood species could take more than 50 years to reach maturity. This would most likely also be the case for power line and other pipeline projects, while residential or commercial development would limit the regrowth of all native vegetation.

Projects that are constructed in the same general location and timeframe could have a cumulative impact on local vegetation communities. These effects would be greatest during any overlap in the construction timing of these projects. This may result in additional habitat fragmentation where vegetation is modified from forest to either scrub-shrub or herbaceous classes. However, these effects are likely to be minimized due to the majority of National Fuel's proposed facilities being within existing facility sites or co-located with existing infrastructure.

The precise vegetation impacts of many of the actions listed in appendix G are unknown, but information is available that allows us to estimate the cumulative impacts of several of the projects. TGP's 300 Line Project temporarily affected about 996 acres of upland forest land and permanently affect 187 acres of upland forest lands. Construction of the Northeast Supply Diversification and Ellisburg to Craigs Projects affected approximately 53.7 acres of forested lands, of which approximately 15.8 acres was affected during the operation of the pipeline facilities. The Northern Access and Station and Station 230C Projects did not impact forested lands. The Niagara Expansion Project temporarily impacted 8.4 acres of forested lands and permanently impacted 2.9 acres of forested lands. The Northern Access 2015 Project impacted 1.2 acres of forested lands; however, none of this was a permanent impact. The construction area for the National Fuel Line TNY Replacement Project impacted approximately 21.6 acres of forested land. National Fuel's Line KNY and KM3 Replacement Project disturbed approximately 55.4 acres of land, which included approximately 28.1 acres for operation of the pipeline. National Fuel's Line NM-44 NY and Line U 2015 Replacement Project temporarily impacted 5.6 acres of upland forest.

National Fuel has reduced the potential for cumulative impacts associated with the Northern Access 2016 Project by co-locating the pipeline and aboveground facilities where possible with existing rights-of-way and existing aboveground facilities. Following construction, National Fuel would revegetate disturbed areas and monitor these areas to ensure revegetation is successful. Previously forested areas occupying the temporary right-of-way and other temporary workspaces would be allowed to regrow, and vegetation maintenance on the permanent right-of-way would be restricted. Specifically, routine vegetation maintenance of the permanent right-of-way would be limited to annual mowing of a 10-foot-wide strip centered over the pipeline, and mowing of the full width of the right-of-way in uplands would be performed no more frequently than once every 3 years. In wetlands, regular vegetation maintenance would be further restricted by limiting it to annual maintenance of a 10-foot-wide strip and the selective clearing of woody vegetation exceeding 15 feet in height that is within 15 feet of the pipeline centerline. Other FERC-regulated projects were or would likely be required to implement similar measures and restrictions. Marcellus Shale development projects and other non-jurisdictional actions required or would likely be required by state agencies and other federal agencies to implement similar revegetation and monitoring measures designed to minimize the potential for long-term resource

losses. Thus, cumulative impacts on vegetation resulting from the Northern Access 2016 Project, Marcellus Shale development, and other FERC-regulated and non-jurisdictional actions would not be significant.

As described in section B.3, effects from the construction and operation of the proposed pipeline facilities would be relatively minor and would be minimized by implementation of National Fuel's construction plans, its ESCAMP, and our recommendations; therefore, we conclude that additive impact of the Project on vegetation in consideration of other current, proposed, or reasonably foreseeable projects would not be significant.

Fisheries

Cumulative impacts on fisheries and other aquatic resources could occur if other actions take place within the same segment of a waterbody and have similar construction timeframes as the Northern Access 2016 Project or result in permanent or long-term impacts on the same or similar habitat types. The potential effects of the Northern Access 2016 Project on fisheries are described in section B.3, and include increased sedimentation and turbidity; habitat alteration; stream bank erosion; and loss of stream bank and aquatic vegetation, resulting in increasing water temperature. Of the 204 waterbody crossings, National Fuel would implement dry crossing methods (e.g., flume or dam and pump) at 195 crossings and would cross 3 waterbodies by the HDD method to minimize steam impacts. All of the effects would be temporary and limited to the construction and restoration period. Impacts on fisheries during operation of the Northern Access 2016 Project would be negligible and limited to the effects of vegetation maintenance where the right-of-way crosses each waterbody. These could include increased solar radiation and possibly associated water temperature effects. The magnitude of these operational effects would be minor due to the narrow width of the right-of-way. Most of the actions listed in the table in appendix G are located within the same watersheds as the Project and had or could have similar effects as the proposed project on fisheries and other aquatic resources. There is a potential for cumulative impacts if one or more of these projects crosses the same waterbodies or sub-watersheds in the same area and same general timeframe as the proposed Northern Access 2016 Project. While we are not aware of any other planned or proposed actions that would cross waterbodies at the same time and location as the Project, some, particularly those that cross, intersect, or would be co-located with the Project, would affect the same watershed subbasins.

National Fuel proposes measures that would reduce the potential for cumulative impacts. National Fuel would implement mitigation measures outlined in its ESCAMP to minimize impacts on waterbodies during construction and adhere with state erosion control permits. Specific measures would include but are not limited to, maintaining reduced workspace areas near waterbodies, implementing buffers to prevent run-off from entering waterbodies, and installing erosion control devices. Once construction is complete, streambeds and banks would be restored to pre-construction conditions and contours to the maximum extent practicable, which would aid in preventing erosion and minimize long-term impacts on fisheries. The other FERC-regulated and state-regulated actions would be required to implement similar protective measures. As such, these impacts are not expected to be cumulatively significant.

Wildlife

Construction of the proposed project and other current, proposed, or reasonably foreseeable future projects would cause a cumulative impact on wildlife. These cumulative impacts would be most significant if the projects were constructed at or near the same time (including the timeframe for habitat restoration) and within proximity to one another. The primary impact of the construction for the proposed project and other current, proposed, or reasonably foreseeable future projects on wildlife would be short-term due to removal of vegetation habitat and the displacement of wildlife from construction areas.

Construction of the Project would affect a total of 1,206.1 acres of wildlife habitat. Of this, 604.9 acres would be impacted by operation of the Project, and 338.7 acres of upland forest or forested wetland habitat would be converted to open land. Temporary impacts are commonly associated with projects of this type which include but are not limited to impacts on food, cover, and water sources. Construction noise would cause mobile species to avoid areas during construction. Construction activities associated with the Project, combined with the clearing associated with wells and other identified projects within the watershed, could result in cumulative impacts including the removal of vegetation and alteration of wildlife habitat; displacement of wildlife; and other potential secondary effects such as increased population stress, predation, and the establishment of invasive species.

National Fuel would co-locate its Project with its existing rights-of-way for 69 percent of the pipeline alignment (and thus follow existing forest edges) to minimize impacts on wildlife habitat. This routing of the Project generally avoids non-fragmented forest, thereby minimizing the effects of construction-related forest fragmentation and new forest edge effect. Co-location with existing rights-of-way would decrease the impacts associated with undisturbed habitats and vegetation, which would limit the Project's contribution to cumulative impacts on vegetation communities and wildlife habitats, including migratory birds. It is understood that many of the other projects would also be entirely within or adjacent to existing rights-of-way, and most disturbed areas would be allowed to return to pre-existing conditions minimizing long-term impacts.

The effect of workspace clearing on wildlife species that use forest habitats would be greater than on open habitat wildlife species in regard to restoration and growth rate of forested habitat. Operation of the Project would have the greatest impact on wildlife occurring within forested habitat. Approximately 297.4 acres of forest would be permanently converted to open habitat within the permanent easement, which may result in the permanent displacement of certain forest-dwelling species. This would potentially result in the cumulative loss of individuals of small mammal species, amphibians, reptiles, nesting birds, and non-mobile species from these areas. Typical project restoration activities would restore some vegetation cover in the forested areas unless the habitat was removed for structures or impervious surfaces. When restoration has been completed in an area, wildlife would be expected to return to the construction areas and adjacent areas to use the habitat. To minimize impacts, temporary disturbance areas would be revegetated following construction and it is reasonable to assume that other projects subject to environmental reviews or regulatory programs would also be required to do the same.

As described in section B.3, effects from the construction and operation of the proposed project facilities would be minimized by implementation of National Fuel's ESCAMP and our recommendations; therefore, we conclude that cumulative impacts on wildlife with the other projects listed in appendix G would not be significant.

Threatened, Endangered, and Special Status Species

The species described in section B.4 could potentially be affected by construction and operation of other actions occurring within the same area as the Project. National Fuel and the sponsors of all other actions are required to consult with the appropriate federal, state, and local agencies to identify special status species that may be found in the area of the actions; evaluate the potential impacts of their proposed activities on any identified species; and to implement measures to avoid, minimize, or mitigate impacts on special status species and their habitat. To support these consultations, National Fuel has initiated surveys for both federally listed and state-listed species including the:

- northern long-eared bat;
- blue-spotted salamanders;
- stalked bulrush;
- northern harrier;
- burbot;
- federally listed freshwater mussels (i.e., rabbitsfoot mussel, clubshell, and rayed bean mussels);
- state-listed freshwater mussels (i.e., creek heelsplitter, round pigtoe, elktoe, and wavy-rayed lampmussel); and
- state-listed plants (i.e., creeping sedge, false hop sedge, and Schweinitz's sedge).

Because protection of threatened, endangered, and other special status species is part of the federal and state permitting processes, cumulative impacts on such species would be reduced or eliminated through conservation and mitigation measures identified during those relevant permitting processes. Consequently, we conclude that past and present projects in combination with the Northern Access 2016 Project would have minor cumulative effects on threatened, endangered, and other special status species.

d. Land Use, Recreation, Special Interest Areas, and Visual Resources

Land Use

The ROI that was identified for cumulative impacts on land use, recreation, and visual resources includes the area within 10 miles of the project footprint. Of the projects listed in appendix G, 55 were identified within the ROI. The construction and operation of National

Fuel's proposed project and the projects listed in appendix G would result in permanent and temporary cumulative impacts on land use. The Project would be co-located with existing utility corridors for 69 percent of the route. A high degree of co-location has the effect of minimizing forest fragmentation and visual impacts by expanding a current land use rather than introducing a new one in the form of a new utility corridor. However, small privately held properties with two or more rights-of-way on a specific property would result in a cumulative impact from the addition of the Northern Access 2016 Project right-of-way. The Project would be co-located with projects in existing rights-of-way adjacent to the Project and would contribute to the cumulative impacts on private parcels of land within these tracts.

Construction of the Project (pipelines and new and modified aboveground facilities) would affect about 1,206.1 acres of land. The primary land use types affected during construction would be agricultural land (277.4 acres), upland forest (594.9 acres), open land (141.3 acres), developed land (75.1 acres), wetlands (89.4 acres), and shrubland (28.0 acres). The majority of land use impacts associated with the Northern Access 2016 Project would be temporary because most land uses would be allowed to revert to prior uses following construction. However, about 619.0 acres would be permanently encumbered by new permanent easements associated with operation of the Project.

The projects listed in appendix G would disturb hundreds of additional acres of land affecting a variety of land uses. We focused our analysis of potential cumulative land use impacts on projects located close by or immediately adjacent to the proposed construction workspaces. Of the projects listed in appendix G, those with the greatest potential for impacts include the non-jurisdictional project-related facilities, Marcellus Shale development projects, residential developments, and FERC-regulated projects. It is likely that the following projects had the greatest potential to contribute to cumulative land use impact:

- TGP's Northeast Supply Diversification and Ellisburg to Craigs Projects;
- TGP's 300 Line Project;
- National Fuel's Northern Access and Station 230C Projects;
- TGP and National Fuel's Niagara Expansion and Northern Access 2015 Projects;
- National Fuel's Line TNY Replacement Project;
- National Fuel's Line KNY and KM3 Replacement Project;
- National Fuel's Empire North Expansion Project;
- National Fuel KNY 2.43 Mile Replacement Project; and
- National Fuel's Line NM-44 NY and Line U 2015 Replacement Project.

The precise land use effects of the ongoing Marcellus shale development are difficult to discern. It has been estimated that about 9 acres of land is necessary for each natural gas well pad and associated infrastructure (roads, water impoundments, and pipelines) and that an additional 21 acres of indirect edge effects results from each well (Johnson, 2010; USGS, 2012). Based on these assumptions, the development of 118 wells (the number of currently drilled and proposed wells within 0.25 mile of the Project) could affect 1,062 acres of land and have indirect land effects totaling 2,478 acres, the majority of which is probably forested. Information regarding temporary and permanent land disturbances is available in section B.5.

In addition to the projects listed, the ECOsponsible, Inc.'s Niagara River Community Hydro Project, ECOsponsible, Inc.'s Niagara River Community Hydro Project #2, KC Small Hydro LLC's Scoby Dam Hydropower Project, and Empire North Expansion Project are in the planning stage, and identified land use impacts are not currently available. Of the non-FERC jurisdictional projects, there are 7 oil and gas projects, 4 mining projects, 4 electric projects, 7 utility projects, 17 development projects, and 5 transportation projects that are current, proposed, or reasonably foreseeable that could contribute to the cumulative impact on land uses in conjunction with the Northern Access 2016 Project. Most of this effect would be in forested lands where tree clearing would have long-term or permanent effects. The cumulative impact of the Northern Access 2016 Project and other actions on agricultural land and other non-forested land use types would be temporary because most land uses, including those on the permanent right-of-way, would be allowed to revert to prior uses following construction. Additionally, impacts would be minimized or mitigated through the use of resource-specific construction plans (e.g., National Fuel's ESCAMP) and consultation with state and federal agencies and landowners.

Recreation and Special Interest Areas

As described in section B.5, several recreational or other special interest areas would be affected by the Northern Access 2016 Project. The majority of impacts on these recreational and special interest areas would be temporary and limited to the period of active construction, which typically lasts only several days to several weeks in any one area. These impacts would be minimized by implementing National Fuel's ESCAMP (see appendix D). Following construction, most open land uses would revert to their former uses. Longer-term impacts would occur in forested areas because of the time required to restore the woody vegetation to its preconstruction condition. Further, forest land within the new permanent right-of-way would be permanently converted to a more herbaceous state.

Cumulative impacts on these recreational or special interest areas could result if the other foreseeable future actions listed in the table in appendix G affect the same area at the same time as the Project. At present, we are not aware of recreational areas that would be cumulatively affected by the Northern Access 2016 Project and other potential actions. As a result, although the Project would impact recreation and special interest areas, we do not anticipate significant cumulative impacts on these areas.

Visual Resources

The Project would not cross any designated scenic areas. Removal of vegetation and the presence of heavy equipment would create minor impacts on visual resources during active construction. The temporary rights-of-way would be restored to preconstruction contours and allowed to revert to preconstruction uses and cover types after completion of construction. The long-term visual impacts resulting from the widening of existing rights-of-way and creation of a new easement would be permanent but minor. National Fuel would implement visual screening methods on a site-specific basis depending on existing vegetation at each location. A majority of the aboveground facilities would be co-located with existing utility rights-of-way or industrial facilities, and the new aboveground facilities would represent a minor visual alteration that would persist past the construction phase of the Project.

Visual impacts from natural gas development would include maintained rights-of-way for gathering and other pipelines; well pads; compressor station; meter stations; and gas processing facilities. Where aboveground facilities are located in close proximity to the Project, permanent visual impacts would be expected. These impacts would be caused by the gas development itself since aboveground work associated with the proposed project would take place adjacent to existing facilities. Temporary rights-of-way for the Project and other identified projects with natural gas gathering lines would also be allowed to revert to pre-construction conditions. Landscaping and screening is planned for the project's aboveground facilities. Therefore, the Project would be consistent with the landscape that is currently visible from the existing residences and potential viewpoints in the vicinity of the Project. Accordingly, the Project is anticipated to result in minimal or no new adverse effects on these visual resources or visually sensitive areas. Therefore, only minimal or short-term cumulative impacts on visual resources are anticipated in the project area.

e. Socioeconomics

The Project would be located in McKean County, Pennsylvania and Allegany, Cattaraugus, Erie, and Niagara Counties, New York. For the purposes of this EA, socioeconomic impacts were analyzed at the county level. Of the projects included in appendix G, 60 were identified within the ROI for socioeconomic impacts.

The activities associated with these projects would have a range of socioeconomic impacts for the associated counties. While many of the projects occur within the same county, the projects range from zero to 58 miles away from the proposed project, diluting the concentration of socioeconomic impacts. There is limited availability of hotels or motels in the less populated counties of McKean, Allegany, and Cattaraugus; however, it is anticipated that temporary accommodations or rental housing are sufficient to accommodate temporary construction workers from the proposed project and any other listed project(s) that might be concurrent.

The cumulative impact of the Northern Access 2016 Project and the other actions listed in appendix G on infrastructure, traffic, and public services would depend on the number of projects under construction at one time. The small incremental demands of several projects occurring at the same time could strain the ability of some local police, fire, and emergency service departments, particularly in rural areas. This problem would be temporary, occurring only for the duration of construction, and could be mitigated by the various project sponsors providing their own personnel to augment the local capacity or by providing additional funds or training for local personnel. During construction activities, movement of construction equipment and materials as well as commuting of construction workers to the construction site could cause traffic delays. Impacts on local traffic are expected to be short-term and minor, given the rural nature of the majority of the project area, the limited duration of construction, and the movement of construction-related traffic at non-peak travel times. The Group 2-16-STS State Routes Resurfacing Project would occur at MP 17.2 of the proposed project; however, construction activities would be coordinated to minimize impacts and avoid delays. Minimal or no new cumulative impacts are expected when combined with other potential effects associated with road upgrades and improvements. No long-term cumulative effects on infrastructure and public services are anticipated.

New development is likely to result in a limited increase of population, employment, and income within the project area. Project-related activities are expected to have a beneficial effect on the local economy through sales and property tax generation and the consumption of goods and services. Actual employment and income impacts from cumulative development would depend on the success of any developments and the overall rate at which development proceeds. Property tax revenue would depend on the value of the properties, future tax rates, and any tax abatements that may be negotiated. No environmental justice issues have been identified. Impacts on property values as a result of the Project would be negligible. The Project would not have a disproportionately high or adverse human health, socioeconomic, or other environmental effect on minority or low-income communities; therefore, it is not anticipated to represent a significant contribution to cumulative socioeconomic impacts with the other projects in appendix G.

f. Cultural Resources

The ROI for cultural resources is within the direct or indirect APE for the identified cultural resources. The direct APE for archeological resources was defined as the boundaries of the construction workspace (including the pipeline, aboveground facilities, and access roads) for the Project and depth of the trench excavated for the pipeline. The indirect APE for archeological resources is the area that could be affected not only through direct physical impacts, but also from the introduction of visual effects or elements that would alter a property's setting and feeling. For aboveground resources, the direct APE was defined as the of the boundaries construction workspace of the Project (including the pipeline, aboveground facilities, and access roads) and the indirect APE is any area within view of project modifications at existing and proposed new aboveground facilities.

Because of the stationary nature of cultural resources, cumulative impacts would only occur if other projects were to affect the same resources as the proposed project. Impacts could include direct effects associated with ground disturbance and indirect effects on the viewshed that encompasses the areas adjacent to the Northern Access 2016 Project.

Where direct impacts on significant cultural resources are unavoidable, mitigation (e.g., recovery of data and curation of materials) would occur before construction. Non-federal actions would need to comply with any mitigation measures required by the affected states. National Fuel developed project-specific plans to address unanticipated discoveries of cultural resources and human remains in the event they are discovered during construction.

Based on available information for the projects identified in appendix G, there are no projects that are within the ROI that would impact the same potential cultural resources as the Project. Therefore, no cumulative impacts on cultural resources are anticipated in the project area.

g. Air Quality

The ROI for cumulative impacts on air quality is 0.25 mile from the project footprint for construction and 50 kilometers (about 31 miles) from the compressor stations for operations. Construction and operation of the Northern Access 2016 Project would contribute to cumulative air quality impacts in the region.

The combined effect of multiple actions occurring within 0.25 mile of the Project construction footprint and during the same timeframe could temporarily impact air quality in the project area.

Construction of the Project and the actions identified in appendix G are expected to involve the use of heavy equipment that would generate emissions of pollutants such as carbon monoxide, PM_{10} and $PM_{2.5}$, nitrogen oxides, and GHGs. The type and quantity of equipment used would vary from site to site based on the type of facility under construction.

Emissions from pipeline construction would be intermittent and temporary and would not last long at any given location. Construction at the compressor stations would last for several months. The majority of emissions generated during construction would be PM_{10} and $PM_{2.5}$ in the form of fugitive dust that would result from clearing, grading, excavation, and vehicle traffic on paved and unpaved roadways, with exhaust emissions from construction equipment playing a lesser role. Typically, fugitive dust emissions settle quickly near the construction site, which means that fugitive dust emissions would not be cumulative with other projects unless they were very close. National Fuel's implementation of its fugitive dust control plan would help mitigate Project-related fugitive dust effects.

We identified the following projects or existing facilities with the potential to generate air emissions within the 0.25 mile ROI for construction emission impacts. Further details regarding these projects are included in appendix G:

- Empire North Expansion Project is in the planning stage and may impact cumulative air impacts should the construction schedules overlap;
- NFG Midstream Clermont, LLC 24-inch-diameter Pipeline Project;
- potentially the development of Marcellus shale wells and gathering lines in McKean County, Pennsylvania;
- Pennsylvania Electric Company Project;
- Keating Township sewer system project crosses the Project at MP 8.5 and MP 11.9 with an overlapping construction schedule with the Project;
- Beach Meadows Subdivision Project; and
- Group 2-16-STS State Routes Resurfacing Project.

For cumulative construction air impacts to occur, one or more of these projects would have to overlap with the proposed project both geographically and in construction timing. Because pipeline construction moves through an area quickly, the air emissions associated with it would be intermittent and temporary. The majority of impacts would be further minimized because the construction schedules of most of the actions in the table are not expected to overlap with the Northern Access 2016 Project and, even for those that do overlap, it is unlikely that equipment would be operating in close proximity. Consequently, although these actions would result in intermittent and temporary construction air emissions, they are not likely to cumulatively impact either local or regional air quality.

The actions identified in the table in appendix G, including natural gas well development, natural gas gathering lines, and FERC- and non-FERC jurisdictional projects have or would likely result in similar fugitive dust effects. To a lesser extent, this would also likely be the case for the other types of projects in the table in appendix G, including electric transmission line, utility, mining, development, and transportation projects. We expect most of these actions would also implement dust control measures. Due to National Fuel's implementation of its fugitive dust control plan, the likely use of similar dust control measures by the other actions that could be constructed at the same time, and their distance from the Northern Access 2016 Project, we do not anticipate any significant cumulative effects due to fugitive dust.

The combined effect of multiple actions occurring within 50 kilometers of the operation of emission generating aboveground facilities associated with the Project could have a long-term impact on air quality in the project area. Existing or proposed facilities within 50 miles of the emission generating aboveground facilities associated with the Project are included in appendix G. Potentially affected air resources include long-term air pollutant concentrations in ambient air and contribution of the Project's potential GHG emissions to state-wide total annual GHG emissions. New permanent stationary sources of air emissions would be located at the existing Porterville Compressor Station, the proposed Pendleton Compressor Station, the proposed Wheatfield Dehydration Facility, and other facilities along the pipeline (i.e., the 13 new MLVs, 1 storage tank, and 2 emergency generators). The emissions generated by the MLVs, storage tank, and emergency generators would be small and do not require air emission permitting. These facilities are not expected to significantly contribute to air quality impacts in the project area. As previously noted, the operation of the Wheatfield Dehydration Facility would result in minor emissions, and we conclude that it is unlikely to result in significant emission impacts on local air quality nor would the small emissions be likely to add cumulatively with other sources. As such, our cumulative operational air impact analysis is focused on the exiting Porterville and proposed Pendleton Compressor Stations.

The stationary facilities are located within ozone nonattainment areas within the ozone transport region and are subject to stricter NO_x and VOC emission controls by the NYSDEC. The NYSDEC is responsible to ensure that any new minor or major new source permits would minimize emissions to the extent practicable. The emissions would also be incorporated into the inventory for the region's state implementation plan such that the nonattainment area would eventually meet the ozone NAAQS.

Once operational, the air emissions of the proposed Pendleton Compressor Station and the existing Porterville Compressor Station could contribute cumulatively to existing air emissions. The air quality modeling assessment completed for the proposed Pendleton and existing Porterville Compressor Stations and presented in table B.8.a-10 included background air quality measured in the project area. We did not identify any other proposed operational emission sources within the 50-mile ROI. Existing major air pollution sources are identified in appendix G.

The modeling for the Northern Access 2016 Project compressor stations indicate that the conservatively modeled impacts attributable to the compressor stations would remain well below (less than half) of the NAAQS. Given that we have identified no proposed major sources within the ROI and the limited amount of existing facilities in the area, the existing ambient background monitoring data would include existing regional sources. The air impacts, as fully described in table B.8.a-10, would decrease in relation to the distance from the compressor stations. Based on this assessment, the operation of the proposed Pendleton Compressor Station and the existing Porterville Compressor Station, when combined with existing background air quality, would not cause or contributed to a violation of the NAAQS. Therefore, based on the anticipated impacts of the proposed action (as described in section B.8), the Project is not likely to have a significant long-term adverse impact on either local or regional air quality and would not add significantly to a long term cumulative impacts when considered along with other projects.

h. Noise

The ROI for cumulative impacts on noise is 0.25 mile from the Project footprint for construction and for operational noise it is any project that may contribute to noise at an NSA within 1 mile of either compressor station. The proposed project could contribute to noise impacts. However, the impact of noise is highly localized and attenuates quickly as the distance from the noise source increases. Noise impacts associated with the Project would be limited primarily to the period of construction, with exception for noise associated with compressor station and dehydration facility operations.

Seven projects were identified in the 0.25 mile ROI for noise impacts. These projects are listed below. Further details are included in appendix G:

- potential construction of the Empire North Expansion Project (may be ongoing within the cumulative impact radius during construction of the Project);
- NFG Midstream Clermont, LLC 24-Inch Diameter Pipeline Project;
- development of Marcellus shale wells and gathering lines in McKean County, Pennsylvania;
- Pennsylvania Electric Company Project;
- Keating Township sewer system project;
- Beach Meadows Subdivision Project; and
- Group 2-16-STS State Routes Resurfacing Project.

The majority of these projects would be sources of construction noise, but would not be long-term noise generating sources or are existing noise generating sources that currently contribute to background noise in the project area. For cumulative construction noise impacts to occur, one or more of these projects would have to overlap with the proposed project both geographically and in construction timing. Because pipeline construction moves through an area quickly, the construction noise associated with it would be intermittent and temporary. The majority of impacts would be further minimized because the construction schedules of most of the actions in the table are not expected to overlap with the Northern Access 2016 Project and,

even for those that do overlap, it is unlikely that equipment would be operating in close proximity. Consequently, project construction activities are unlikely to contribute to significant cumulative noise impacts.

The Porterville and proposed Pendleton Compressor Stations and proposed Wheatfield Dehydration Facility would be new or modified operational noise generating source with the potential to contribute to cumulative noise impacts. As demonstrated in section B.8, the noise from each compressor station/dehydration facility may be perceptible at some of the nearest NSAs; however, the noise levels would be below FERC's noise criterion of 55 dBA L_{dn}. The projected future noise levels included in section B.8.b include ambient noise, which include any existing natural or man-made sources of noise present when the noise surveys were performed. We should note that near the proposed site of the Pendleton Compressor Station there is a shooting range and a small private airport within 1 mile. It is unclear whether these were operating during the noise survey so the compressor station noise would be cumulative with these existing sources. We did not identify any proposed new sources of operational noise in a 1 mile radius of the Porterville and Pendleton Compressor Stations or the Wheatfield Dehydration Facility. Based on the anticipated impacts of the proposed action, existing sources and no significant cumulative impacts are anticipated on the local noise environment over what is presented section B.8.

i. Climate Change

Climate change is the change in climate over an extended period of time, whether due to natural variability or as a result of human activity, and cannot be represented by single annual events or individual anomalies. For example, a single, large flood event or a particularly hot summer are not indications of climate change. However, a series of floods or warm years that statistically change the average precipitation or temperature over years or decades may indicate climate change.

The Intergovernmental Panel on Climate Change (IPCC) is the leading international, multi-governmental scientific body for the assessment of climate change. The United States is a member of the IPCC and participates in the IPCC working groups to develop reports. The leading U.S. scientific body on climate change is the U.S. Global Change Research Program (USGCRP). Thirteen federal departments and agencies[19] participate in the USGCRP, which began as a presidential initiative in 1989 and was mandated by Congress in the Global Change Research Act of 1990.

The IPCC and USGCRP have recognized that:

- globally, GHGs have been accumulating in the atmosphere since the beginning of the industrial era (circa 1750);
- combustion of fossil fuels (coal, petroleum, and natural gas), combined with agriculture and clearing of forests is primarily responsible for this accumulation of GHG;

[19] The following departments comprise the USGCRP: EPA, U.S. Department of Energy, U.S. Department of Commerce, U.S. Department of Defense, USDA, U.S. Department of the Interior, U.S. Department of State, Pipeline and Hazardous Materials Safety Administration, Department of Health and Human Services, National Aeronautics and Space Administration, National Science Foundation, Smithsonian Institution, and Agency for International Development.

- these anthropogenic GHG emissions are the primary contributing factor to climate change; and
- impacts extend beyond atmospheric climate change alone, and include changes to water resources, transportation, agriculture, ecosystems, and human health.

In May 2014, the USGCRP issued a report, *Climate Change Impacts in the United States*, summarizing the impacts that climate change has already had on the United States and what projected impacts climate change may have in the future (USGCRP, 2014). The report includes a breakdown of overall impacts by resource and impacts described for various regions of the United States. Although climate change is a global concern, for this cumulative analysis, we would focus on the potential cumulative impacts of climate change in the project area.

The USGCRP's report notes the following observations of environmental impacts that may be attributed to climate change in the Northeast region:

- average temperatures have risen about 2 °F between 1895 and 2011 and are projected to increase another 1 to 8 °F over the next several decades with more frequent days above 90 °F;
- areas that currently experience ozone pollution problems are projected to experience an increase in the number of days that fail to meet the federal air quality standards;
- an increase in health risks and costs for vulnerable populations due to projected additional heat stress and poor air quality;
- precipitation has increased by about 5 inches and winter precipitation is projected to increase 5 to 20 percent by the end of the century;
- extreme/heavy precipitation events have increased more than 70 percent between 1958 and 2010 and are projected to continue to increase;
- sea levels have risen about 1 foot since 1900 and are projected to continue increasing 1 to 4 feet by 2100 stressing infrastructure (e.g., communications, energy, transportation, water, and wastewater);
- severe flooding due to heavy downpours is likely to occur more frequently;
- crop damage from intense precipitation events, delays in crop plantings and harvest, and heat stress negatively affect crop yields; invasive weeds are projected to become more aggressive due to their benefit of higher CO_2 levels;
- a change in range, elevation, and intra-annual life cycle events of vegetation and wildlife species; and
- an increase in carrier habitat and human exposure to vector-borne diseases (e.g., Lyme disease, Zika, Chikamunga, or West Nile).

A perspective on the magnitude of a project's GHG emissions can be provided by comparing the project emissions to the project location's regional GHG emissions. Statewide

inventories of GHG emissions are conducted for documentation purposes and follow methodology provided by the EPA. The construction and operational GHG emissions for the Project would occur in Pennsylvania and New York. Pennsylvania completed a GHG inventory in 2005 and determined statewide GHG emissions were 313 million metric tons of CO_{2e}. New York completed a GHG inventory in 2011 and determined statewide GHG emissions were 211 million metric tons of CO_{2e}. The principal GHG in the inventory was CO_2 resulting primarily from fossil fuel combustion used in generated power and transportation. The EPA has calculated that CO_2 emissions accounted for 82 percent of all U.S. emissions in 2012 (EPA, 2016). CH_4, which is a product of natural-gas fuel combustion and fugitive leaks, was determined to be the second most prevalent GHG, accounting for 10 percent of the total U.S. GHG emissions (EPA 2016). Between 1990 and 2012, natural gas and petroleum systems accounted for 29 percent of CH_4 emissions in the United States. The CO_2e of CH_4 and N_2O is calculated by assigning CH_4 a GWP of 25 and N_2O a GWP of 298 (EPA, 2014b). Thus, although the amount of CH_4 being emitted into the atmosphere is significantly less than that of CO_2, the comparative impact of CH_4 on climate change over a 100-year period (that is its GWP) is more than 20 times greater (EPA, 2016).

The GHG emissions associated with construction and operation of the Project were identified in section B.8. Emissions of GHGs from the Northern Access 2016 Project and other regional projects would not have any direct impacts on the environment in the project areas.

However, the proposed net change in CO_{2e} emissions from operation of the Project would be less than 0.1 percent of the year 2005 Pennsylvania and 2011 New York totals. Thus, the GHG emissions from construction and operation of the Project would be minor when compared to the Pennsylvania GHG emission inventory. The contribution from most of the past, present, and reasonably foreseeable actions as identified in the table in appendix G would also be minor in the context of the total GHG emissions. For the major projects included in the table, air permit applications for these projects are required to use the BACT for GHG. Thus, the air permits issued for these major projects would minimize GHG emissions in accordance with current air permitting requirements.

Natural gas is a lower CO_2 emitting fuel when compared to other fuel sources (e.g., fuel oil or coal). Because fuel oil and coal have been and remain widely used as an alternative to natural gas in the region, increased production and distribution of natural gas would likely displace some use of higher carbon emitting fuels. This would result in a potential reduction is regional GHG emissions. Currently, there is no standard methodology to determine how a project's relatively small incremental contribution to GHGs would translate into physical effects on the global environment.

Conclusions on Cumulative Impacts

Cumulative impacts of the Project are anticipated to be minimal or insignificant. This is largely due to the lack of physical proximity to the majority of the projects discussed in appendix G, as well as the implementation of specialized construction techniques and resource protection by National Fuel, as required by applicable state and federal regulatory agencies. A majority of the cumulative impacts identified from other projects in the ROI would also be temporary and minor. When the impacts of the project are added to the existing impacts of the projects listed in appendix G, the cumulative impacts would be minor.

C. ALTERNATIVES

As required by NEPA, FERC policy, and Clean Water Act 404(b)(1) Alternative Analysis, we evaluated alternatives to the Project to determine whether an alternative would be environmentally preferable and/or technically and economically feasible to the proposed action. We evaluated the no-action alternative, system alternatives, route alternatives and variations, and aboveground facility site alternatives. We compared each alternative to the Project using three key criteria.

1. Does the alternative have the ability to meet the objectives of the proposed action?

2. Is the alternative technically and economically feasible and practical?

3. Does the alternative offer a significant environmental advantage over the Project?

With regard to the first criterion and for the purposes of NEPA, National Fuel's stated objective for the Project is to provide transportation of 847,000 dekatherms per day of natural gas capacity to markets or downstream transportation facilities in the northeastern United States and Canada.

It is important to note that not all conceivable alternatives are technically feasible or practical. Some alternatives may be incapable of being implemented due to limits on existing technologies, constraints of system capacities, or logistical considerations, while others may be impractical because sites are unavailable or cannot be developed for the proposed use. Additionally, it is necessary to recognize the environmental advantages and disadvantages of the proposed action in order to focus the analysis on reasonable alternatives with the potential to provide a significant environmental advantage over the Project. Some alternatives may reduce impacts on resources that are not relevant to the analysis or do not provide a significant environmental advantage over the proposed action. Other alternatives may reduce impacts on one resource but increase impacts on others.

Our analysis of each alternative as described in the subsections below is based on information provided by National Fuel; public comments; our review of aerial photographs, USGS topographic maps, and other publicly available information, as well as our independent investigations and our site visits of the project area; and input from cooperating and other agencies. Unless otherwise noted, we used the same desktop sources of information to standardize comparisons between the Project and each alternative. As a result, some of the information presented in this section relative to the Project may differ from information presented in section 2.0, which is based on Project-specific data derived from field surveys and engineered drawings.

National Fuel participated in our pre-filing process, which facilitates early identification of issues and alternatives that could avoid or minimize impacts. During this process, we identified a number of alternatives and design modifications that could address stakeholder concerns and/or avoid or minimize environmental impacts. Many of these changes and modification were adopted by National Fuel and made part of the Project when National Fuel filed its FERC application. The changes and modifications that National Fuel adopted are described in section A.4 and are evaluated as part of the proposed facilities in this EA. Other

alternatives and modifications considered in our analysis are presented in the following subsections. Each of these alternatives was considered until it was clear that the alternative was not reasonable or would result in greater environmental impacts that could not be readily mitigated.

1. No-Action Alternative

If the Commission decides to deny the proposed action, the environmental impacts addressed in this EA would not occur. Under this alternative, National Fuel would not provide natural gas to markets in the northeastern United States and Canada, and the objectives of the Project would not be met. Customers in this region would seek alternate supplies of natural gas or other fuel sources, and other energy companies (including natural gas transmission companies) would likely propose to construct and operate similar facilities. These actions could result in impacts similar to or greater than the Project, and may not meet the proposed timeframes for delivery of additional gas volumes. Therefore, we conclude that the no-action alternative would not meet the objectives of the proposed action and we do not recommend it.

2. System Alternatives

System alternatives would utilize other existing, modified, or proposed facilities to meet the objectives of the proposed action. A system alternative would make it unnecessary to construct all or part of the Project, although modifications or expansion of existing or proposed pipeline systems may be required. We evaluated National Fuel's existing system and determined that sufficient existing capacity is not present to provide the required service to the shipper.

We also evaluated two other existing natural gas pipeline systems in the region (TGP and Dominion Transmission) to determine if they could meet the Project objectives and demonstrate a significant environmental advantage over the proposed action. Both of these systems have a presence in the Marcellus region and interconnect with the TransCanada system, thereby presumably facilitating the required service. However, neither of these existing systems have unsubscribed capacity sufficient to move the incremental firm transportation volumes to meet the objectives of the Northern Access 2016 Project. Although TGP and Dominion Transmission have both completed recent system upgrades to handle additional volumes, either system would require further construction similar or greater to that proposed for the Northern Access 2016 Project to meet project needs. Therefore, we have not identified any suitable system alternatives to the proposed project and have eliminated system alternatives from further consideration.

3. Major Route Alternatives

Major route alternatives deviate from the Project pipeline alignment for significant portions or follow routes substantially different from the proposed alignment, but the origination and delivery points generally remain the same. Major route alternatives are identified to determine if impacts can be avoided or reduced. Major route alternatives also take into account collocation opportunities with other existing or proposed utility corridors.

We evaluated two major route alternatives principally identified by National Fuel as routes that could reduce impacts compared to the proposed alignment, as depicted on figure C.3-1 and summarized in table C.3-1.

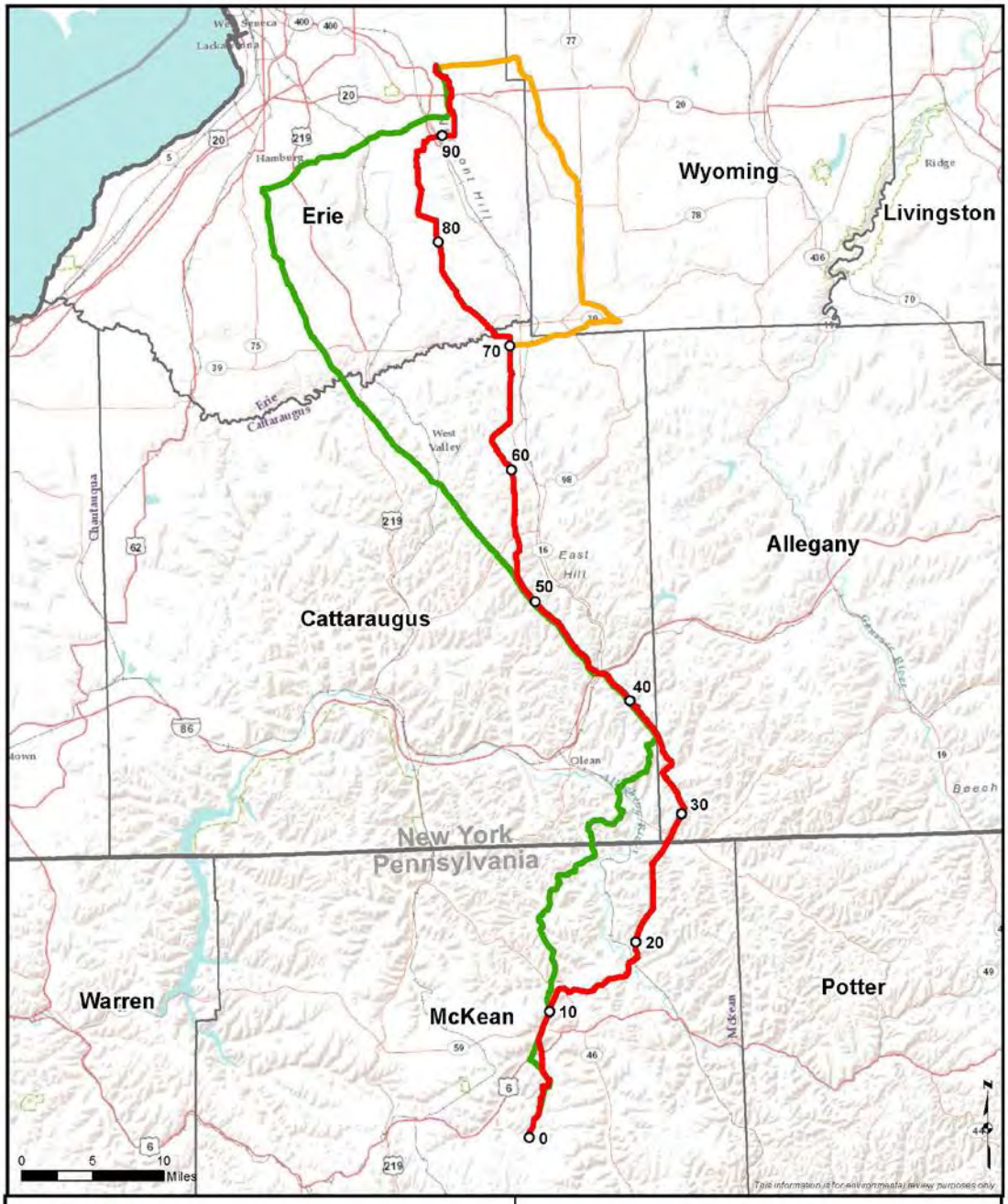

Milepost
Proposed Pipeline
Alternative 1
Alternative 2

Figure C.3-1
Major Route Alternatives
Northern Access 2016 Project
Allegany, Cattaraugus, Erie,
and Niagara Counties, New York

TABLE C.3-1

Major Route Alternative Comparison Table [a]

Category	Alternative 1		Alternative 2	
	Prop.	Alt.	Prop.	Alt.
Route Length (miles)	82.2	91.5	26.9	35.6
Total Land Disturbance (acres)	775.9	831.6	265.3	323.5
Percent Co-located[b] Length (%)	91	71	100	77
Non Co-located Length (miles)	7.7	27.0	0	8.1
Close Proximity Dwellings (100 feet)	12	148	5	63
Forested Land [c] (acres)	474.8	578.3	134.5	143.9
Forested Wetland (acres)	7.9	12.0	5.2	16.3
Total Wetland Impacts (acres)	18.4	22.0	9.4	25.6
Waterbodies Crossed (number) [d]	81	86	16	81

[a] Comparison data are based on available public information and desktop analysis.
[b] Co-located includes routes adjacent to pipelines or overhead electric transmission lines.
[c] Aerial imagery (circa 2013-2015) was used to determine land use for all alternative routes.
[d] Based on NWI, NYSDEC, and PADEP data.
Notes: Prop. = proposed route; Alt. = alternative route

Alternative 1

Alternative Route 1 contains additional greenfield construction compared to the proposed route but utilizes a greater amount of National Fuel's existing Line X system (versus paralleling electrical transmission lines). At approximately MP 10.8, Alternative Route 1 deviates from the proposed route and follow a greenfield route for approximately 26.8 miles until it reconnects with the proposed route near MP 36.4 (figure C.3-1). This alternative again deviates from the proposed route at the intersection of the overhead electrical transmission lines and Line X-South pipeline at approximately MP 52.2. The Alternative Route 1 parallels the existing Line X-South pipeline for approximately 32.1 miles before intersecting with Line X-East, at which point approximately 14.7 miles of the 24-inch-diameter Line X-East would be replaced by a 30-inch-diameter pipeline. Where Line X-East intersects with Line X-North, Alternative Route 1 parallels Line X-North for approximately 4 miles, terminating at the Porterville Compressor Station (MP 96.6).

Although this alternative would maximize paralleling existing National Fuel pipeline systems rather than paralleling electrical transmission right-of-way, Alternative Route 1 presents several disadvantages. As shown in table C.3-1, the primary disadvantages of this alternative are that it is approximately 8.7 miles longer than the proposed route, includes 26.4 miles of greenfield right-of-way development (primarily in the southern portion of the alternative), traverses more densely populated areas (particularly between the towns of East Eden and East Aurora, New York), would impact additional landowners, and would be located within close proximity to schools and businesses on the northern portion of the alternative (as compared to the proposed route, which does not come within 50 feet of any school or business). In addition, the alternative has approximately 10.5 miles of additional forested right-of-way impacts, approximately 3.3 miles of which is hemlock-northern hardwood forest within the Cattaraugus Creek Zoar Valley, west of Springville, New York in the northern portion of the alternative. The NYSDEC has designated Zoar Valley as a Significant Natural Community. This alternative also crosses an additional eight ponds/lakes. Therefore, Alternative Route 1 does not provide an environmental advantage over the proposed route and we do not recommend it.

Alternative 2

Alternative Route 2 utilizes different overhead electrical line rights-of-way and portions of National Fuel's existing system than the proposed route. At approximately MP 69.2 of the proposed route, Alternative Route 2 deviates from the proposed route and parallels an overhead electrical line for approximately 8.1 miles until connecting with National Fuel's existing right-of-way (figure C.3-1). The alternative parallels National Fuel's existing pipeline for approximately 27.4 miles before terminating at the Porterville Compressor Station (MP 96.6).

Alternative Route 2 presents several disadvantages. As shown in table C.3-1, the primary disadvantages of the alternative are that it is approximately 9.1 miles longer than the proposed route, includes 11.3 miles of new right-of-way development, and would impact additional landowners. In addition, the alternative would cross an additional 22 waterbodies and nine ponds/lakes. Therefore, Alternative Route 2 does not present an environmental advantage over the proposed route, and we are not recommending it.

4. Route Variations

Route variations differ from major route alternatives because they are identified to avoid or reduce construction impacts for shorter segments along the proposed route, and specifically considered for localized resource issues. These specific resources issues may include residential or commercial areas, cultural or biological resources, constructability issues, or responses to landowner-specific scoping comments. Because route variations are considered in response to specific issues, they may not always clearly demonstrate a significant environmental advantage other than to reduce impacts on a localized resource.

During pre-filing, National Fuel considered 36 route variations along the originally proposed pipeline route, based on landowner and agency input as well as resources identified during preliminary route design. We considered these route variations, each less than 4 miles long, and National Fuel incorporated many of them into its current proposed route as the variations aid in reducing specific environmental, landowner, or construction constraints without unnecessarily encumbering landowners.

We received comments from several landowners about the original proposed route or variations proposed and/or adopted into the route. We reviewed each comment carefully, considered suggested variations' potential environmental impacts, and determined that the suggested variations or reversions to the original route did not offer considerable benefits and that the current proposed route, which incorporates many but not all landowner suggested variations, adequately minimizes environmental and landowner impacts.

5. Aboveground Facility Alternatives

National Fuel conducted hydraulic modeling to determine horsepower and compression needs to meet the Project's objectives. This modeling determined that additional compression would be needed at the existing Porterville Compression Station, and due to the presence of the existing infrastructure that would allow additional compression to be added onsite, we did not evaluate alternative sites for this facility.

The TGP Interconnect M&R Station would be located in the Town of Wales, Erie County, New York. The M&R station is located at the crossing of the pipeline and the existing TGP 200 Line. Optimal siting of this facility is dependent upon close proximity to this intersection. Due to the limited range for this facility's siting, and because there have been no significant environmental constraints identified at this location, an alternatives analysis is unwarranted.

Based on hydraulic modeling, National Fuel determined that compression would be required along National Fuel's existing XM-10 pipeline in Niagara County in order to increase the pressure of gas before delivering it into the Empire pipeline system; leading to the proposed Pendleton Compressor Station. In addition, National Fuel determined that a new dehydration facility would be required to remove water vapor from the natural gas stream needed upstream of Empire's interconnection with TransCanada. Accordingly, National Fuel proposed the Wheatfield Dehydration Facility, which would take gas that already meets U.S. standards for natural gas pipeline moisture content and allow it to meet the differing Canadian gas quality standards. FERC engineering staff reviewed National Fuel's hydraulic modeling and related flow diagrams and confirmed that both facilities would be required to fulfill the Project's objectives.

We received numerous comments regarding the proposed and alternative sites for the Pendleton Compressor Station and the Wheatfield Dehydration Facility. Specifically, commenters objected to the originally proposed compressor station site along Aiken Road (Alternative Site #1, below), expressing concerns related to noise, air quality, safety, improper zoning, and other environmental impacts. In response to the landowner's public expression of unwillingness to sell the property, National Fuel proposed a new site for the Pendleton Compressor Station (i.e., the location on Killian Road, which is analyzed in section B of this EA) and identified additional alternatives for the station. Commenters also objected to the proposed site stating similar concerns that were raised on the Alternative Site #1 location. Our analysis of alternative sites is presented below.

Pendleton Compressor Station

National Fuel conducted an initial evaluation of the XM-10 pipeline area to identify possible sites for the compressor station that would meet the Project's technical and commercial requirements while minimizing environmental impacts. For example, a site of at least 10 acres is necessary and preferably 30 acres in order to provide a spatial buffer against outside development and future encroachment and to reduce visual and aesthetic impacts and increase the distance of the station from NSAs. Engineering constraints related to the hydraulics of natural gas transmission dictated the range of potential sites along the existing National Fuel system and we considered how alternatives could accommodate certain engineering constraints and the Project's objectives.

The proposed Pendleton Compressor Station site is comprised of 20 acres of primarily farm fields, with a small portion of forest and shrub land. For this site, Empire would construct an approximately 2.1-mile-long, 16-inch- and 24-inch-diameter pipeline (which would become part of its Line EMP-03 after construction). The 16-inch-diameter outgoing pipeline is necessary to connect the compressor station to the XM-10 pipeline; the 24-inch-diameter source pipeline would connect the X-North pipeline to the compressor station. This site is zoned Light Industrial and permits essential services, such as the proposed natural gas infrastructure. This site is approximately 1,300 feet from the nearest NSA and has 75 parcels with houses within 0.5 mile. This site avoids construction/pipeline replacement along the Frontier Chemical hazardous waste site, addressing a concern expressed by numerous commenters (see Alternative Site #1 below).

Commenters expressed concern with the proposed location of the Pendleton Compressor Station as well as other nearby alternative sites. Commenter concerns included health implications from facility emissions, especially to children and the proximity to Star Point school; safety concerns about the nearby shooting range; station noise disrupting the area's tranquility; vibrations from the compressors affecting home foundations; impacts on pollinators; impacts on wetlands; site flooding; local emergency response team limitations; safety risks of an unmanned site; aesthetics of the facility in a residential area; property devaluation; and improper local zoning to allow a compressor station. These concerns are discussed in our respective resource evaluations in section B.

Other preliminary sites identified by National Fuel in its environmental resource report filed with the Commission did not warrant further investigation as the sites were more severely constrained for space or had considerable additional resource impacts, including proximity to residences, wetland impacts, and forest clearing. However, we did receive specific comments identifying two additional alternative sites for the Pendleton Compressor Station: a site adjacent to an existing compressor station in the Town of Cambria and a site in the Town of Wheatfield, both in Niagara County. We have included these two sites ("Alternative Site #2" and "Alternative Site #3") in our evaluation of alternatives. The alternative compressor station sites are summarized in table C.5-1 and depicted in figures C.5-1 through C.5-3.

TABLE C.5-1

Comparison of Pendleton Compressor Station Site Alternatives

Siting Criteria	Unit	Proposed Site	Alternative Site 1	Alternative Site 2	Alternative Site 3
Size of Site	acres	20	40	>10	20
Contiguous Developable Upland Area	acres	18.7	29	unknown	6
Parcel Available for Purchase	yes/no	yes	yes	unknown	yes
Existing Land Use	type	Agricultural	Idle agricultural	Forest, open	Forest, open
Zoning	type	Light Industrial	R2- Residential	Industrial	M-1, Industrial-1
Related natural gas pipeline required	miles	2.1	3.1	7.6[a]	3.3
Wetlands on site	acres	1.3	9.6	0.8	14.0[b]
Waterbody Crossings by Associated Pipeline	number	2	3	5	2
Potential for Flooding[c]	n/a	Low – site outside of FEMA 100 year floodplain	Low – site outside of FEMA 100 year floodplain	Low – majority of site outside of FEMA 100 year floodplain	Low – majority of site outside of FEMA 100 year floodplain
Estimated Access driveway length	feet	800	1,150 – 2,680	1,300	400
Distance to nearest NSA	feet	1,300	830	840	2,450
Access to public roads and availability of electrical power	n/a	Good	Good	Good	Good
Number of parcels with houses (within 0.5 mile)[d]	number	75	80	6	390
Topography suitable	yes/no	yes	yes	yes	yes
Prime Farmland	acres	20	39	0	0
Potential to affect endangered or threatened species, or other sensitive wildlife or fisheries	n/a	Within potential northern long-eared bat range	Within potential northern long-eared bat range	Within potential northern long-eared bat range	Within potential northern long-eared bat range

[a] The length of the pipeline required is 7.6 miles. Approximately 3.6 miles of pipeline would also be required returning from Alternative Site #2 back to the Empire mainline. This additional pipeline would be constructed within an expanded right-of-way, offset 25 feet from the pipeline going into Alternative Site #2.

[b] Only the southern 10 acres of the Wheatfield site were surveyed, of which 4 acres were delineated as wetlands. Publicly available data illustrate all 10 acres of the northern portion of the site as forested and freshwater emergent wetlands.

[c] Data Source: NYSDEC Environmental Resource Mapper.

[d] Number of parcels with houses within 0.5 mile was calculated using Niagara County parcel data for parcels in this radius that included data in the field "Year Built." Note: This methodology differs from actual house count (32 houses) within 0.5 mile of the compressor station that was utilized for other public disclosures related to the proposed site.

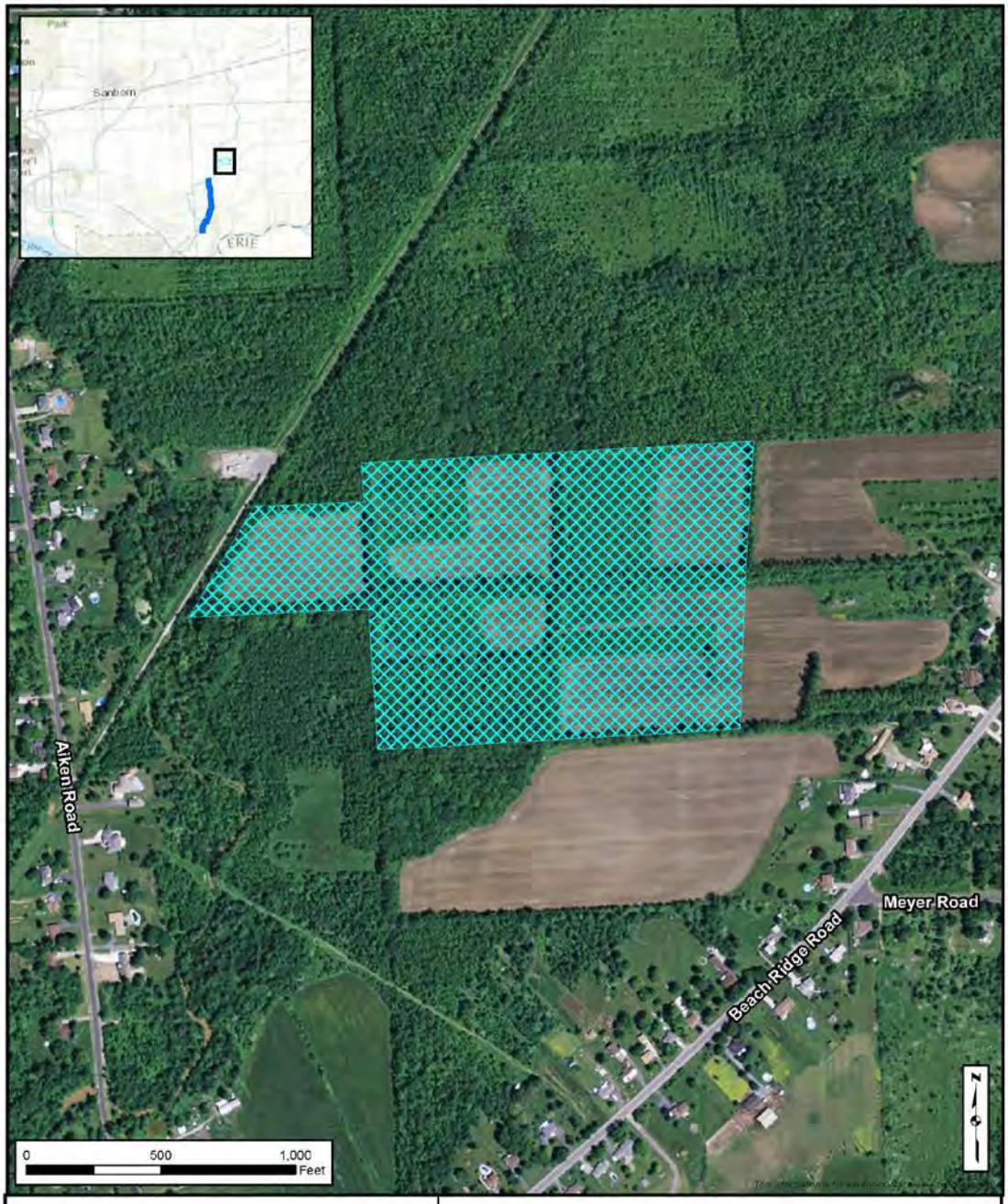

Approximate Compressor Station Alternative Location

Figure C.5-1
Compressor Station Alternative Site #1
Northern Access 2016 Project
Niagara County, New York

Approximate Compressor Station Alternative Location

Figure C.5-2
Compressor Station Alternative Site #2
Northern Access 2016 Project
Niagara County, New York

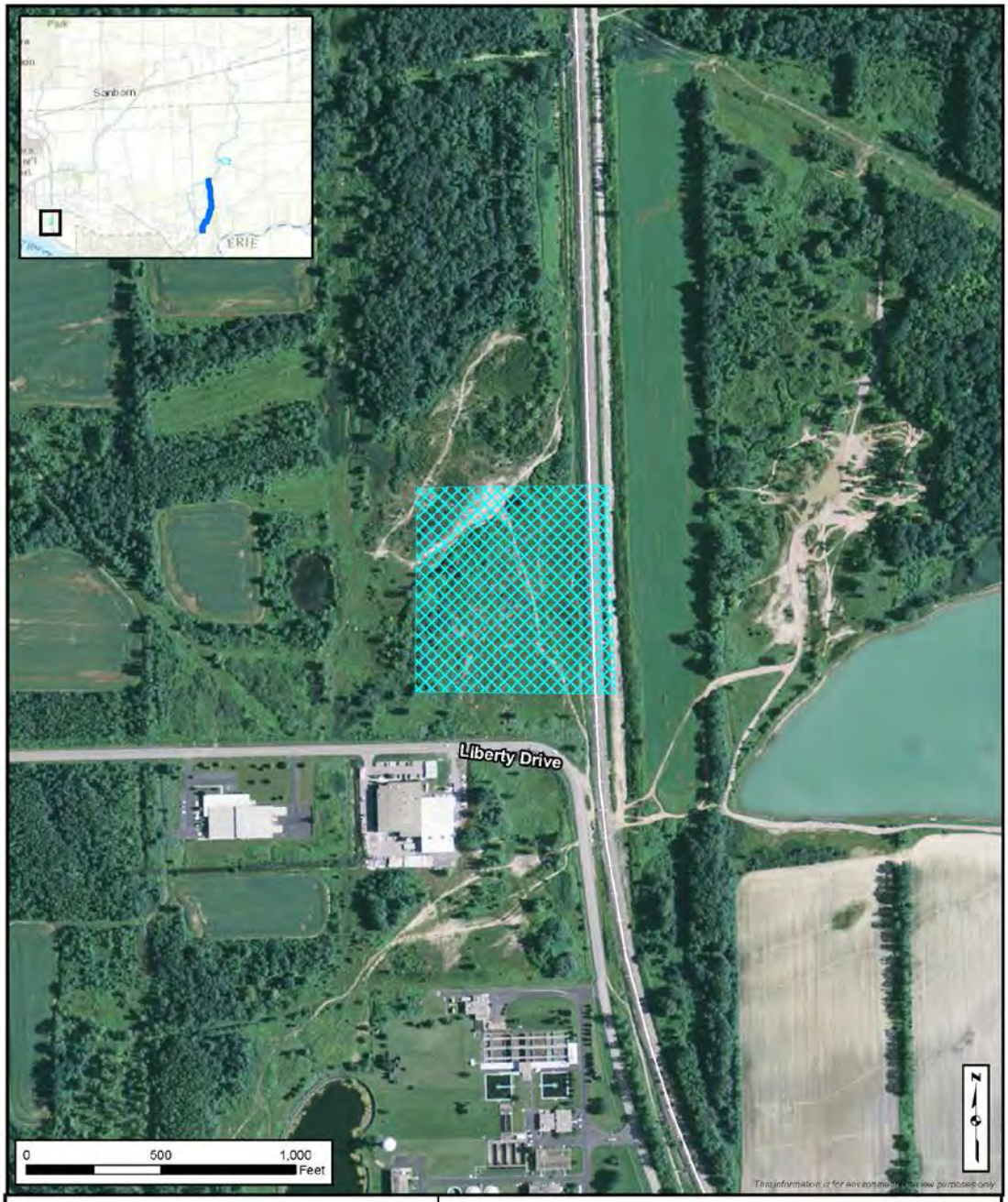

Approximate Compressor Station Alternative Location

Figure C.5-3
Compressor Station Alternative Site #3
Northern Access 2016 Project
Niagara County, New York

Alternative Site #1

Alternative Site #1 is the site that was originally proposed for the Pendleton Compressor Station in National Fuel's application filed in March 2015. This property is 40 acres of a combination of farm fields, reverting farm fields, shrub land, and forest. Approximately 9.6 acres of the site are wetlands. Although adjacent to Empire's existing XM-10 line, 3.05 miles of 16-inch-diameter pipeline would need to be replaced with new 24-inch-diameter pipeline. This 3.05-mile replacement pipeline is adjacent to the Frontier Chemical hazardous waste site, which was a concern for numerous commenters. This site is approximately 830 feet from the nearest NSA (the closest of the four sites evaluated) and has 80 parcels with houses within 0.5 mile. This site is zoned R-2 residential and would impact a greater amount of wetlands, including those that provide habitat for the chorus frog (a species of concern to the NYSDEC). Additionally, the landowner was publically adamant that the site was not available for purchase. Although rights of eminent domain are provided with a Certificate, we endeavor to avoid siting aboveground facilities on parcels requiring use of eminent domain.

Alternative Site #2

In response to various community stakeholder comments, we considered the feasibility of a potential site for the compressor station near an existing compressor station in the Town of Cambria, Niagara County. The primary benefit of this alternative site is its collocation with the existing Lockport Junction Compressor Station. This existing compressor station is functionally independent and connected to an independent pipeline system (with different downstream connectivity) and already operates at capacity and at lower operating pressure. At least 20 acres would be necessary for construction, and approximately 8 acres would be permanently developed for operation of this alternative site.

The area shown on figure C.5-2 represents National Fuel's suggested boundaries for Alternative Site #2. This area is limited to less than 5 acres. However, the property near the existing Lockport Compressor Station consists of approximately 25 acres (open land, agriculture, and forest) with more than 10 acres of open land immediately adjacent to the existing facility. Less than 1 acre of this site is wetland. The land use is zoned industrial. This smaller alternative site is approximately 840 feet from the nearest NSA and has six parcels with houses (the fewest of the four sites evaluated) within 0.5 mile. The alternative site, however, is closer to the nearest NSA than the existing compressor station facility.

Of the alternatives that we evaluated, this alternative is the furthest from Empire and National Fuel's existing pipeline systems, to which the compressor station must connect to meet the Project objectives. Alternative Site #2 would require additional pipeline facilities to connect the compressor station to National Fuel's existing Line X and Empire's mainline pipeline. We analyzed the necessary additional pipe required for this alternative and determined that it would necessitate a 24-inch-diameter pipeline routed northerly from National Fuel's existing Line X to Alternative Site #2. Specifically, approximately 3.9 miles of the pipeline route for Alternative Site #2 would consist of Empire's replacement of the entire existing Line XM-10 16-inch-diameter pipeline (from Line X-North to the Empire mainline) with a new 24-inch-diameter pipeline to accommodate the required flowrate at the Line X-North pressure. This replacement pipeline could be constructed using existing pipeline right-of-way. Additionally, we estimate

that 3.6 miles of new 24-inch-diameter pipeline north of the Empire mainline would be required to connect to the northern terminus of the new pipeline (Line EMP-03) to Alternative Site #2. The entire length of new 24-inch-diameter pipeline required to provide natural gas to the compressor station (from the southern terminus of existing Line XM-10 to the Alternative Site #2) would be 7.6 miles. The new pipeline required from Alternative Site #2 back to the Empire mainline would be approximately 3.6 miles. This return pipeline would utilize the same right-of-way as the northern end of the pipeline going to Alternative Site #2 (resulting in a double pipeline right-of-way), 25 feet offset from the pipeline going to Alternative Site #2.

This 7.6-mile pipeline right-of-way would use an existing pipeline and abandoned railroad corridor, but would need to be expanded in width onto adjoining properties along the pipeline right-of-way to accommodate the two new pipelines. The railroad right-of-way is currently used by two separate brine lines and other utilities. The 24-inch-diameter pipeline would be offset a distance of 25 feet from existing utilities, with the 16-inch-diameter pipeline offset an additional 25 feet. The majority of the route would be located in agricultural land and would require a standard 100 feet typical construction right-of-way to accommodate two transmission pipelines in the right-of-way, plus typically an additional 25 feet of additional temporary workspace for agricultural mitigation techniques.

Our evaluation demonstrates certain advantages to Alternative Site #2. Specifically, the majority of the additional pipeline length would be in agricultural land and within or adjacent to an abandoned railroad grade; it has the fewest parcels with houses within 0.5 mile; and would result in the least amount of wetland impact. Although forestland is identified in the general project footprint, it is likely that the compressor station footprint could be designed to minimize tree clearing; however, avoidance of all tree clearing is unlikely. Similarly, the distance from the nearest NSA could likely be increased depending on project footprint location and tree cover could be retained to aid in noise amelioration. As previously mentioned, a new compressor station at this alternative site would be closer to the nearest NSA than the existing and adjacent compressor station. Despite these advantages, Alternate Site #2 would add a considerable length of new pipeline right-of-way (approximately 5.5 miles more than the pipeline required for the proposed site). The additional acreage of impact associated with the right-of-way offsets described above would add approximately 78.2 acres of disturbance to the Project. Based on review of aerial photographs and NWI maps, it appears that several areas along the required pipeline for Alternative Site #2 would be located within wetlands, some of which is likely forested wetland. This pipeline route is also in close proximity to residential subdivisions and the Frontier Chemical site. Additionally, it is unknown if the parcel could be purchased for the proposed compressor station. Further, the pipeline would cross more than 50 additional properties and newly impacted landowners along the northern portion of the route. Lastly, the existing Tennessee Gas Pipeline that is associated with the existing compressor station bisects the open land being considered as Alternative Site #2, significantly encumbering that land.

Alternative Site #3

In response to several commenters, we evaluated the potential to site the compressor station on the same parcel as the proposed Wheatfield Dehydration Facility site in the Town of Wheatfield, Niagara County. This property is 20 acres of primarily forest and open land. Approximately 14 acres of this site are wetland. The land use for the alternative site is zoned

M-1 industrial. This site is approximately 2,450 feet (the farthest of the four sites evaluated) from the nearest NSA but has 390 parcels with houses (by far the most of the four sites evaluated) within 0.5 mile.

Alternative Site #3 would require approximately 3.3 miles of additional pipeline to connect National Fuel's Line X-North to the Wheatfield alternative site. This pipeline would be necessary to transport low pressure gas (before the compressor station) to the station, where the pressure would be increased before being inserted (via short discharge pipeline from the dehydration facility) into the Empire mainline. This additional pipeline would initiate at National Fuel's existing Nash Road Meter and Regulator Station at Line X-North, located approximately 630 feet east of Nash Road in the Town of North Tonawanda, Niagara County. The pipeline would then extend westward to collocate adjacent to the existing National Grid power line corridor. The pipeline would abut a 75-foot-wide right-of-way that contains two high voltage aboveground power lines that are 25 feet apart, in addition to two brine pipelines located between the power lines, and a third line outboard of the powerlines.

The area surrounding this existing right-of-way is heavily populated; and where it is undeveloped, forested wetlands are prevalent. Assuming a 75-foot-wide construction right-of-way for construction of the pipeline, approximately 17 acres of National Wetland Inventory (NWI) wetlands would be crossed, the majority of which are forested. Although forestland is identified in the general project footprint, it is possible that the compressor station footprint could be designed to avoid tree clearing. In a proposed 50-foot-wide permanent right-of-way of approximately 20 acres, over half of the acreage impacted is wetlands (approximately 12 acres). The route may also be constrained by recent and past development.

Pendleton Compressor Station Conclusions

We conclude that Alternative Site #1 offers no environmental advantages over the proposed site, and we do not recommend it.

Alternative Site #2 would result in additional length of pipeline, numerous newly affected landowners, additional environmental impacts due to an additional 78.2 acres of disturbance, and likely engineering difficulties given the existing pipeline infrastructure on the parcel. Based on these environmental factors and our conclusion that the proposed site is the most efficient location from an engineering standpoint we conclude that this site does not present an overall significant environmental advantage to the proposed site and we are not recommending Alternative Site #2.

The pipeline route associated with Alternative Site #3 may potentially be constructible, but there would be major concerns as to safety, noise, and timing based on workspace limitations and allowable working hours. Additionally, there would be considerable incremental environmental impacts, particularly with respect to forested wetlands. National Fuel surveyed approximately half of the 20-acre site for the purpose of siting the dehydration facility. Within the survey area of approximately 10 acres, 4 acres are wetland. Therefore, we conclude that there is not adequate upland acreage at the Wheatfield (Alternative Site #3) site to locate both the proposed dehydration facility and the compressor station outside of delineated wetlands.

Although Alternative Site #3 is zoned industrial, would require a short access road, and is the farthest distance from the nearest NSA, it would require permanent wetland fill and has the greatest number of parcels with houses within 0.5 mile. The associated pipeline route also presents issues. Therefore, we conclude that Alternative Site #3 does not present an environmental advantage to the proposed site. Thus, we do not recommend it.

The proposed Pendleton Compressor Station site is comprised of 20 acres of primarily farm fields and is zoned Light Industrial, which permits essential services, such as the proposed natural gas infrastructure. This site is approximately 1,300 feet from the nearest NSA and avoids construction/pipeline replacement along the Frontier Chemical hazardous waste site. As discussed in section B, National Fuel has proposed mitigation to minimize visual impacts, maintain compliance with air quality standards, and reduce facility noise below our noise limit standards. The proposed site would be the most efficient from an engineering standpoint and the landowner has agreed to sell the property to National Fuel. Based on the environmental, engineering, and acquisition potential of this site, we determined that the alternatives considered do not offer a significant environmental advantage over the proposed site and are not preferable to the proposed action.

Wheatfield Dehydration Facility

We conducted an evaluation of possible site locations applying similar site selection criteria used during the compressor station evaluation process with the goal of identifying dehydration facility sites that would meet the Project's technical and commercial requirements while minimizing environmental impacts. There would be two streams of gas dried at the proposed facility: gas flowing east to west on Empire's mainline, which gets compressed at the Oakfield Compressor Station, and gas flowing into the Empire mainline through the proposed Pendleton Compressor Station. As performance of dehydration facilities is improved with warmer gas temperatures and because gas temperature falls with distance from compression, siting dehydration facilities nearer compression facilities is generally preferable.

The proposed Wheatfield Dehydration Facility site is comprised of 40 acres, about 18 of which is developable upland area, most of which is vacant open land. Much of the remainder of the site is wetland. This site is adjacent to the existing Empire mainline system; therefore not requiring any new pipeline construction.[20] The site is zoned M-1 Industrial which permits facilities such as the proposed natural gas infrastructure. This site is approximately 2,000 feet from the nearest NSA and has 390 parcels with houses within 0.5 mile.

Commenters expressed concern with the proposed location of the dehydration facility, primarily commenting on potential health implications from facility emissions; facility noise disrupting the area's tranquility; vibrations from the adjacent railroad tracks affecting the pipeline and facility; impacts on wetlands; stability of site soils; and property devaluation. The majority of these concerns are discussed in the resource discussions in section B.

[20] Siting the compressor station at this location would require 3.3 miles of new pipeline to move the low pressure gas from Line XM-10 to the compressor station, where pressure would be increased before transferring the gas into the Empire mainline. Because the Empire mainline is adjacent to the proposed dehydration facility, if the Pendleton Compressor Station is built, the higher pressure gas would be inserted into the Empire mainline near that location and transported to the dehydration facility through the existing mainline.

Several commenters requested that the dehydration facility be placed on Grand Island or in Canada. However, by increasing the distance between the dehydration facility and compressor stations by an additional 10 miles, gas can cool and limit the operating performance of the dehydration facility without providing observable environmental benefit. Therefore, we determined that analysis of alternative sites on Grand Island is not warranted.

Commenters also requested that the dehydration facility be constructed in Canada given that the need for drier gas is prompted by differing Canadian gas standards concerning pipeline moisture content. Placement of the dehydration facility in Canada is outside of FERC's authority and review responsibilities. Further, if the Commission determines that the Project purpose and need, as proposed, is valid and natural gas is required to enter the interstate gas system with less moisture than is found in the proposed transmission line, the facility is considered required for the Project and would need to be placed within the area under FERC's jurisdiction (i.e., within the United States).

Commenters also provided suggestions about the use of alternative methods for dehydration primarily in an effort to limit emissions. Specifically, commenters discussed methanol injection and dessicant dehydration systems as possible options. Methanol injection does not apply as it is not a dehydration process. Dessicant systems are better suited to low volume gas streams or within facility systems rather than large volume pipelines similar to the proposed project and therefore would not be feasible.

National Fuel originally proposed a site for the dehydration facility near the eastern edge of the Niagara Falls International Airport. This property is approximately 50.8 acres of upland agricultural land. As an entirely upland site, this site is advantageous over the proposed site. However, during the initial evaluation of this site, the Niagara Falls Air Reserve Station, located on the Niagara Falls International Airport to the west of this alternative site, raised safety concerns over a natural gas facility being sited within close proximity to the station's runway. This was deemed a fatal flaw for the original site. This required National Fuel to identify an alternative site. The site identified is now considered the proposed site.

The original proposed site has fewer residences within proximity to the site than the current proposed site. However, as stated in section B.8, we do not anticipate air quality or noise impacts from the dehydration facility; therefore, residences proximate to either location would not be affected by the facility. Review of other factors for the two sites (e.g., existing land use, zoning, public road access, etc.) show the sites to be generally comparable. Although the alternative site may be equivalent to the proposed site, given the concerns raised by the Niagara Falls Air Reserve Station, we determined that the proposed site is suitable for the proposed dehydration facility site.

D. CONCLUSIONS AND RECOMMENDATIONS

Based on the analysis contained within this EA, we have determined that if National Fuel constructs and operates the proposed facilities in accordance with its application and supplements and our recommended mitigation measures, approval of this proposal would not constitute a major federal action significantly affecting the quality of the human environment. We recommend that the Order contain a finding of no significant impact and include the following mitigation measures listed below as conditions to any Certificate the Commission may issue.

1. National Fuel shall follow the construction procedures and mitigation measures described in its applications and supplements (including responses to staff data requests) and as identified in the EA, unless modified by the Order. National Fuel must:

    a. request any modification to these procedures, measures, or conditions in a filing with the Secretary;

    b. justify each modification relative to site-specific conditions;

    c. explain how that modification provides an equal or greater level of environmental protection than the original measure; and

    d. receive approval in writing from the Director of OEP **before using that modification**.

2. The Director of OEP has delegated authority to take whatever steps are necessary to ensure the protection of all environmental resources during construction and operation of the Project. This authority shall allow:

    a. the modification of conditions of the Order; and

    b. the design and implementation of any additional measures deemed necessary (including stop-work authority) to assure continued compliance with the intent of the environmental conditions as well as the avoidance or mitigation of adverse environmental impact resulting from project construction and operation.

3. **Prior to any construction**, National Fuel shall file an affirmative statement with the Secretary, certified by a senior company official, that all company personnel, EIs, and contractor personnel will be informed of the EI's authority and have been or will be trained on the implementation of the environmental mitigation measures appropriate to their jobs before becoming involved with construction and restoration activities.

4. The authorized facility location(s) shall be as shown in the EA, as supplemented by filed alignment sheets, and shall include all of the staff's recommended facility locations identified in section A of the EA. **As soon as they are available, and before the start of construction**, National Fuel shall file with the Secretary any revised detailed survey alignment maps/sheets at a scale not smaller than 1:6,000 with station positions for all facilities approved by the Order. All requests for modifications of environmental conditions of the Order or site-specific clearances must be written and must reference locations designated on these alignment maps/sheets.

National Fuel's exercise of eminent domain authority granted under NGA Section 7(h) in any condemnation proceedings related to the Order must be consistent with these authorized facilities and locations. National Fuel's right of eminent domain granted under NGA Section 7(h) does not authorize it to increase the size of its natural gas pipeline or facilities to accommodate future needs or to acquire a right-of-way for a pipeline to transport a commodity other than natural gas.

5. National Fuel shall file with the Secretary detailed alignment maps/sheets and aerial photographs at a scale not smaller than 1:6,000 identifying all route realignments or facility relocations, and staging areas, pipe storage yards, new access roads, and other areas that would be used or disturbed and have not been previously identified in filings with the Secretary. Approval for each of these areas must be explicitly requested in writing. For each area, the request must include a description of the existing land use/cover type, documentation of landowner approval, whether any cultural resources or federally listed threatened or endangered species would be affected, and whether any other environmentally sensitive areas are within or abutting the area. All areas shall be clearly identified on the maps/sheets/aerial photographs. Each area must be approved in writing by the Director of OEP **before construction in or near that area.**

   This requirement does not apply to extra workspace allowed by the National Fuel's ESCAMP and/or minor field realignments per landowner needs and requirements which do not affect other landowners or sensitive environmental areas such as wetlands.

   Examples of alterations requiring approval include all route realignments and facility location changes resulting from:

   a. implementation of cultural resources mitigation measures;

   b. implementation of endangered, threatened, or special concern species mitigation measures;

   c. recommendations by state regulatory authorities; and

   d. agreements with individual landowners that affect other landowners or could affect sensitive environmental areas.

6. **Within 60 days of the acceptance of the authorization and before construction begins**, National Fuel shall file an Implementation Plan with the Secretary for review and written approval by the Director of OEP. National Fuel must file revisions to the plan as schedules change. The plan shall identify:

   a. how National Fuel will implement the construction procedures and mitigation measures described in its application and supplements (including responses to staff data requests), identified in the EA, and required by the Order;

   b. how National Fuel will incorporate these requirements into the contract bid documents, construction contracts (especially penalty clauses and specifications), and construction drawings so that the mitigation required at each site is clear to onsite construction and inspection personnel;

c. the number of EIs assigned (per spread), and how the company will ensure that sufficient personnel are available to implement the environmental mitigation;

d. company personnel, including EIs and contractors, who will receive copies of the appropriate material;

e. the location and dates of the environmental compliance training and instructions National Fuel will give to all personnel involved with construction and restoration initial and refresher training as the Project progresses and personnel change.

f. the company personnel (if known) and specific portion of National Fuel's organization having responsibility for compliance;

g. the procedures (including use of contract penalties) National Fuel will follow if noncompliance occurs; and

h. for each discrete facility, a Gantt or PERT chart (or similar project scheduling diagram), and dates for:

(1) the completion of all required surveys and reports;
(2) the environmental compliance training of onsite personnel;
(3) the start of construction; and
(4) the start and completion of restoration.

7. National Fuel shall employ at least one EI per construction spread. The EI(s) shall be:

a. responsible for monitoring and ensuring compliance with all mitigation measures required by the Order and other grants, permits, certificates, or other authorizing documents;

b. responsible for evaluating the construction contractor's implementation of the environmental mitigation measures required in the contract and any other authorizing document;

c. empowered to order correction of acts that violate the environmental conditions of the Order, and any other authorizing document;

d. a full-time position, separate from all other activity inspectors;

e. responsible for documenting compliance with the environmental conditions of the Order, as well as any environmental conditions/permit requirements imposed by other federal, state, or local agencies; and

f. responsible for maintaining status reports.

8. Beginning with the filing of its Implementation Plan, National Fuel shall file updated status reports with the Secretary **on a biweekly basis until all construction and restoration activities are complete.** On request, these status reports will also be

provided to other federal and state agencies with permitting responsibilities. Status reports shall include:

a. an update on National Fuel's efforts to obtain the necessary federal authorizations;

b. the construction status of the Project, work planned for the following reporting period, and any schedule changes for stream crossings or work in other environmentally-sensitive areas;

c. a listing of all problems encountered and each instance of noncompliance observed by the EI(s) during the reporting period (both for the conditions imposed by the Commission and any environmental conditions/permit requirements imposed by other federal, state, or local agencies);

d. a description of the corrective actions implemented in response to all instances of noncompliance, and their cost;

e. the effectiveness of all corrective actions implemented;

f. a description of any landowner/resident complaints which may relate to compliance with the requirements of the Order, and the measures taken to satisfy their concerns; and

g. copies of any correspondence received by National Fuel from other federal, state, or local permitting agencies concerning instances of noncompliance, and National Fuel's response.

9. National Fuel shall develop and implement an environmental complaint resolution procedure. The procedure shall provide landowners with clear and simple directions for identifying and resolving their environmental mitigation problems/concerns during construction of the project and restoration of the right-of-way. **Prior to construction**, National Fuel shall mail the complaint procedures to each landowner whose property would be crossed by the project.

a. In its letter to affected landowners, National Fuel shall:

(1) provide a local contact that the landowners should call first with their concerns; the letter should indicate how soon a landowner should expect a response;

(2) instruct the landowners that if they are not satisfied with the response, they should call National Fuel's Hotline; the letter should indicate how soon to expect a response; and

(3) instruct the landowners that if they are still not satisfied with the response from National Fuel's Hotline, they should contact the Commission's Landowner Helpline at 877-337-2237 or at LandownerHelp@ferc.gov.

b. In addition, National Fuel shall include in its biweekly status report a copy of a table that contains the following information for each problem/concern:

(1) the identity of the caller and date of the call;

(2) the location by milepost and identification number from the authorized alignment sheet(s) of the affected property;

(3) a description of the problem/concern; and

(4) an explanation of how and when the problem was resolved, will be resolved, or why it has not been resolved.

10. **Prior to receiving written authorization from the Director of OEP to commence construction of any project facilities**, National Fuel shall file with the Secretary documentation that it has received all applicable authorizations required under federal law (or evidence of waiver thereof).

11. National Fuel must receive written authorization from the Director of OEP **before placing the Project into service.** Such authorization will only be granted following a determination that rehabilitation and restoration of the right-of-way and other areas affected by the Project are proceeding satisfactorily.

12. **Within 30 days of placing the authorized facilities in service,** National Fuel shall file an affirmative statement with the Secretary, certified by a senior company official:

a. that the facilities have been constructed in compliance with all applicable conditions, and that continuing activities will be consistent with all applicable conditions; or

b. identifying which of the conditions in the Order National Fuel has complied with or will comply with. This statement shall also identify any areas affected by the Project where compliance measures were not properly implemented, if not previously identified in filed status reports, and the reason for noncompliance.

13. **Prior to construction and as a part of its Implementation Plan,** National Fuel shall file with the Secretary, for review and written approval by the Director of OEP, an analysis of the direct pipe drill method as an alternate method at the two road crossings and the Allegheny River crossing. ***(Section B.1.a)***

14. **Prior to construction,** National Fuel shall file with the Secretary, for review and written approval by the Director of OEP, a geotechnical exploration report that evaluates slope configurations and stability evaluations for the Hinsdale and Pendleton Compressor Stations, meter and regulator station, and interconnect with TGP. ***(Section B.1.a)***

15. **Prior to construction,** National Fuel shall file with the Secretary, for review and written approval by the Director of OEP:

    a. a desktop evaluation utilizing topographic maps and LiDAR imagery to assess the degree of karst development in the work areas. The evaluation shall be followed by a site reconnaissance to field verify and map karst features identified;

    b. if necessary, a geotechnical investigation that identifies areas within the project workspace and along the pipeline alignment or adjacent aboveground facilities where karst is likely to be encountered (at a minimum EMP-03 pipeline, Wheatfield Dehydration Facility, and Pendleton Compressor Station); and

    c. a karst mitigation plan that includes the specific measures that will be implemented to avoid (minor adjustment of facilities) or mitigate (properly close or protect) karst features encountered during construction. At a minimum, the construction measures in this plan shall include:

        (1) stopping work in the area until a remedial assessment is carried out;

        (2) notifying the New York Geological Survey and FERC staff that karst features have been encountered;

        (3) prohibiting construction equipment, vehicles, hazardous materials, chemicals fuels lubricating oils, and petroleum products from being parked, refueled, stored or serviced within a 100 foot radius of any karst feature;

        (4) installing additional erosion control measures to prevent drainage toward any karst feature; and

        (5) using a qualified geologist licensed in the state where the work is being performed to monitor excavation activities at high probability karst. ***(Section B.1.a)***

16. **Within 30 days of placing the facilities in service,** National Fuel shall file with the Secretary a report describing any complaints it received regarding well yield or water quality, the results of any water quality or yield testing that was performed, and how each complaint was resolved. ***(Section B.2.a)***

17. **In the event of the failure of any waterbody HDD**, National Fuel shall file with the Secretary a site-specific open-cut or other crossing plan(s) for review and approval by the Director of OEP. National Fuel shall develop the plans in consultation with the USACE and the plans shall include scaled drawings identifying all areas that will be disturbed by construction and a description of the mitigation measures that will be implemented to minimize effects on water quality and in-stream resources. ***(Section B.2.b)***

18. **Prior to construction,** National Fuel shall file with the Secretary letters of concurrence from the FWS and the NYSDEC demonstrating that water withdrawal from Oil Creek and the Allegheny River is acceptable. ***(Section B.2.b)***

19. **Prior to construction**, National Fuel shall file with the Secretary, for review and written approval from the Director of the OEP, revised project alignment sheets to clarify that the ATWS proposed in wetlands at MPs 24.8 and 76.7 and in waterbodies at MP 5.0, 9.9, and 24.9 have been removed or moved to where the ATWS will be set back at least 10 feet from the water's edge. ***(Section B.2.c)***

20. **Prior to construction**, National Fuel shall file with the Secretary, for review and written approval from the Director of OEP, a revised table B.2.c-2 that demonstrates the ATWS will be properly set back from the feature; or National Fuel shall provide additional justification for the workspace locations. ***(Section B.2.c)***

21. **Prior to construction,** National Fuel shall file with the Secretary, for review and written approval by the Director of OEP, a final invasive plant species plan developed through coordination with the NYSDEC and PADCNR identifying the practices that will be implemented during construction and restoration activities to prevent the introduction and spread of invasive species. ***(Section B.3.c)***

22. National Fuel shall not begin construction activities **until**:

    a. freshwater mussel surveys are complete for Dodge Creek and Ischua Creek for the clubshell and the rayed bean;

    b. National Fuel submits full survey reports to the FWS' New York Field Office, the PFBC, and the Secretary;

    c. the FERC staff completes ESA Section 7 consultation with the FWS; and

    d. National Fuel has received written notification from the Director of OEP that construction or use of mitigation may begin. ***(Section B.4.d)***

23. **Prior to construction in the Bear Creek State Forest**, National Fuel shall file with the Secretary, for review and written approval by the Director of OEP, its final plan for construction across the state forest including any special mitigation measures, restoration measures, and any applicable agency correspondence. ***(Section B.5.a)***

24. **Prior to construction,** National Fuel shall file with the Secretary, for review and written approval of the Director of OEP, its final visual screening plan for the Pendleton Compressor Station. The plan shall, at a minimum, show the locations of facility components, roads, parking areas, and include a description of the types and quantities of vegetation screening to be planted. The plan shall also describe how National Fuel's building design is consistent with the existing landscape. ***(Section B.5.e)***

25. National Fuel shall not begin implementation of any treatment plans/measures (including archaeological data recovery); construction of facilities; or use of any staging, storage, or

temporary work areas and new or to-be-improved access roads in areas not previously evaluated or where access was denied **until**:

a. National Fuel files with the Secretary:

(1) all cultural resources survey reports, including evaluation reports, avoidance plans, and treatment plans;

(2) comments on survey reports, evaluation reports, avoidance plans, and treatment plans from the SHPO as well as any comments from federally recognized Indian tribes;

(3) comments from the ACHP if historic properties would be adversely affected; and

b. The FERC staff reviews and the Director of OEP approves all cultural resources survey reports and plans, and notifies National Fuel in writing that treatment plans/measures may be implemented and/or construction may proceed.

All material filed with the FERC that contains location, character, and ownership information about cultural resources must have the cover and any relevant pages therein clearly labeled in bold lettering: **"CONTAINS PRIVILEGED INFORMATION – DO NOT RELEASE."** ***(Section B.6)***

26. **Prior to construction of the Highway 16 HDD**, National Fuel shall file with the Secretary, for the review and written approval by the Director of OEP, an HDD noise mitigation plan to reduce the projected noise level attributable to the drilling operations at the Highway 16 HDD entry location. During operation of the HDD, National Fuel shall implement the approved plan, monitor noise levels, include the noise level results in its bi-weekly status reports, and make all reasonable efforts to restrict the noise attributable to the drilling operations to no more than an L_{dn} of 55 dBA at the closest NSAs to the HDD entry points. ***(Section B.8.b)***

National Fuel shall file with the Secretary, for review and approval of the Director of OEP, a noise survey **no later than 60 days** after placing each of the aboveground facilities into service. If a full load condition noise survey is not possible, National Fuel shall provide an interim survey at the maximum possible power load and provide the full power load survey **within 6 months**. If the noise attributable to the operation of all of the equipment at any facility at interim or full power load conditions exceeds 55 dBA L_{dn} at any nearby NSAs, National Fuel shall file a report on what changes are needed and shall install additional noise controls to meet the level **within 1 year** of the in-service date. National Fuel shall confirm compliance with the above requirement by filing a second noise survey with the Secretary **no later than 60 days** after it installs the additional noise controls. ***(Section B.8.b)***

E. REFERENCES

Berkey, Christopher. 2015. Telephone communication on August 19, 2015 between R. Bernacki and C. Berkey (Pennsylvania Department of Environmental Protection).

BikePA.com. 2016. BicyclePA Routes. http://www.bikepa.com/routes/index.htm. Accessed March 2016.

Bureau of Labor Statistics. 2015. Consumer Price Index – CPI Inflation Calculator. 2015. Available online at: http://www.bls.gov/data/inflation_calculator.htm. Accessed April 2015.

Burgess, M.M. and S.L. Smith. 2001. Shallow ground temperatures. Bulletin of the Geological Survey of Canada. 547: 89-103.

Commonwealth of Pennsylvania. 2011. The Pennsylvania Code. Chapter 93. Water Quality Standards, General Provisions, Definitions. Available online at: http://www.pacode.com/secur/data/025/chapter93/s93.1.html. Accessed September 2011.

Commonwealth of Pennsylvania. 2015. The Pennsylvania Code. Title 58, Chapter 57, Subchapter A. Fisheries Policies. Available online at: http://www.pacode.com/secure/data/058/058toc.html. Accessed January2015.

Cooper, Edwin L. 1983. Fishes of Pennsylvania and the Northeastern United States. The Pennsylvania State University Press and University Park and London.

Council on Environmental Quality. 1997a. Environmental *Justice Guidance under the National Environmental Policy Act*. Council on Environmental Quality, Washington, D.C. Available online at: http://www3.epa.gov/environmentaljustice/resources/policy/ej_guidance_nepa_ceq1297.pdf. Accessed January 2016.

Council on Environmental Quality. 1997b. Considering Cumulative Effects under the National Environmental Policy Act. January 1997.

Council on Environmental Quality. 2005. Guidance on the Consideration of Past Actions in Cumulative Effects Analysis. June 2005.

Cowardin, L.M., V. Carter, F.C. Golet, and E.T. LaRoe. 1979. Classification of Wetlands and Deepwater Habitats of the United States. FWS/OBS-79/31, Washington, D.C. 131 pp.

Crawford, Christopher. 2015. Email correspondence dated June 25, 2015 between C. Crawford (Cattaraugus County Health Department) and R. Bernacki (Tetra Tech).

Davies, W.E., J.H. Simpson, G.C. Ohlmacher, W.S. Kirk, and E.G. Newton. 1984. Engineering Aspects of Karst. U.S. Geological Survey. Reston, Virginia.

Degman, Gene. 2015. Telephone communication on August 19, 2015 between R. Bernacki (Tetra Tech) and G. Degman (Town of Sardinia).

Designated Water Uses and Water Quality Criteria, Pa. Code § 93.9 (2013) ed.

Diskin, B., J. Friedman, S. Peppas, and S. Peppas. 2011. The Effect of Natural Gas Pipelines on Residential Value. *Right of Way*. January/February 2011. International Right of Way, Gardena, California.

Donato, M. 2000. "Ambystoma laterale" (On-line), Animal Diversity Web. Available online at: http://animaldiversity.ummz.umich.edu/accounts/Ambystoma_laterale/. Accessed November 2014.

Dunn, G., C. Lorne, G. Fryer, and M. Pockar. 2008. Effects of Heat from a Pipeline on Crop Growth – Interim Results. *Environmental Concerns in Rights-of-Way Management: Eighth International Symposium*.

Environmental Laboratory. 1987. *Corps of Engineers Wetlands Delineation Manual*, Technical Report Y-87-1, U.S. Army Engineers Waterways Experiment Station, Vicksburg, MS. 100 pp.

Erie County Department of Health. 2015. Email dated July 8, 2015, from T. Muscarella, Senior Public Health Sanitarian to R. Bernacki (Tetra Tech).

Federal Emergency Management Agency. 2014. National Flood Hazard Layer (Official). Available online at: http://fema.maps.arcgis.com/home/. Accessed June 2015.

Fenneman, N.M. 1938. Physiography of Eastern United States. McGraw-Hill Book Company, Inc. 714 pp.

Fenneman, N.M. and Johnson, D.W. 1946. Physiographic Divisions of the Conterminous United States. U.S. Geological Survey. Reston, VA.

Fisheries and Oceans Canada. 2013. Aquatic species at risk – the wavy-rayed lampmussel. Available online at: http://www.dfo-mpo.gc.ca/species-especes/species-especes/lampmussels-lampsile-eng.htm. Accessed November 2014.

Fleeger, G.M. 1999. The Geology of Pennsylvania's Groundwater (3rd ed.): Pennsylvania Geological Survey, 4th ser., Educational Series 3. 34 p.

Flora of North America. 2003. Flora of North America Editorial Committee. Scirpus pedicellatus. Flora of North America (Vol. 23). Available online at: http://www.efloras.org/florataxon.aspx?flora_id=1&taxon_id=242357971.

Fruits, E. 2008. *Natural Gas Pipelines and Residential Property Values: Evidence from Clackamas and Washington Counties.* ECONorthwest, Portland, Oregan. Available online at: http://pstrust.org/docs/NGPipesPropertyValues.pdf. Accessed April 2015.

Funke, Dolores. 2015. Email correspondence dated August 10, 2015 between D. Funke (Erie County Department of Health) and R. Bernacki (Tetra Tech).

Governor's Marcellus Shale Advisory Commission. 2011. Governor's Marcellus Shale Advisory Commission Report. July 22, 2011. Available online at: http://www.marcellus.psu. edu/ resources/PDFs/MSACFinalReport.pdf. Accessed February 2016.

Gwozdek, Ron. 2015. Personal communication on June 24, 2015 between R. Gwozdek (Niagara County Department of Health) and R. Bernacki (Tetra Tech).

Hellebuyck, Brian R. 2015a. Pendleton Compressor Station (Preferred Location): Ambient Sound Survey and Noise Impact Analysis. Hoover & Keith Inc. Houston, Texas.

Hellebuyck, Brian R. 2015b. Wheatfield Dehydration Facility: Ambient Sound Survey and Noise Impact Analysis. Hoover & Keith Inc. Houston, Texas.

Hellebuyck, Brian R. 2015c. Existing Porterville Compressor Station and Proposed X-N Pressure Reduction Station Preconstruction Sound Survey and Noise Impact Analysis. Hoover & Keith Inc. Houston, Texas.

Hunt, C.B. 1967. Physiography of the United States. W.H. Freeman and Company.

Interstate Natural Gas Association of America Foundation, Inc. 2001. *Natural Gas Pipeline Impact Study*. Prepared by Allen, Williford & Seale, Inc., Houston, Texas, for The INGAA Foundation, Inc., Washington D.C. Available online at: http://www.ingaa.org/ Foundation/Studies/FoundationReports/207.aspx. Accessed April 2015.

Locking, B. and S. Padamonsky. 2015. *Addendum Phase I Archaeological Investigations Report, Northern Access 2016 Pipeline Project, McKean County, ER 2014-1387-083-B & C. FERC Docket No. PF14-18-000.* Prepared by Tetra Tech, Inc. for National Fuel Gas Supply Company.

Locking, B., R. Peltier, and S. Padamonsky. 2015a. *Phase I Archaeological Investigations Report, Northern Access 2016 Pipeline Project, McKean County, ER 2014-1387-083-B & C. FERC Docket No. PF14-18-000.* Prepared by Tetra Tech, Inc. for National Fuel Gas Supply Company.

Locking, B., R. Peltier, S. Padamonsky, and H. Locking. 2015b. *Phase I Archaeological Investigations Report, Northern Access 2016 Pipeline Project, Erie, Cattaraugus, Allegany, and Niagara Counties, PR#14PR02428. FERC Docket No. PF14-18-000.* Prepared by Tetra Tech, Inc. for National Fuel Gas Supply Company.

Locking, B., S. Padamonsky, and M. Karpinski. 2016. *Addendum Phase I Archaeological Investigations Report, Northern Access 2016 Pipeline Project, Erie, Cattaraugus, Allegany, and Niagara Counties, 14PR02428. FERC Docket No. CP15-115-000.* Prepared by Tetra Tech, Inc. for National Fuel Gas Supply Company.

McKean County Planning Commission. 2007. McKean County Comprehensive Plan. Available online at: http://www.mckeancountypa.org/Media/Files/McKean%20Comprehensive% 20Plan/complan%20combined.pdf. Accessed May 2016.

Minnesota Department of Natural Resources. 2014a. Species profile: Round pigtoe (Pleurobema sintoxia). Available online at: http://www.dnr.state.mn.us/rsg/profile. html?action= elementDetail&selectedElement=IMBIV35070. Accessed November 2014.

Minnesota Department of Natural Resources. 2014b. Rare species guide: Lasmigona compressa. Available online at: http://www.dnr.state.mn.us/rsg/profile.html?action=element Detail&selectedElement=IMBIV22020. Accessed November 2014.

Naeth, M.A., D.S. Chanasyk, W.B. McGill, and A.W. Bailey. 1993. Soil temperature regime in mixed prairie rangeland after pipeline construction and operation. Can. Agriculture Engineering. 35(2): 89-95.

National Marine Fisheries Service. 2015. Essential Fish Habitat Mapper v3.0. Available online at: http://www.habitat.noaa.gov/protection/efh/efhmapper/index.html. Accessed July 2015.

National Oceanic and Atmospheric Administration. 2014. Guide to Essential Fish Habitat Designations in the Northeastern United States. Available online at: http://www.nero. noaa.gov/hcd/webintro.html. Accessed December 2014.

National Park Service. 2011. Nationwide Rivers Inventory. Available online at: http://www.nps .gov/ncrc/programs/rtca/nri/index.html. Accessed April 2015

National Park Service. 2016. https://www.nps.gov/noco/index.htm. Accessed March 2016.

National Wild and Scenic Rivers System. 2015. Explore Designated Rivers. Available online at: http://www.rivers.gov/map.php. Accessed April 2015.

NatureServe. 2015. NatureServe Explorer: An online encyclopedia of life [web application]. Version 7.1. NatureServe, Arlington, Virginia. Available online at: http://explorer. nat ureserve.org. Accessed January 2016.

New York Invasive Species Information Website. 2015. Available online at: http://www.nyis. info/index.php. Accessed June 2015.

New York Natural Heritage Program. 2013a. Online Conservation Guide for *Carex chordorrhiza*. Available online at: http://acris.nynhp.org/guide.php?id=9467. Accessed November 2014.

New York Natural Heritage Program. 2013b. Online Conservation Guide for *Carex lupuliformis*. Available online at: http://acris.nynhp.org/guide.php?id=9501. Accessed November 2014.

New York Natural Heritage Program. 2013c. Online Conservation Guide for *Carex schweinitzii*. Available online at: http://acris.nynhp.org/guide.php?id=9514. Accessed November 2014.

New York State Department of Environmental Conservation. 1990. Memorandum dated October 23, 1990 from DeGaetano to Regional Water Engineers, Bureau Directors, and Section Chiefs. Division of Water Technical and Operation Guidance Series (2.1.3). Available online at: http://www.dec.ny.gov/docs/water_pdf/togs213.pdf. Accessed April 2015.

New York State Department of Environmental Conservation. 1991. Part 701: Classifications-Surface Waters and Groundwaters. Available online at: http://www.dec. ny.gov/regs/4592.html#15987. Accessed April 2015.

New York State Department of Environmental Conservation. 1993. Part 701: Classifications-Surface Waters and Groundwaters. Available online at: http://www.dec. ny.gov/regs/4592.html. Accessed November 16, 2014.

New York State Department of Environmental Conservation. 1997. Policy DAR-1: Guidelines for the Control of Toxic Ambient Air Contaminants. Available online at: http://www.dec. ny.gov/chemical/30681.html. Accessed May 2016.

New York State Department of Environmental Conservation. 2009. NYS Groundwater Assessment. Available online at: http://www.dec.ny.gov/docs/water_pdf/305bgrndw10.pdf. Accessed January 2016.

New York State Department of Environmental Conservation. 2013a. Water Quality Classifications - NYS. November 2013. Available online at: http://gis.ny.gov/gisdata/inventories/details.cfm?DSID=1118. Accessed November 2014.

New York State Department of Environmental Conservation. 2013b. DEC Roads and Trails. GIS metadata. Accessed April 2015.

New York State Department of Environmental Conservation. 2014a. Environmental Site Remediation Database Search. Available online at: http://www.dec.ny.gov/cfmx/extapps/derexternal/index.cfm?pageid=3. Accessed November 2014.

New York State Department of Environmental Conservation. 2014b. The FINAL New York State 2014 Section 303€ List of Impaired Waters Requiring a TMDL/Other Strategy. Available online at: http://www.dec.ny.gov/docs/water_pdf/303dlistfinal2014.pdf. Accessed January 2016.

New York State Department of Environmental Conservation. 2014c. Water Wells. Available online at: https://gis.ny.gov/gisdata/inventories/details.cfm?DSID=1203. Accessed November 2014.

New York State Department of Environmental Conservation. 2014d. Letter dated August 26, 2014, from N. Conrad (Information Resource Coordinator) to S. Lare (Tetra Tech).

New York State Department of Environmental Conservation. 2014e. Bald Eagle Fact Sheet. Available online at: http://www.dec.ny.gov/animals/74052.html. Accessed November 2014.

New York State Department of Environmental Conservation. 2014f. Northern Harrier Fact Sheet. Available online at: http://www.dec.ny.gov/animals/7090.html. Accessed November 2014.

New York State Department of Environmental Conservation. 2014g. Eastern hellbender Fact Sheet. Available online at: http://www.dec.ny.gov/animals/7160.html. Accessed November 2014.

New York State Department of Environmental Conservation. 2014h. Coastal Management. Available online at: http://www.dec.ny.gov/lands/28923.html. Accessed April 2015.

New York State Department of Environmental Conservation. 2014i. New York State Department of Environmental Conservation Ambient Air Quality Report for 2013 (air quality monitoring data tables). Available online at: www.dec.ny.gov/chemical/8536.html. Accessed April 2016.

New York State Department of Environmental Conservation. 2014j. Annual Guidance Concentrations/Short-term Guidance Concentrations Reference Assignments. Available online at: http://www.dec.ny.gov/docs/air_pdf/agcsgc14.pdf. Accessed May 2016.

New York State Department of Environmental Conservation. 2015a. Environmental Navigator. Available online at: http://www.dec.ny.gov/imsmaps/minerals/viewer.htm. Accessed April 2015.

New York State Department of Environmental Conservation. 2015b. Groundwater. Available online at: http://www.dec.ny.gov/lands/36064.html. Accessed April 2015.

New York State Department of Environmental Conservation. 2015c. Primary & Principal Aquifers. Available online at: http://www.dec.ny.gov/lands/36119.html. Accessed April 2015.

New York State Department of Environmental Conservation. 2015d. Letter dated May 5, 2015, from N. Conrad (Information Resource Coordinator) to S. Lare (Tetra Tech).

New York State Department of Environmental Conservation. 2015e. Bear Creek State Forest. Available online at: http://www.dec.ny.gov/lands/63657.html. Accessed April 2015.

New York State Department of Environmental Conservation. 2016a. Setback Requirements. Available online at: http://www.dec.ny.gov/lands/5918.html. Accessed April 2016.

New York State Department of Environmental Conservation. 2016b. The DRAFT New York State 2016 Section 303(d) List of Impaired Waters Requiring a TMDL/Other Strategy. Available online at: http://www.dec.ny.gov/docs/water_pdf/303dlistdraftjan2016.pdf. Accessed January 2016.

New York State Department of Environmental Conservation. 2016c. Protection of Waters Program, Classification of Waters. Available online at: http://www.dec.ny.gov/permits/6042.html. Accessed January 2016.

New York State Department of Environmental Conservation. 2016d. Bluebreast Darter Fact Sheet. Available online at: http://www.dec.ny.gov/animals/26042.html. Accessed January 2016.

New York State Department of Environmental Conservation. 2016e. Streamline Chub Fact Sheet. Available online at: http://www.dec.ny.gov/animals/26007.html. Accessed January 2016.

New York State Department of Environmental Conservation. 2016f. New York State Groundwater Assessment. Available online at: http://www.dec.ny.gov/docs/water_pdf/305bgrndw10.pdf. Accessed May 2016.

New York State Department of Health. 1999. New York State Source Water Assessment Program Plan, Final. Available online at: https://www.health.ny.gov/environmental/water/drinking/swapp.pdf. Accessed January 2016.

Niagara County. 2016. Niagara Communities Comprehensive Plan. Available online at: http://www.niagaracounty.com/Portals/0/docs/NCCompPlan/ChapterIII-EnvironmentalSettingandExistingConditions.pdf. Accessed May 2016.

North Country Trail Association. 2016. Available online at: https://northcountrytrail.org/trail/states/new-york/. Accessed March 2016.

O'Rourke, T.D. and M.C. Palmer. 1996. Earthquake performance of gas transmission pipelines. Earthquake Spectra. Vol. 12, No. 3, p.493-527.

Palomar Gas Transmission, LLC. 2008. *Impact of Natural Gas Pipeline on Property Values*. Prepared by PGP Valuation, Inc., Portland, Oregon, for Palomar Gas Transmission, LLC, Portland, Oregon. Available online at: http://pstrust.org/docs/Pipeline_Impact_on_Property_Values.pdf. Accessed April 2015.

Peltier, R. and S. Villacorta. 2016a. Historic *Resources Survey Report, Northern Access 2016 Pipeline Project, Erie, Cattaraugus, Allegany, and Niagara Counties, New York. CP15-115 (formerly PF14-18-000) OPRHP Project No. 14PR02428.* Prepared by Tetra Tech, Inc. for National Fuel Gas Supply Company.

Peltier, R. and S. Villacorta. 2016b. *Historic Resources Survey Report, Northern Access 2016 Pipeline Project, McKean County, ER 2014-1387-083-H. FERC Docket No. CP15-115 (formerly PF14-18-000).* Prepared by Tetra Tech, Inc. for National Fuel Gas Supply Company.

Penn State Cooperative Extension College of Agricultural Sciences. 2007. A Quick Guide to Groundwater in Pennsylvania. Available online at: http://extension.psu.edu/natural-resources/water/watershed-education/watershed-publications/a-quick-guide-to-groundwater-in-pennsylvania/extension_publication_file. Accessed April 2015.

Pennsylvania Code of State Regulations. 2009. Chapter 93. Water Quality Standards. Available online at: http://www.pacode.com/secure/data/025/chapter93/chap93toc.html. Accessed January 2016.

Pennsylvania Department of Conservation and Natural Resources. 2013a. DCNR – State Forest Lands 2013 (vector digital data). Available online at: http://www.pasda.psu.edu/. Accessed April 2015.

Pennsylvania Department of Conservation and Natural Resources. 2013b. DCNR – State Forest Wild and Natural Areas 2013 (vector digital data). Available online at: http://www.pasda.psu.edu/. Accessed April 2015.

Pennsylvania Department of Conservation and Natural Resources. 2014a. Bureau of Topographic and Geologic Survey Pennsylvania Groundwater Information System database. Available online at: http://www.dcnr.state.pa.us/topogeo/index.aspx. Accessed November 2014.

Pennsylvania Department of Conservation and Natural Resources. 2014b. Letter dated July 17, 2014, from R. Bowen (Section Chief) to S. Lare (Tetra Tech).

Pennsylvania Department of Conservation and Natural Resources. 2015a. DCNR Invasive Plants. Available online at: http://www.dcnr.state.pa.us/cs/groups/public/documents/document/dcnr_20026634.pdf. Accessed June 2015.

Pennsylvania Department of Conservation and Natural Resources. 2015b. State Forest District Index. Available online at: http://www.dcnr.state.pa.us/forestry/stateforests/. Accessed April 2015.

Pennsylvania Department of Conservation and Natural Resources. 2015c. Susquehannock State Forest. Available online at: http://www.dcnr.state.pa.us/forestry/stateforests/susquehannock/index.htm. Accessed April 2015.

Pennsylvania Department of Conservation and Natural Resources. 2015d. ExplorePAtrails.com. Available online at: http://www.explorepatrails.com/singletrail.aspx?ID=429. Accessed April 2015.

Pennsylvania Department of Environmental Protection. Water Planning Office. 2014. Coastal Resources Management Program. http://www.dep.state.pa.us/river/czmp.htm. Accessed April 2015.

Pennsylvania Department of Environmental Protection. 2002. The Wellhead Protection Program in Pennsylvania: An Overview. Available online at: https://www.dep.state.pa.us/dep/deputate/watermgt/wc/subjects/srceprot/source/whppover.htm. Accessed January 2016.

Pennsylvania Department of Environmental Protection. 2014. Total Maximum Daily Loads. Available online at: http://www.ahs.dep.pa.gov/TMDL/. Accessed December 2015.

Pennsylvania Department of Environmental Protection. 2015a. Industrial Mineral Mining Operations. Available online at: http://www.pasda.psu.edu/. Accessed April 2015.

Pennsylvania Department of Environmental Protection. 2015b. Oil and Gas Locations. Available online at: http://www.pasda.psu.edu/. Accessed April 2015.

Pennsylvania Department of Environmental Protection. 2015c. HSCA Remedial Sites Listing and De-listing Dates. Available online at: http://files.dep.state.pa.us/EnvironmentalCleanupBrownfields/SiteRemediation/SiteRemediationPortalFiles/hscalistingdates.pdf. Accessed April 2015.

Pennsylvania Department of Environmental Protection. 2015d. Total Maximum Daily Loads. Available online at: http://www.pasda.psu.edu/uci/SearchResults.aspx?Keyword=tmdl&Go=Go&searchType=keyword&condition=AND&sessionID=1468542882015128111332. Accessed June 2015.

Pennsylvania Department of Environmental Protection. 2015e. Personal communication between C. Berkey (Source Water Protection Coordinator, PADEP) and B. Bernacki (Tetra Tech).

Pennsylvania Fish and Boat Commission. 2014a. Approved Trout Waters (Flowing Waters). Available online at: http://www.pasda.psu.edu/uci/SearchResults.aspx?originator=Pennsylvania%20Fish%20and%20Boat%20Commission&Keyword=&searchType=originator&entry=PASDA&sessionID=746050112201541695552. Accessed November 2014.

Pennsylvania Fish and Boat Commission. 2014b. Trout Stocked Streams. Available online at: http://www.pasda.psu.edu/uci/SearchResults.aspx?originator=Pennsylvania%20Fish%20and%20Boat%20Commission&Keyword=&searchType=originator&entry=PASDA&sessionID=746050112201541695552. Accessed November 2014.

Pennsylvania Fish and Boat Commission. 2014c. Letter dated August 5, 2014, from H. Smiles (Chief, Natural Gas Section) to S. Lare (Tetra Tech).

Pennsylvania Fish and Boat Commission. 2014d. Trout Stocked Streams. Available online at: http://www.pasda.psu.edu/data/pafish/TroutStocked_Streams_2014.zip. Accessed November 2014.

Pennsylvania Fish and Boat Commission. 2015. Wild Trout Waters. Available online at: http://fishandboat.com/trout_repro.pdf. Accessed April 2015.

Pennsylvania Fish and Boat Commission. 2016. Letter dated January 4, 2016, from H. Smiles (Chief, Natural Gas Section) to S. Lare (Tetra Tech).

Pennsylvania Game Commission. 2015. Northcentral Regional Map: State Game Lands. Available online at: http://pgcmaps.pa.gov/pgcpublicviewer/. Accessed April 2015.

Pennsylvania Game Commission and Pennsylvania Fish & Boat Commission. 2005. Pennsylvania's Wildlife Action Plan, Version 1.0a. Updated 2008. Available online at: http://www.nbii.gov/portal/server.pt?open=512&objID=903&&PageID=2587&mode=2&in_hi_userid=2&cached=true. Accessed November 14, 2014.

Pennsylvania Natural Heritage Program. 2007a. Pennsylvania endangered fish species: Burbot (Lota lota). Available online at: http://www.naturalheritage.state.pa.us/factsheets/11379.pdf. Accessed November 21, 2014

Pennsylvania Natural Heritage Program. 2007b. PNHP fact sheet: Elktoe (Alasmidonta marginata). Available online at: http://www.naturalheritage.state.pa.us/factsheets/12193.pdf. Accessed November 19, 2014.

Pennsylvania Natural Heritage Program. 2008. McKean County Natural Heritage Inventory. Available online at: http://www.naturalheritage.state.pa.us/CNHI.aspx. Accessed November 2014.

Pennsylvania Natural Heritage Program. 2011. Pennsylvania Natural Heritage Program. Queen-of-the-prairie factsheet. Available online at: http://www.naturalheritage.state.pa.us/factsheets/14525.pdf.

Pennsylvania Natural Heritage Program. 2014. PNHP Species Lists. Available online at: http://www.naturalheritage.state.pa.us/Species.aspx. Accessed November 3, 2014.

Pennsylvania State University, Penn State Institutes of the Environment. 2014. Streams CH93 Existing Use 2014_09. Available online at: http://www.pasda.psu.edu/uci/FullMetadataDisplay.aspx?file=StreamsCH93ExistingUse2014_09.xml. Accessed June 2015.

Radbruch-Hall, D.H., R.B. Colton, W.E. Davies, Ivo Lucchitta, B.A. Skipp, and D.J. Varnes. 1982. Landslide Overview Map of the Conterminous United States. Geological Survey Professional Paper 1183. U.S. Geological Survey, Washington.

Rails-to-Trails Conservancy. 2015. Trail Link. Available online at: http://www.traillink. com/state/pa-trails.aspx. Accessed April 2015.

Real Property Services, LLC. 2015. *Market Study Analysis of Market Value Impact to Real Property from Compressor Station Facilities in Seven (7) Selected Sites, New York State*.

Shaw, T. 2015. Letter dated on June 30, 2015 from T. Shaw (Allegany County Department of Health) to R. Bernacki (Tetra Tech).

Soil Survey Division Staff. 1993. Soil Survey Manual. U.S. Department of Agriculture Agricultural Handbook 18.

Soil Survey Staff, Natural Resources Conservation Service, U.S. Department of Agriculture. 2015a. Web Soil Survey. Available online at: http://websoilsurvey.sc.egov.usda. gov/App/HomePage.htm. Accessed April 2015.

Soil Survey Staff, Natural Resources Conservation Service, U.S. Department of Agriculture. 2015b. Official Soil Series Descriptions. Available online at: https://soilseries.sc.egov.usda.gov/osdname.asp. Accessed April 2015.

Stuck, K. and S. Johnston. 2016. *Phase II Archaeological Investigations Report, Northern Access 2016 Pipeline Project, Cattaraugus County, PR#14PR02428. FERC Docket No. CP15-115 (formerly PF14-18-000).* Prepared by Tetra Tech, Inc. for National Fuel Gas Supply Company.

Sullivan, Timothy. 2014. Telephone communication in September 2014 between T. Sullivan (Biologist, U.S. Fish and Wildlife Service) and P. Green (Tetra Tech).

U.S. Army Corps of Engineers. 1992. Engineering and Design Bearing Capacity of Soils. Engineer Manual No. 1110-1-1905. Department of the Army, Washington, D.C.

U.S. Army Corps of Engineers. 2012a. *Regional Supplement to the Corps of Engineers Wetland Delineation Manual: Eastern Mountains and Piedmont Region Version 2.0*, ed. J. F. Berkowitz, J. S. Wakeley, R. W. Lichvar, C. V. Noble. ERDC/EL TR-12-9. Vicksburg, MS: U.S. Army Engineer Research and Development Center.

U.S. Army Corps of Engineers. 2012b. *Regional Supplement to the Corps of Engineers Wetland Delineation Manual: Northcentral and Northeast Region (Version 2.0)*, ed. J. S. Wakeley, R. W. Lichvar, C. V. Noble, and J. F. Berkowitz. ERDC/EL TR-12-1. Vicksburg, MS: U.S. Army Engineer Research and Development Center.

U.S. Bureau of Labor Statistics. 2015. Local Area Unemployment Statistics. Available online at: http://www.bls.gov/data/#unemployment. Accessed April 2015.

U.S. Census Bureau. 2010. GCT-PH1, Population, Housing Units, Area, and Density: 2010. Available online at: http://factfinder.census.gov/faces/nav/jsf/pages/searchresults. xhtml ?refresh=t. Accessed April 2015.

U.S. Census Bureau. 2012a. DP05, ACS Demographic and Housing Estimates, 2008-2012 American Community Survey 5-Year Estimates. Available online at: http://factfinder. census.gov/faces/nav/jsf/pages/searchresults.xhtml?refresh=t. Accessed April 2015.

U.S. Census Bureau. 2012b. S1903, Median Income in the Past 12 Months, 2008-2012 American Community Survey 5-Year Estimates. Available online at: http://factfinder. census. gov/faces/nav/jsf/pages/searchresults.xhtml?refresh=t. Accessed April 2015.

U.S. Census Bureau. 2012c. DP04, Selected Housing Characteristics, 2008-2012 American Community Survey 5-Year Estimates. Available online at: http://factfinder. census. gov/faces/nav/jsf/pages/searchresults.xhtml?refresh=t. Accessed April 2015.

U.S. Census Bureau. 2012d. C24050, Industry by Occupation for the Civilian Employed Population 16 Years and Over, 2008-2012 American Community Survey 5-Year Estimates. Available online at: http://factfinder.census.gov/faces/nav/jsf/pages/search results.xhtml?refresh=t. Accessed April 2015.

U.S. Census Bureau. 2013. Poverty Methodology. Available online at: http://www.census.gov/ hhes/www/poverty/methods/definitions.html. Accessed April 2015.

U.S. Department of Agriculture - Natural Resource Conservation Service. 2009a. New York Rapid Watershed Assessment Profile, Buffalo-Eighteenmile Watershed. April 2009.

U.S. Department of Agriculture - Natural Resource Conservation Service. 2009b. New York Rapid Watershed Assessment Profile, Cattaraugus Watershed. May 2009.

U.S. Department of Agriculture - Natural Resource Conservation Service. 2009c. New York Rapid Watershed Assessment Profile, Niagara Watershed. October 2009.

U.S. Department of Agriculture - Natural Resource Conservation Service. 2010. New York Rapid Watershed Assessment Profile, Upper Allegheny Watershed. October 2009.

U.S. Department of Agriculture. 2016. Available online at: http://www.nrcs.usda.gov/wps/portal/nrcs/main/national/programs/easements/wetlands/. Accessed March 2016.

U.S. Department of Transportation Pipeline and Hazardous Materials Safety Administration. 2015a. Facts and Stats. Available online at: http://opsweb.phmsa.dot. gov/pipeline forum/facts-and-stats/pipeline-101/. Accessed April 2015.

U.S. Department of Transportation, Pipeline and Hazardous Materials Safety Administration. 2015b. Pipeline Significant Incident 20 Year Trend. Available online at: https://hip.phmsa.dot.gov/analyticsSOAP/saw.dll?Portalpages&NQUser=PDM_WEB_USER&NQPassword=Public_Web_User1&PortalPath=%2Fshared%2FPDM%20Public%20Website%2F_portal%2FSC%20Incident%20Trend&Page=Significant. Accessed April 2015.

U.S. Environmental Protection Agency. 1990. *New Source Review Workshop Manual*. Prevention of Significant Deterioration and Nonattainment Area Permitting. Draft. OAQPS. RTP North Carolina. October, 1990.

U.S. Environmental Protection Agency. 1999. Consideration of Cumulative Impacts in EPA Review of NEPA Documents. Office of Federal Activities (2252A), EPA 315-R-99-002/May 1999. Available online at: http://www.epa.gov/oecaerth/resources/policies/nepa/cumulative.pdf. Accessed May 2015.

U.S. Environmental Protection Agency. 2012. U.S. Global Change Research Program. Available online at: www.epa.gov/ghgreporting/. Accessed January 2015.

U.S. Environmental Protection Agency. 2013a. Sole Source Aquifer Protection Program. Available online at: http://water.epa.gov/infrastructure/drinkingwater/sourcewater/protection/solesourceaquifer.cfm. Accessed April 2015.

U.S. Environmental Protection Agency. 2013b. Sole Source Aquifers in the Southeast. Available online at: http://www.epa.gov/region02/water/aquifer/catt/cattargs.htm. Accessed April 2015.

U.S. Environmental Protection Agency. 2014a. U.S. Superfund National Priority List Sites. Available online at: http://www.epa.gov/enviro/geo_data.html. Accessed November 2014.

U.S. Environmental Protection Agency. 2014b. Emission Factors for Greenhouse Gas Inventories. Available online at: https://www.epa.gov/sites/production/files/2015-07/documents/emission-factors_2014.pdf. Accessed April 2016.

U.S. Environmental Protection Agency. 2014c. AirData Air Quality Monitoring System Data Mart (air quality monitoring database). Available online at: www.epa.gov/air quality/airdata/. Accessed January 2015.

U.S. Environmental Protection Agency. 2014d. Green Book Nonattainment Areas for Criteria Pollutants. Available online at: http://www.epa.gov/oar/oaqps/greenbk/ (last updated July 17, 2014). Accessed January 2015.

U.S. Environmental Protection Agency. 2015a. Impaired Waters and Total Maximum Daily Loads. Available online at: http://water.epa.gov/lawsregs/lawsguidance/cwa/tmdl/ index.cfm. Accessed June 2015.

U.S. Environmental Protection Agency. 2015b. Water: Total Maximum Daily Loads (303d). Available online at: http://wate.epa.gov/lawsregs/lawsguidance/cwa/tmdl/overview.cfm. Accessed June 2015.

U.S. Environmental Protection Agency. 2016. Overview of Greenhouse Gases. Available online at: https://www3.epa.gov/climatechange/ghgemissions/gases.html. Accessed April 2016.

U.S. Federal Highway Administration. 2016. Available online at: https://www.fhwa. dot. gov/inf rastructure/us6.cfm. Accessed March 2016.

U.S. Fish and Wildlife Service. 1997. Clubshell (*Pleurobema clava*). Available online at: http://www.fws.gov/northeast/pafo/pdf/clubshell%20fact%20sheet.pdf. Accessed April 2015.

U.S. Fish and Wildlife Service. 2007. National Bald Eagle Management Guidelines. Available online at: http://www.fws.gov/southdakotafieldoffice/NationalBaldEagleManagement Guidelines.pdf. Accessed April 2015.

U.S. Fish and Wildlife Service. 2008. Birds of Conservation Concern 2008. Available online at: http://www.fws.gov/migratorybirds/NewReportsPublications/SpecialTopics/BCC2008/ BC C2008.pdf. Accessed April 2015.

U.S. Fish and Wildlife Service. 2010. 50 CFR Parts 10 and 21 General Provisions; Migratory Birds Revised List and Permits; Final Rules. Available online at: http://www.fws.gov/ migratorybirds/RegulationsPolicies/mbta/1013%20Final%20Rule%201%20March %202010.pdf. Accessed April 2015.

U.S. Fish and Wildlife Service. 2011. Migratory Birds: Birds Protected by the Migratory Bird Treaty Act. In the Migratory Bird Program. Last Updated December 5, 2013. Available online at: http://www.fws.gov/migratory birds/RegulationsPolicies/mbta/mbintro.html. Accessed January 2015.

U.S. Fish and Wildlife Service. 2012. Rayed Bean (Villosa fabalis). Available online at: http://www.fws.gov/midwest/endangered/clams/rayedbean/pdf/RayedBeanFactSheet.pdf. Accessed April 2015.

U.S. Fish and Wildlife Service. 2014. Letter dated October 15, 2014, from L. Zimmerman (Field Office Supervisor) to S. Lare (Tetra Tech).

U.S. Fish and Wildlife Service. 2015a. Letter dated April 22, 2015, from D. Stillwell (Field Supervisor) to K.D. Bose (Federal Energy Regulatory Commission).

U.S. Fish and Wildlife Service. 2015b. Letter dated August 17, 2015, from L. Zimmerman (Field Office Supervisor) to S. Lare (Tetra Tech).

U.S. Fish and Wildlife Service. 2015c. Indiana Bat Summer Survey Guidance. Available online at: http://www.fws.gov/Midwest/endangered/mammals/inba/inbasummersurveyguidance. html. Accessed February 2016.

U.S. Fish and Wildlife Service. 2015d. Northern Long-eared Bat (*Myotis septrionalis*). Available online at: http://ecos.fws.gov/speciesProfile/profile/speciesProfile.action?spcode=A0JE. Accessed April 2015.

U.S. Fish and Wildlife Service. 2015e. Northern Long-eared Bat Fact Sheet. Available online at: http://www.fws.gov/Midwest/endangered/mammals/nleb/nlebFactSheet.html. Accessed February 2016.

U.S. Fish and Wildlife Service. 2015f. Rabbitsfoot (*Quadrula cylindrica cylindrica*). Available online at: http://www.fws.gov/midwest/endangered/clams/rabbitsfoot/index.html. Accessed April 2015.

U.S. Fish and Wildlife Service. 2015g. Letter dated April 22, 2015, from A. Second (for D. Stilwell, Field Supervisor) to K. Bose (Federal Energy Regulatory Commission).

U.S. Fish and Wildlife Service. 2016. Letter dated June 16, 2016, from L. Lattanzi (Field Office Supervisor) to S. Lare (Tetra Tech).

U.S. Forest Service. 2005. Conservation Assessment: Ohio lamprey (*Ichthyomyzon bdellium*). Available online at: http://www.fs.usda.gov/Internet/FSE_DOCUMENTS/fsm91_054381.pdf. Accessed November 2014.

U.S. Geological Survey. 1981. Landslides and Related Features, Pennsylvania (Warren 1- by 2-Degree Sheet). Open-file Report 81-238. Available online at: http://www.dcnr. state.pa.us/topogeo/hazards/landslides/slidepubs/warren/index.htm. Accessed December 2015.

U.S. Geological Survey. 1987. Geology and Hydrology of the Onondaga Aquifer in Eastern Erie County, New York, with Emphasis on Ground-Water-Level Declines since 1982. Water Resources Investigations Report 86-4317.

U.S. Geological Survey. 1999. Hydrologic Effects of the Pymatuning Earthquake of September 25, 1998, in Northwestern Pennsylvania. USGS WRIR 99-4170.

U.S. Geological Survey. 2006a. ShakeMap Manual: Technical Manual, Users Guide, and Software Guide. Available online at: http://pubs.usgs.gov/tm/2005/12A01/pdf/508TM12-A1.pdf. Accessed April 2015.

U.S. Geological Survey. 2006b. Quaternary Fault and Fold Database of the United States. Available online at: http://earthquakes.usgs.gov/regional/qfaults/. Accessed April 2015.

U.S. Geological Survey. 2008. Seismic-Hazard Maps for the Conterminous United States, 2008. Scientific Investigations Map 3195. Available online at: http://pubs.usgs.gov/sim/3195/. Accessed April 2015.

U.S. Geological Survey. 2010. Hydrogeologic and Geospatial Data for the Assessment of Focused Recharge to the Carbonate-Rock Aquifer in Genesee County, New York. Scientific Investigations Map 3132.

U.S. Geologic Survey. 2012. Hydrogeology of the Olean Area, Cattaraugus County, New York. Water-Resources Investigations Report 85-4157. Available online at: https://pubs.er.usgs.gov/publication/wri854157. Accessed May 2016.

U.S. Geological Survey. 2014a. Mineral Resources On-Line Spatial Data. Geology by state. Available online at: http://mrdata.usgs.gov/geology/state/map.html. Accessed November 2014.

U.S. Geological Survey. 2014b. Mineral Resources On-Line Spatial Data. Mineral Resources Data System. Available online at: http://mrdata.usgs.gov/mrds. Accessed November 2014.

U.S. Geological Survey. 2015. Science in Your Watershed. Available online at: http://water.usgs.gov/wsc/map_index.html. Accessed April 2015.

U.S. Global Change Research Program. 2014. Climate Change Impacts in the United States. May 2014.

Wilde, L., C. Loos, and J. Williamson. 2014. *Pipelines and property Values: An Eclectic Review of the Literature*. Gnarus Advisors, LLC, Los Angeles, California. Available online at: http://www.gnarusllc.com/wp-content/uploads/2012/04/Gnarus-Pipelines-Property-Values.pdf. Accessed April 2015.

YellowBook. 2015. Available online at: www.yellowbook.com. Accessed February 2015.

Zarriello, P.J. and R.J. Reynolds. 2012. Hydrogeology of the Olean area, Cattaraugus County, New York: Water-Resources Investigations Report 85-4157. U.S. Geologic Survey. Available online at: http://pubs.er.usgs.gov/publication/wri854157. Accessed April 2015.

F. LIST OF PREPARERS

Federal Energy Regulatory Commission

Allen, Christine E. – Environmental Project Manager; Proposed Action; Surface Waters and Wetlands; Soils; Land Use; Socioeconomics; Cumulative Impacts; Alternatives
B.S. Marine Biology, 2005, University of North Carolina, Wilmington

Fox-Fernandez, Nancy –Vegetation and Wildlife; Threatened and Endangered Species
M.S., Natural Resources: Wildlife, 2006, Humboldt State University
B.A., Psychology, 1993, Skidmore College

Glaze, James – Geology
B.S. Geology, 1975, California Lutheran University, Thousand Oaks

Monib, Kareem –Air Quality, Noise, Safety and Reliability
M.S., Chemical Engineering, 2000, Pennsylvania State University
B.S., Chemical Engineering, 1998, University of Delaware

Rana, Tony – Groundwater
M.S., International Development, 2012, Tulane University
B.S., Geology, 1984, New Jersey City University
Graduate Studies, Hydrogeology and Geochemistry, 1988, Oklahoma State University

Saint Onge, Ellen – Cultural Resources
M.A., Applied Anthropology, 1994, University of Maryland
B.A., Anthropology, 1988, University of Maryland

Natural Resource Group, LLC (an ERM Group Company)

Thommes, Jeff – Project Manager; Proposed Action; Alternatives; Conclusions and Recommendations; Quality Assurance and Quality Control
M.S., Zoology (Wildlife Ecology), 1994, Southern Illinois University
B.S., Zoology, 1992, Southern Illinois University

Buckless, Mike – Geology and Soils
B.S., Environmental Soil Science and Management, 2013, University of Rhode Island

Enright, Troy – Air Quality and Noise
B.S., Environmental Science, 2003, University of Minnesota, Twin Cities

Nickel, Dave – Reliability and Safety
B.L.A., Environmental Studies, 2002, University of Minnesota, Duluth

Nunley, Janet – Groundwater Resources; Surface Water Resources; Wetland Resources
M.S., Interdisciplinary Ecology, 2002, University of Florida
B.S., Zoology, 2000, University of Florida

20160727-4003 FERC PDF (Unofficial) 07/27/2016

Thyse, DeAnn – Land Use; Socioeconomics; Cultural Resources
M.A., Anthropology, 2008, University of Minnesota
B.A., Anthropology, 1993, University of Wisconsin-Madison

Vine, Marissa – Fisheries and Wildlife; Vegetation; Threatened, Endangered, and Special Status Species
B.S., Ecosystem Restoration and Forest Management, 2012, University of Wisconsin—Stevens Point

20160727-4003 FERC PDF (Unofficial) 07/27/2016

APPENDIX A

PIPELINE ROUTE, ABOVEGROUND FACILITIES, ACCESS ROADS, AND STAGING/CONTRACTOR YARDS MAPS

20160727-4003 FERC PDF (Unofficial) 07/27/2016

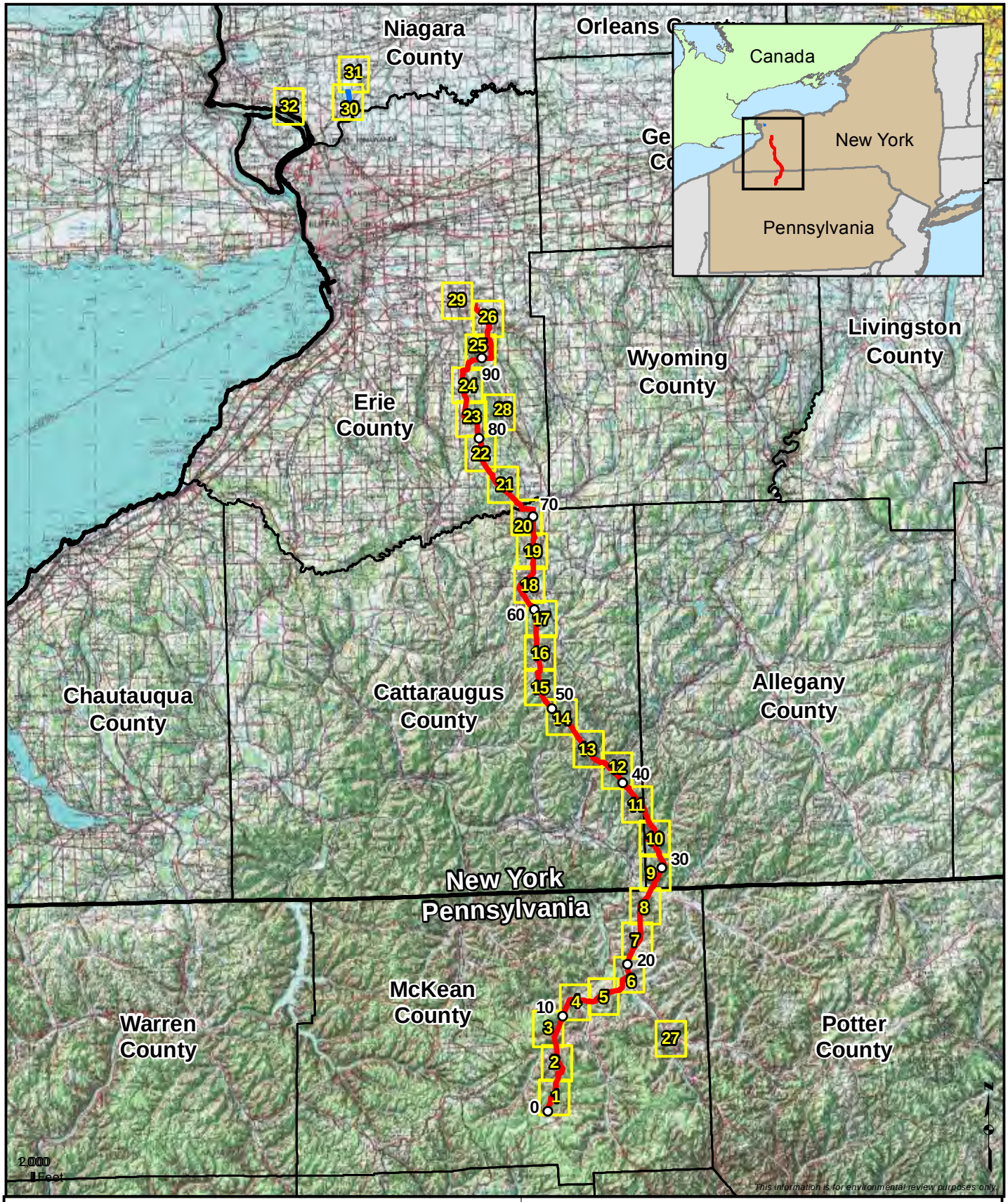

Milepost

Proposed Pipeline

Proposed EMP-03

Sheet Index

Appendix A

Northern Access 2016 Project

Allegany, Cattaraugus, Erie, and Niagara Counties, New York

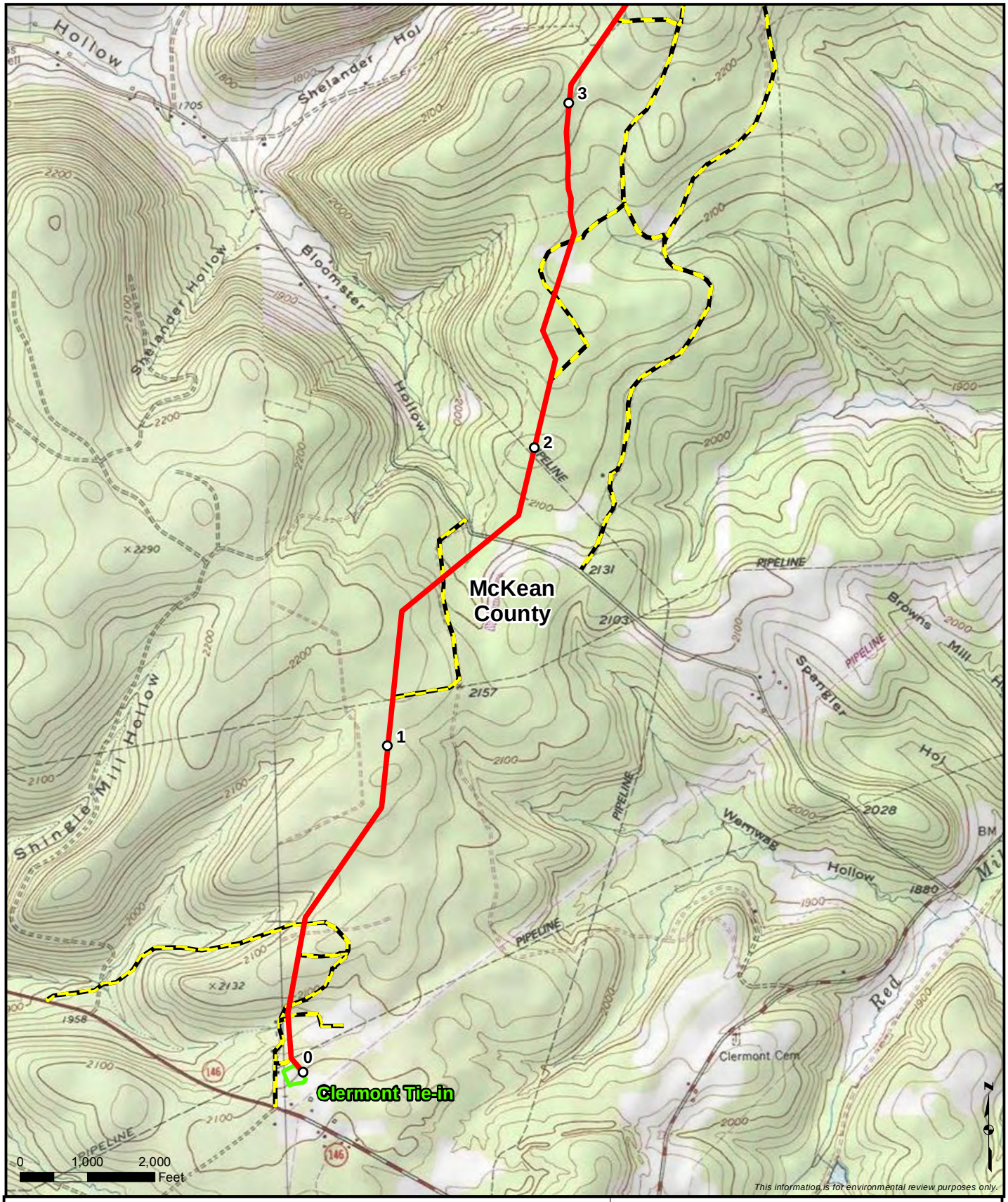

Milepost

Proposed Pipeline

Aboveground Facilities

Access Road

Sheet 1 of 32

Appendix A

Northern Access 2016 Project

Allegany, Cattaraugus, Erie, and Niagara Counties, New York

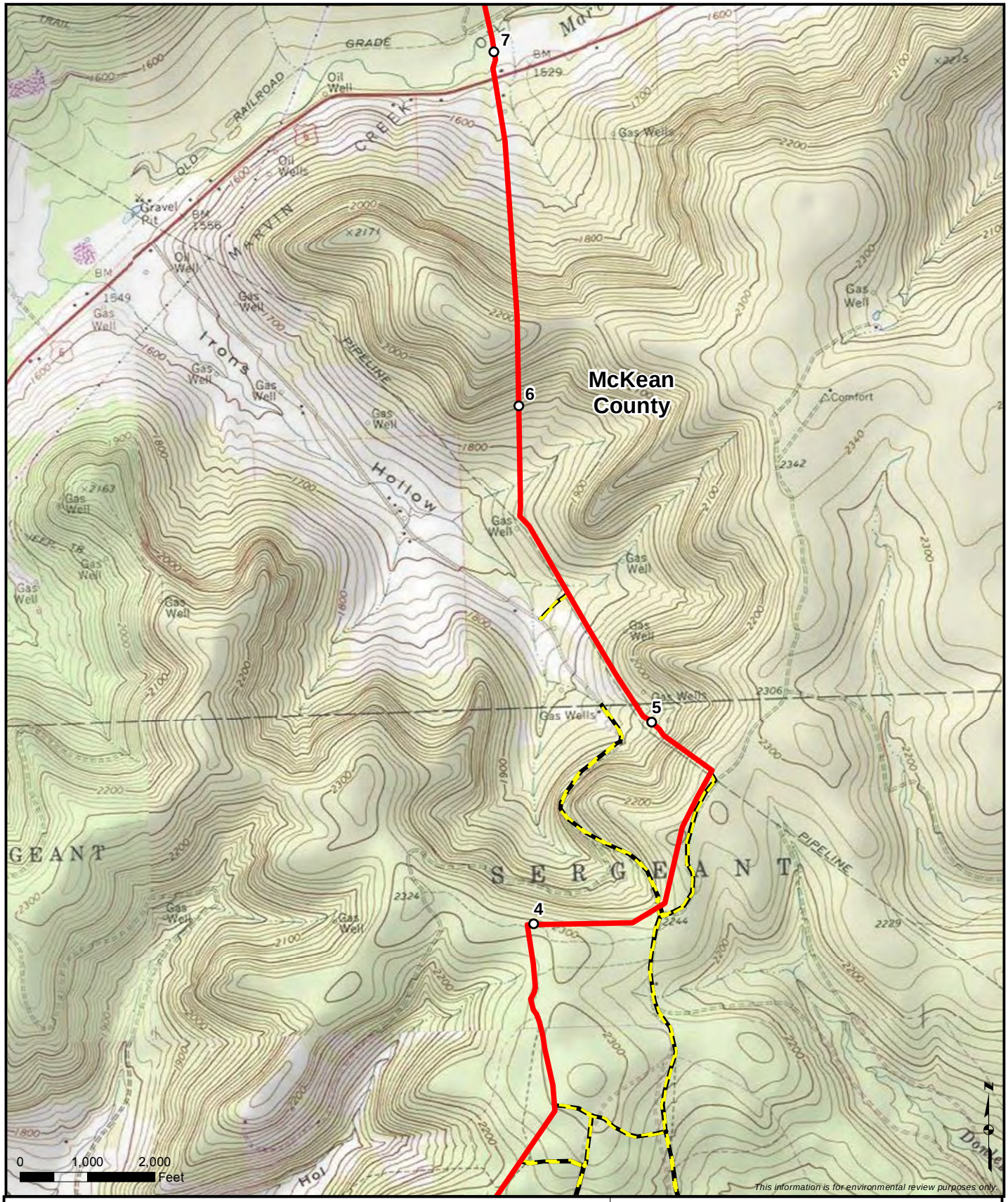

Milepost

Proposed Pipeline

Access Road

Sheet 2 of 32

Appendix A

Northern Access 2016 Project

Allegany, Cattaraugus, Erie, and Niagara Counties, New York

Milepost

Proposed Pipeline

Access Road

Sheet 3 of 32

Appendix A

Northern Access 2016 Project

Allegany, Cattaraugus, Erie, and Niagara Counties, New York

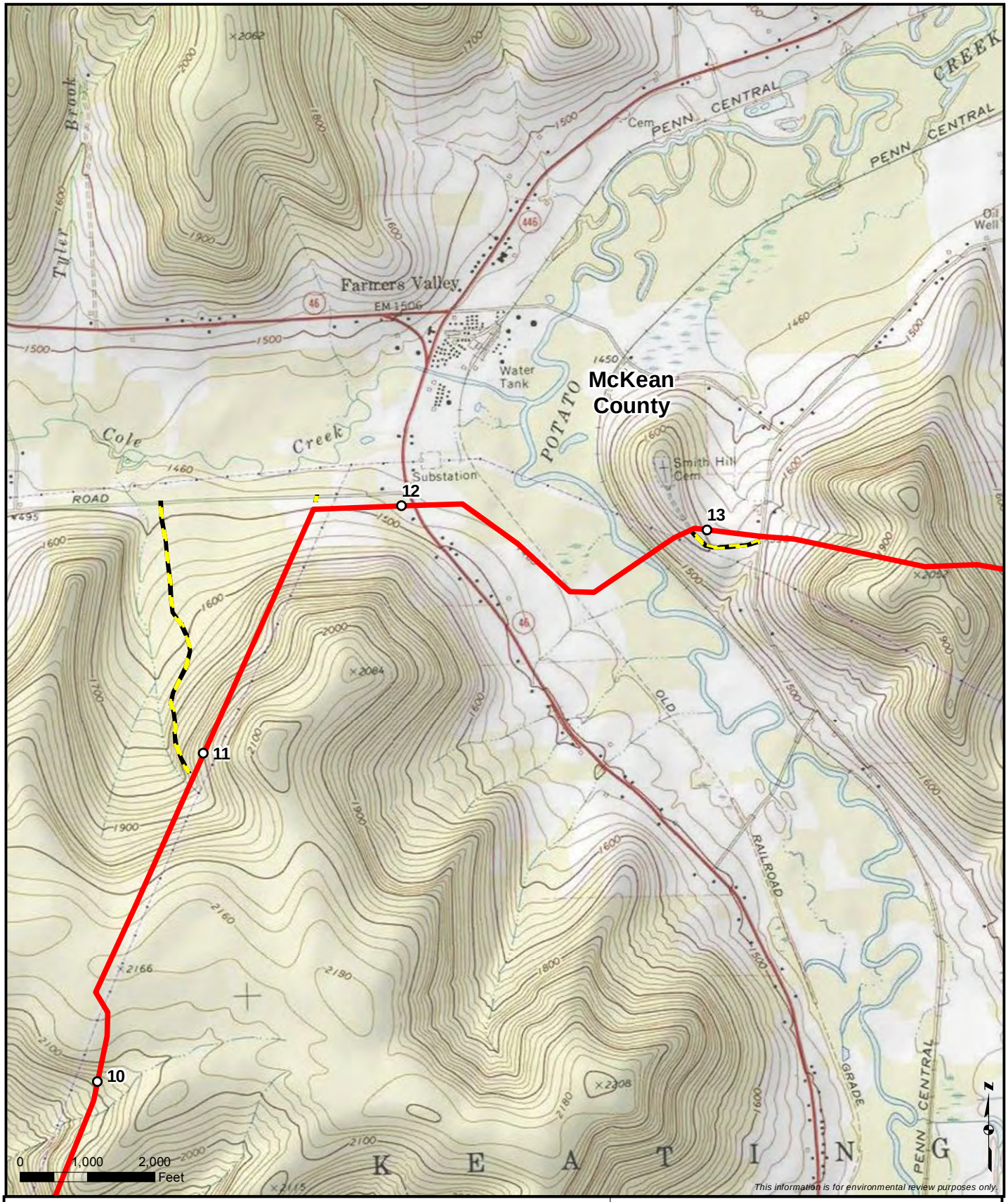

Milepost

Proposed Pipeline

Access Road

Sheet 4 of 32

Appendix A

Northern Access 2016 Project

Allegany, Cattaraugus, Erie, and Niagara Counties, New York

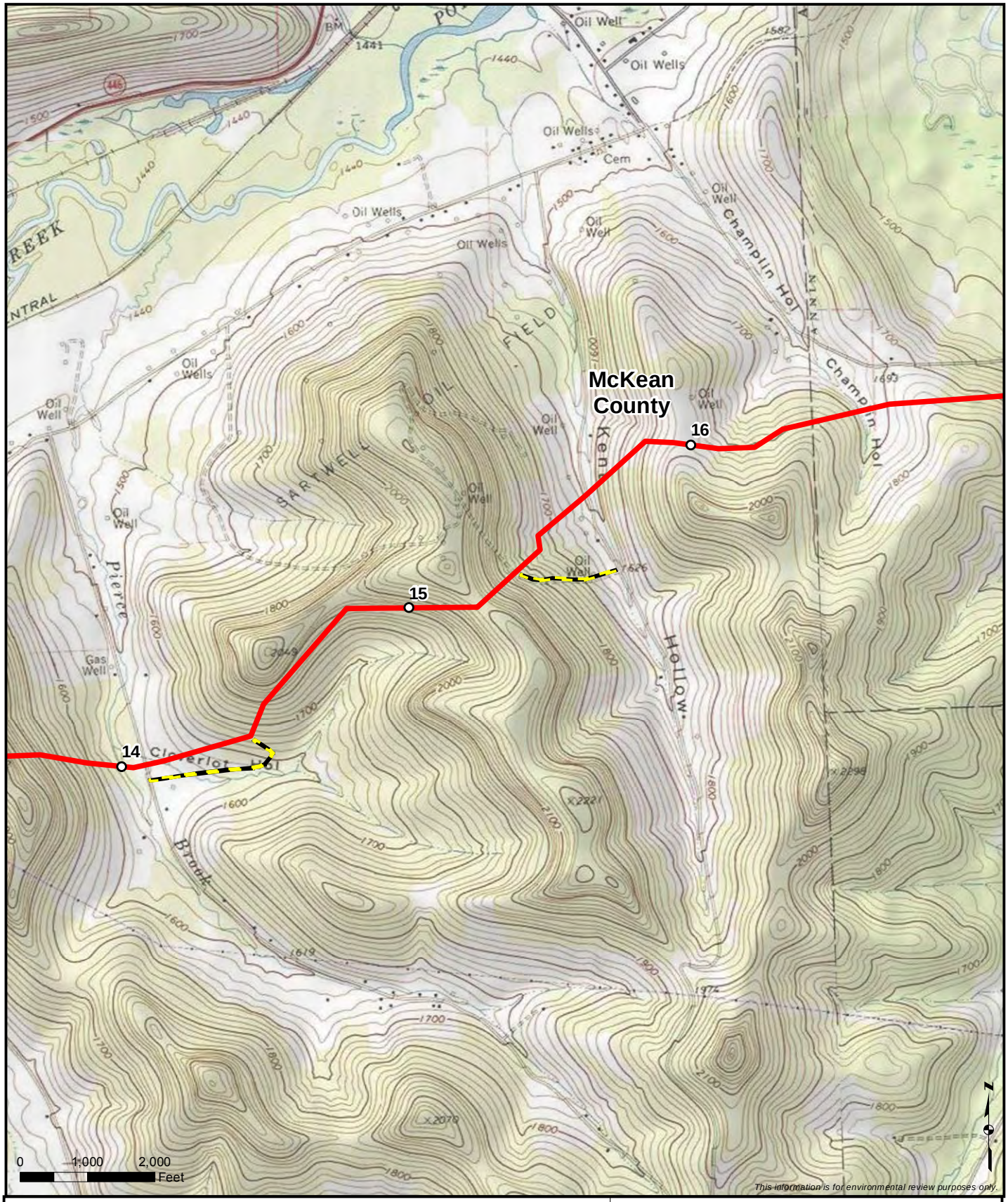

Milepost

Proposed Pipeline

Access Road

Sheet 5 of 32

Appendix A

Northern Access 2016 Project

Allegany, Cattaraugus, Erie, and Niagara Counties, New York

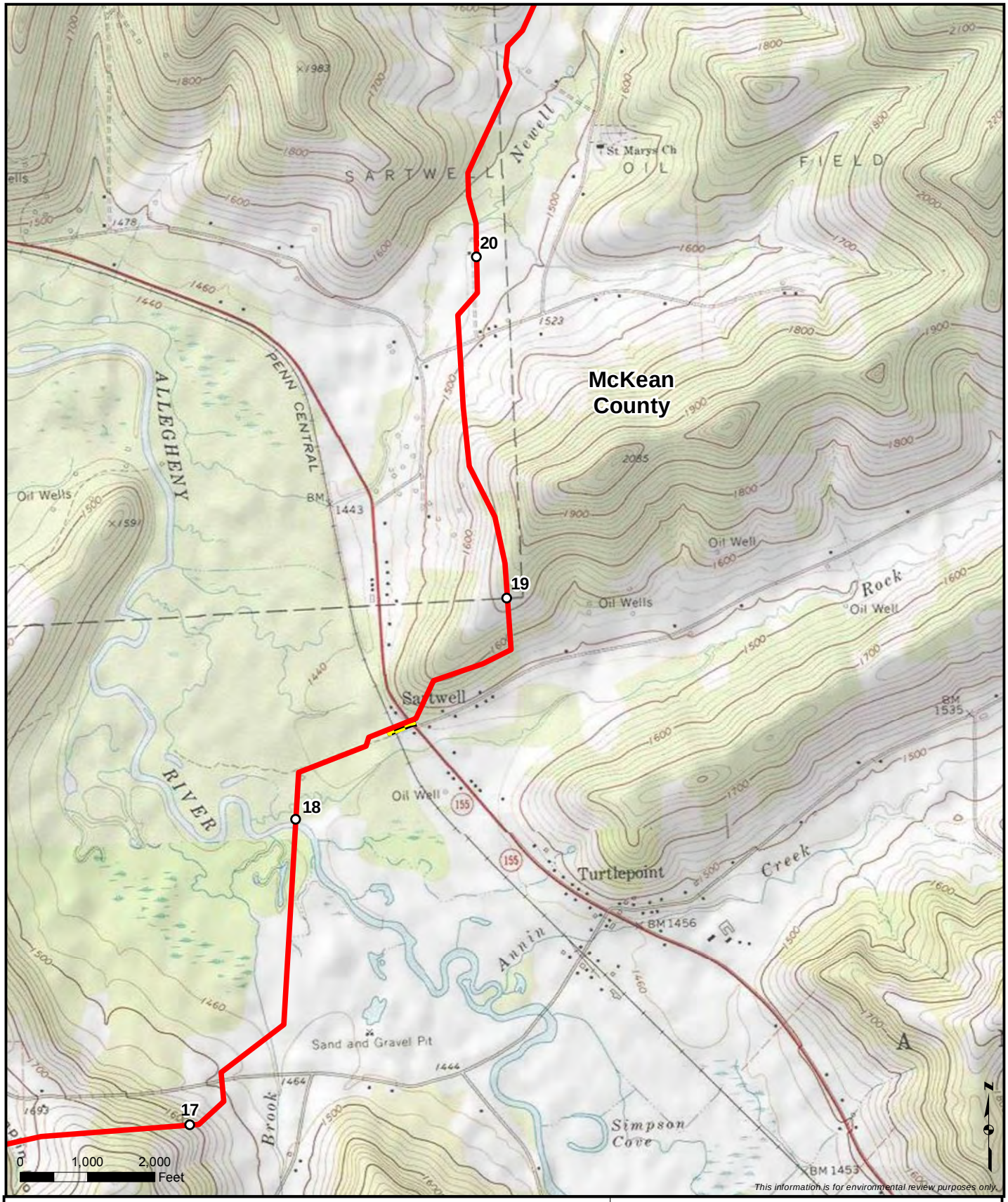

Milepost

Proposed Pipeline

Access Road

Sheet 6 of 32

Appendix A

Northern Access 2016 Project

Allegany, Cattaraugus, Erie, and Niagara Counties, New York

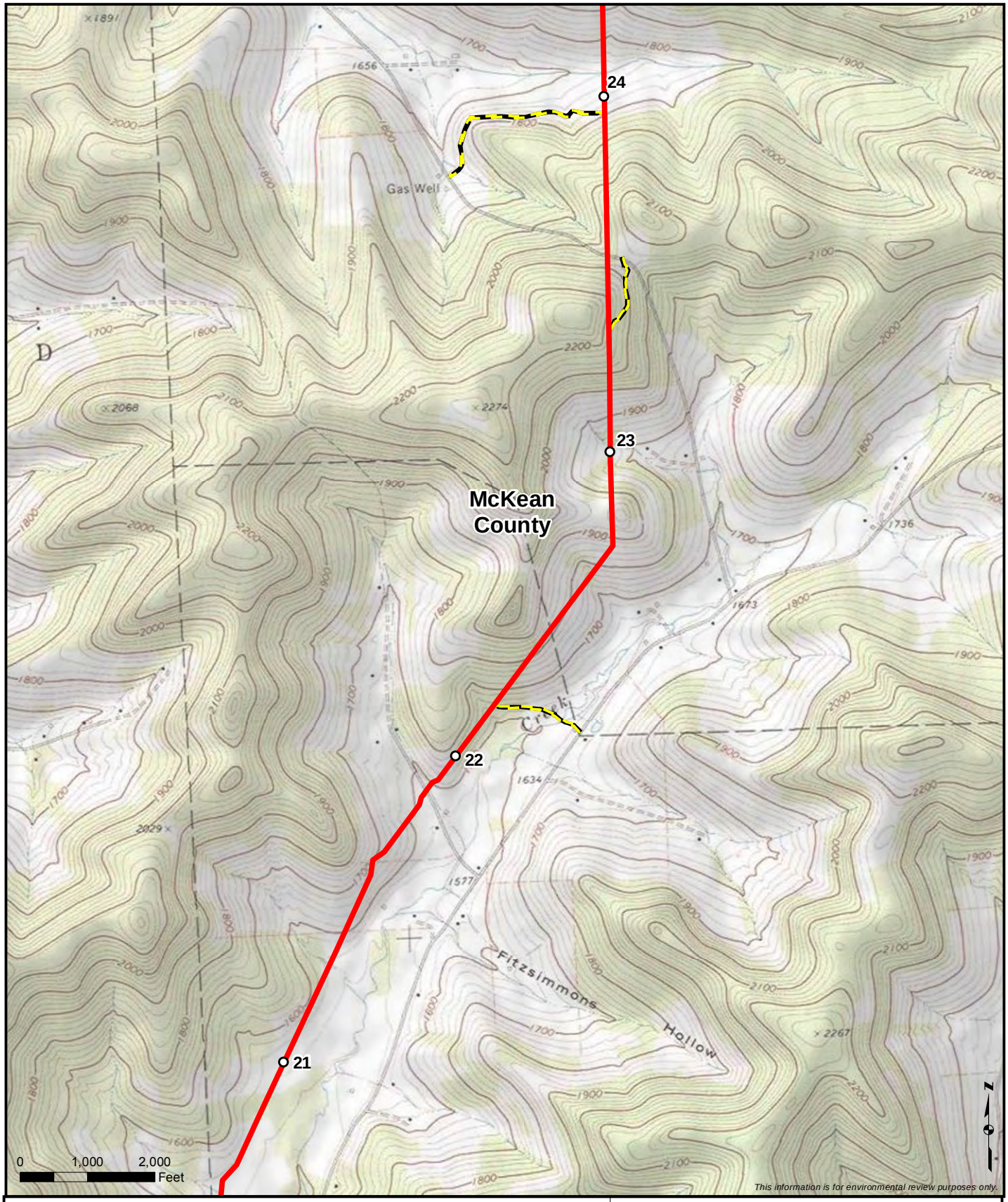

Milepost

Proposed Pipeline

Access Road

Sheet 7 of 32

Appendix A

Northern Access 2016 Project

Allegany, Cattaraugus, Erie, and Niagara Counties, New York

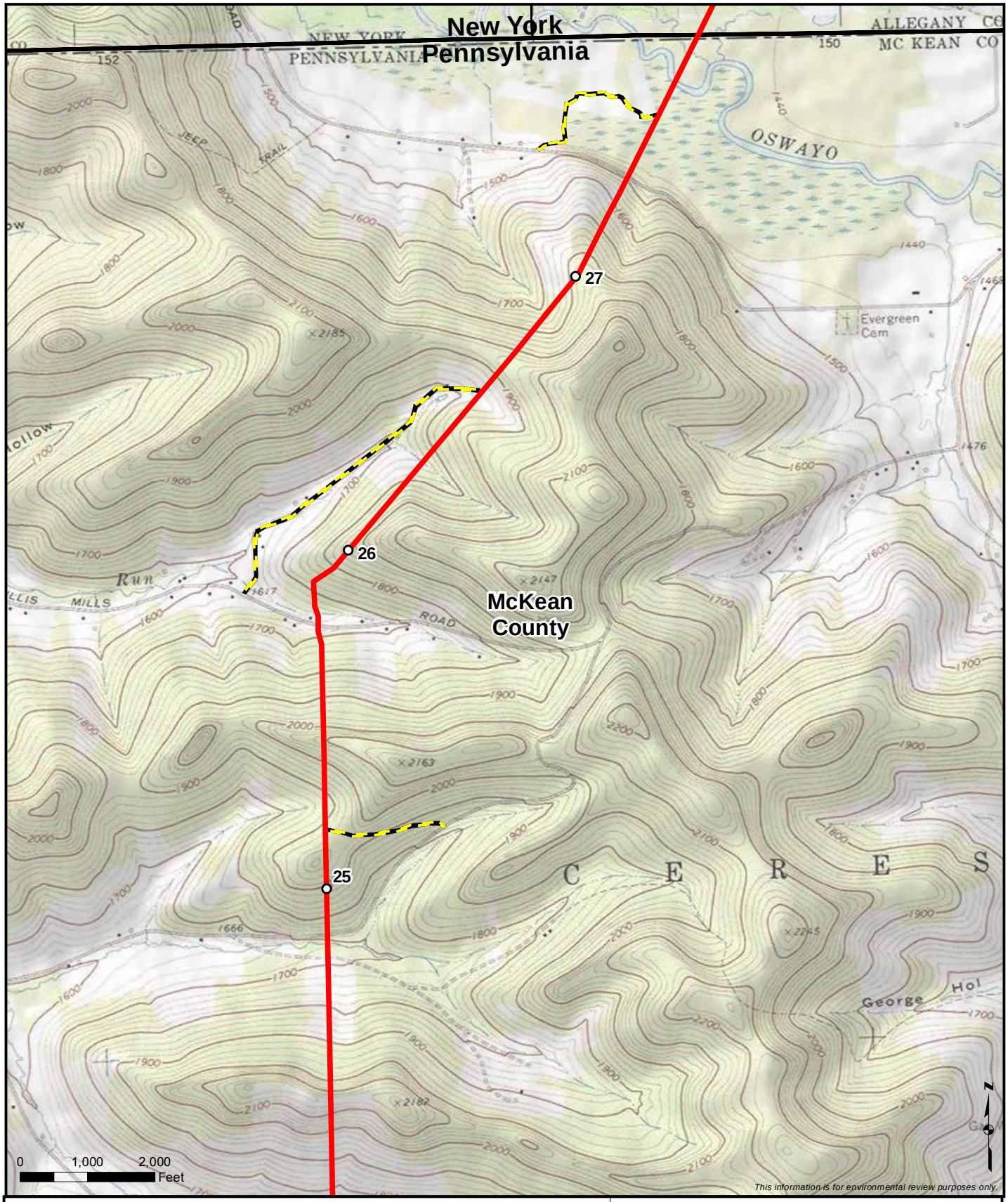

Milepost

Proposed Pipeline

Access Road

Sheet 8 of 32

Appendix A

Northern Access 2016 Project

Allegany, Cattaraugus, Erie, and Niagara Counties, New York

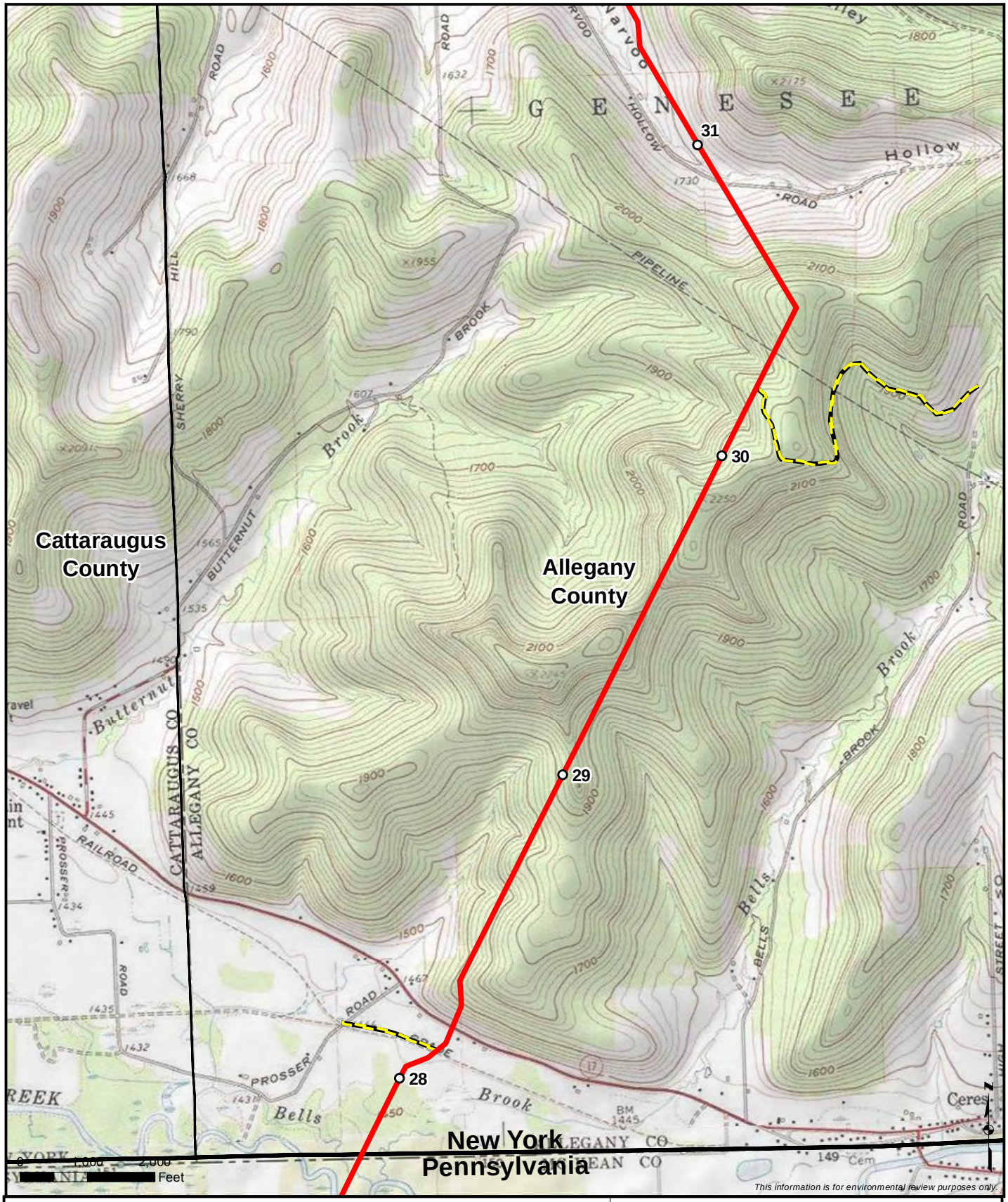

Milepost

Proposed Pipeline

Access Road

Sheet 9 of 32

Appendix A

Northern Access 2016 Project

Allegany, Cattaraugus, Erie, and Niagara Counties, New York

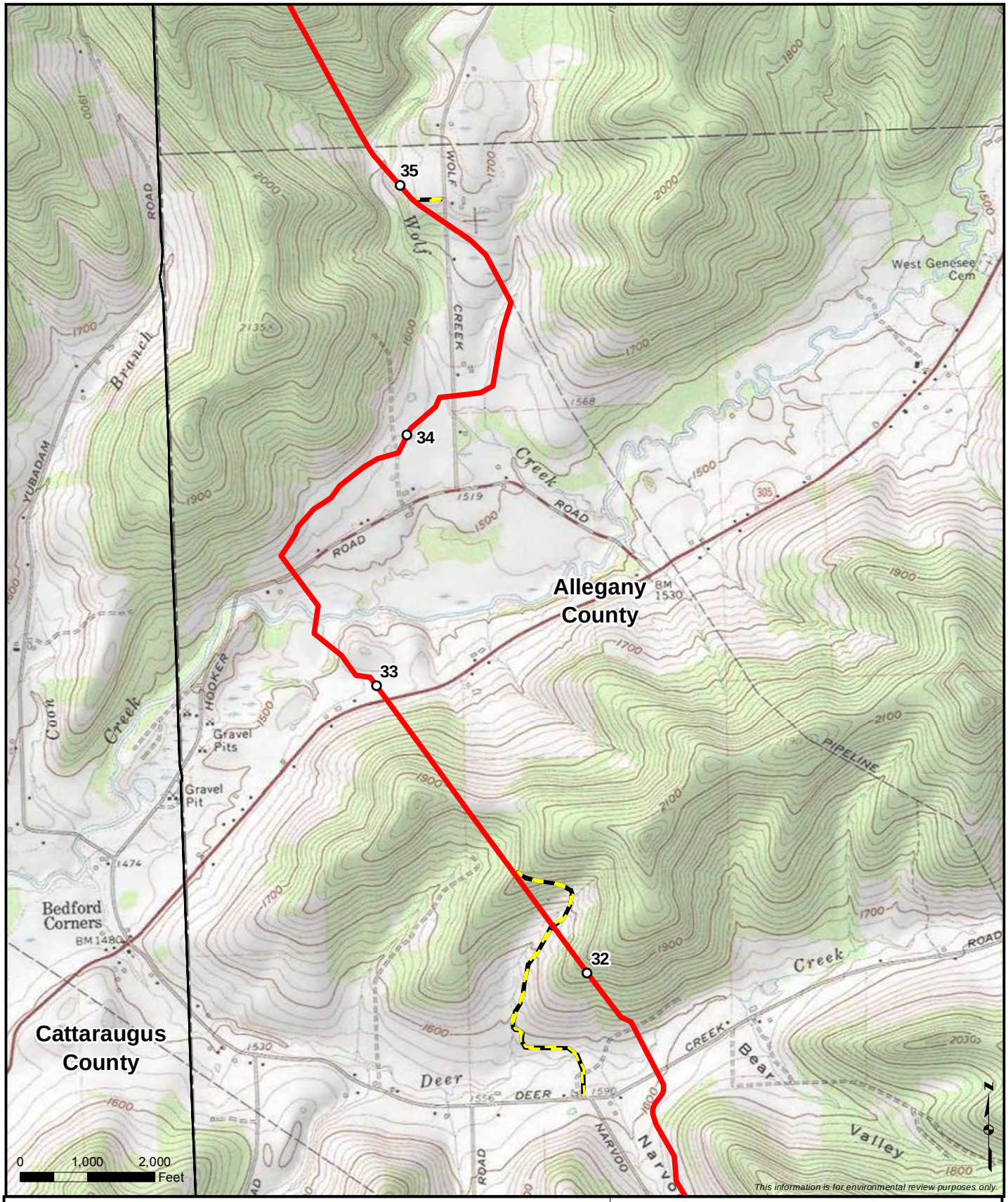

Milepost

Proposed Pipeline

Access Road

Sheet 10 of 32

Appendix A

Northern Access 2016 Project

Allegany, Cattaraugus, Erie, and Niagara Counties, New York

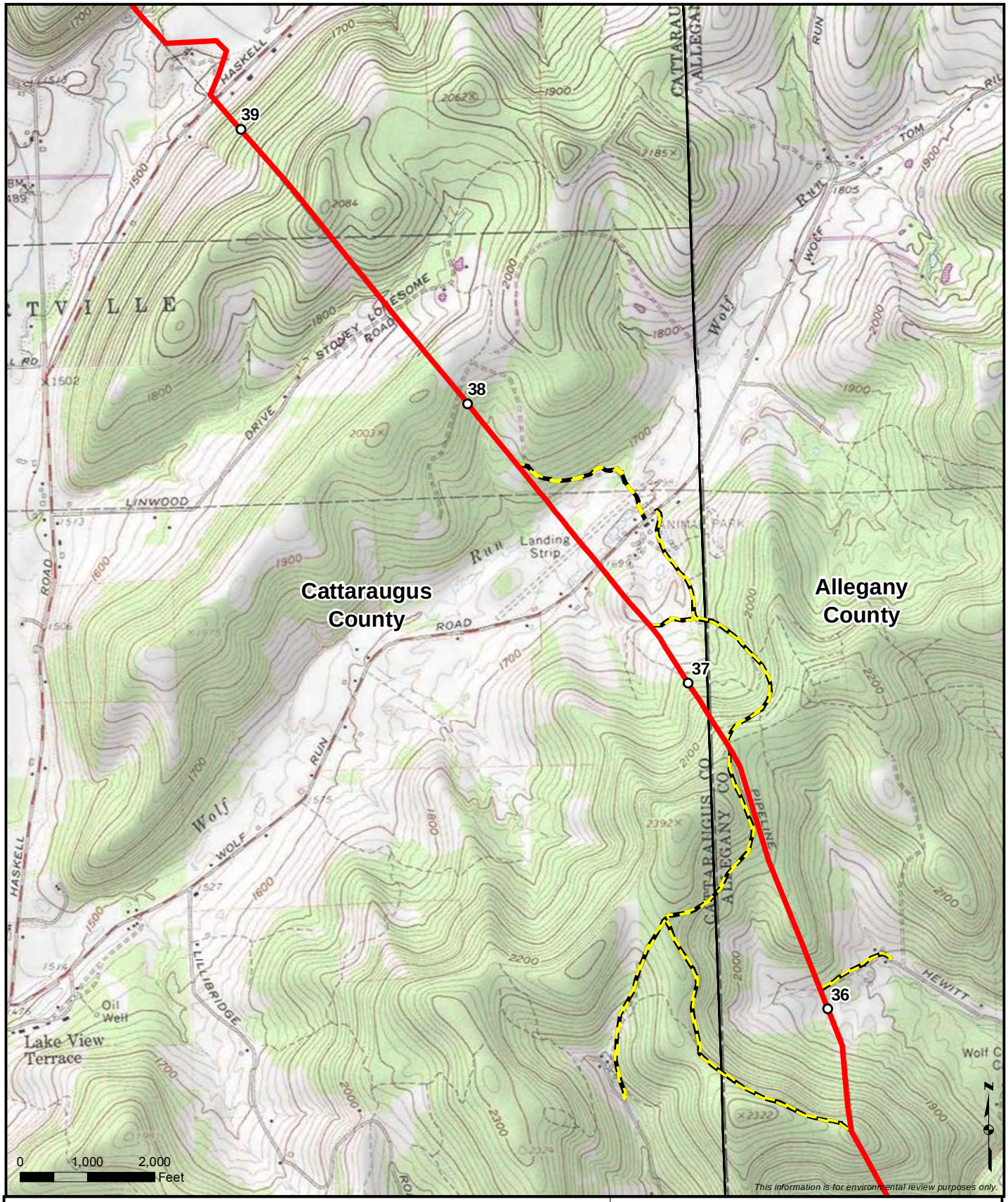

Milepost

Proposed Pipeline

Access Road

Sheet 11 of 32

Appendix A

Northern Access 2016 Project

Allegany, Cattaraugus, Erie, and Niagara Counties, New York

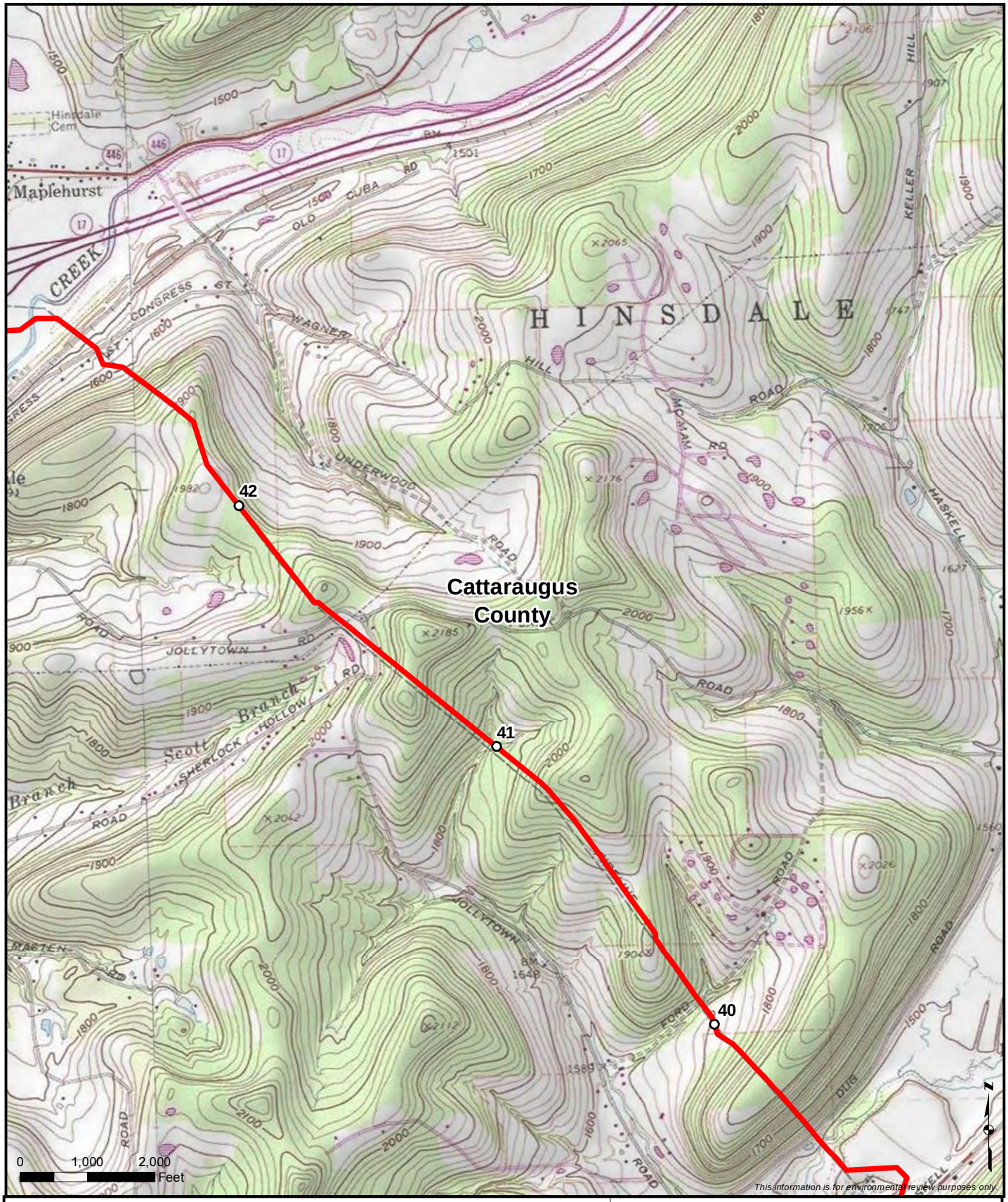

Milepost

Proposed Pipeline

Sheet 12 of 32

Appendix A

Northern Access 2016 Project

Allegany, Cattaraugus, Erie, and Niagara Counties, New York

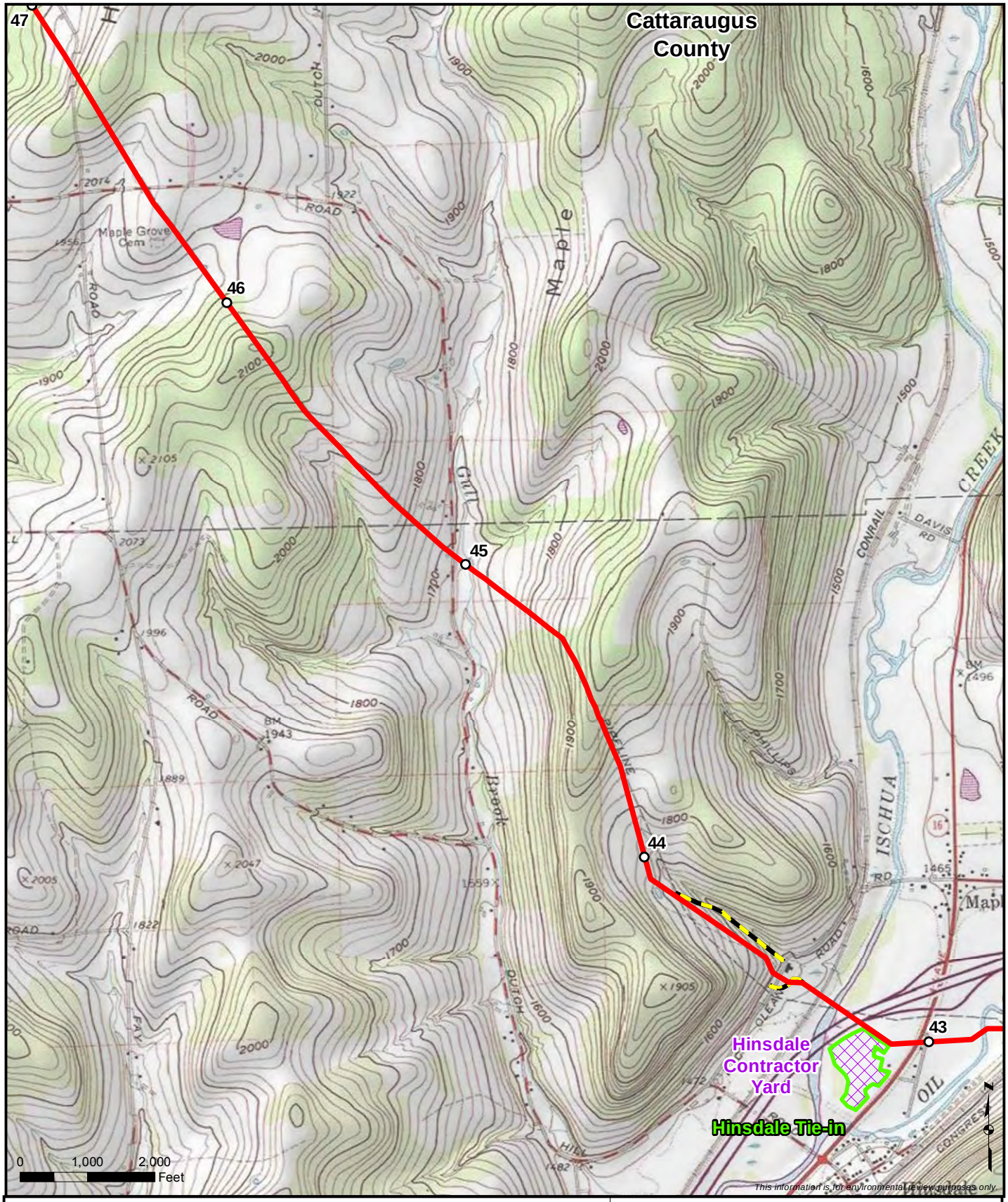

Milepost

Proposed Pipeline

Aboveground Facilities

Contractor Yards

Access Road

Sheet 13 of 32

Appendix A

Northern Access 2016 Project

Allegany, Cattaraugus, Erie, and Niagara Counties, New York

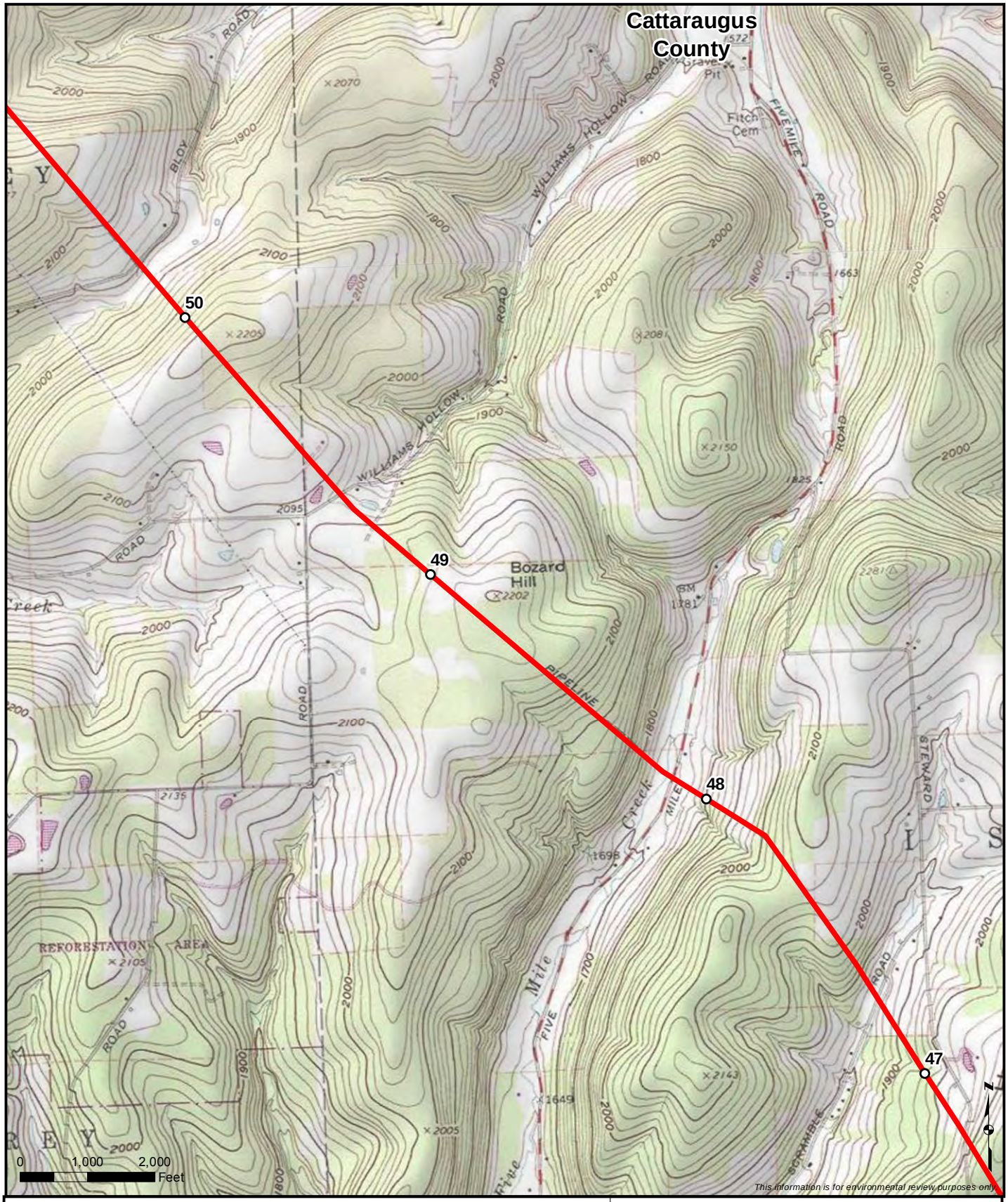

Milepost

Proposed Pipeline

Sheet 14 of 32

Appendix A

Northern Access 2016 Project

Allegany, Cattaraugus, Erie, and Niagara Counties, New York

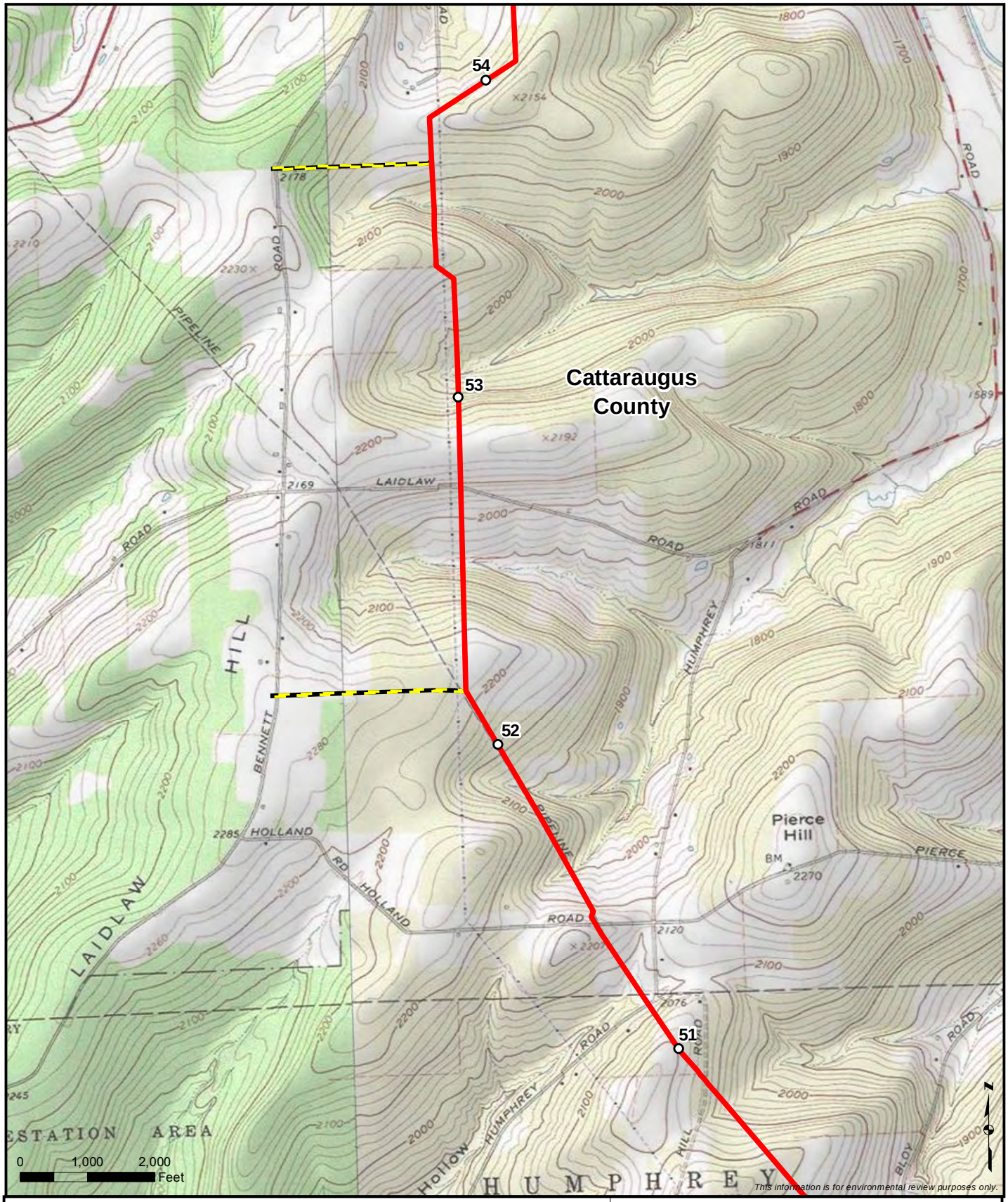

Milepost

Proposed Pipeline

Access Road

Sheet 15 of 32

Appendix A

Northern Access 2016 Project

Allegany, Cattaraugus, Erie, and Niagara Counties, New York

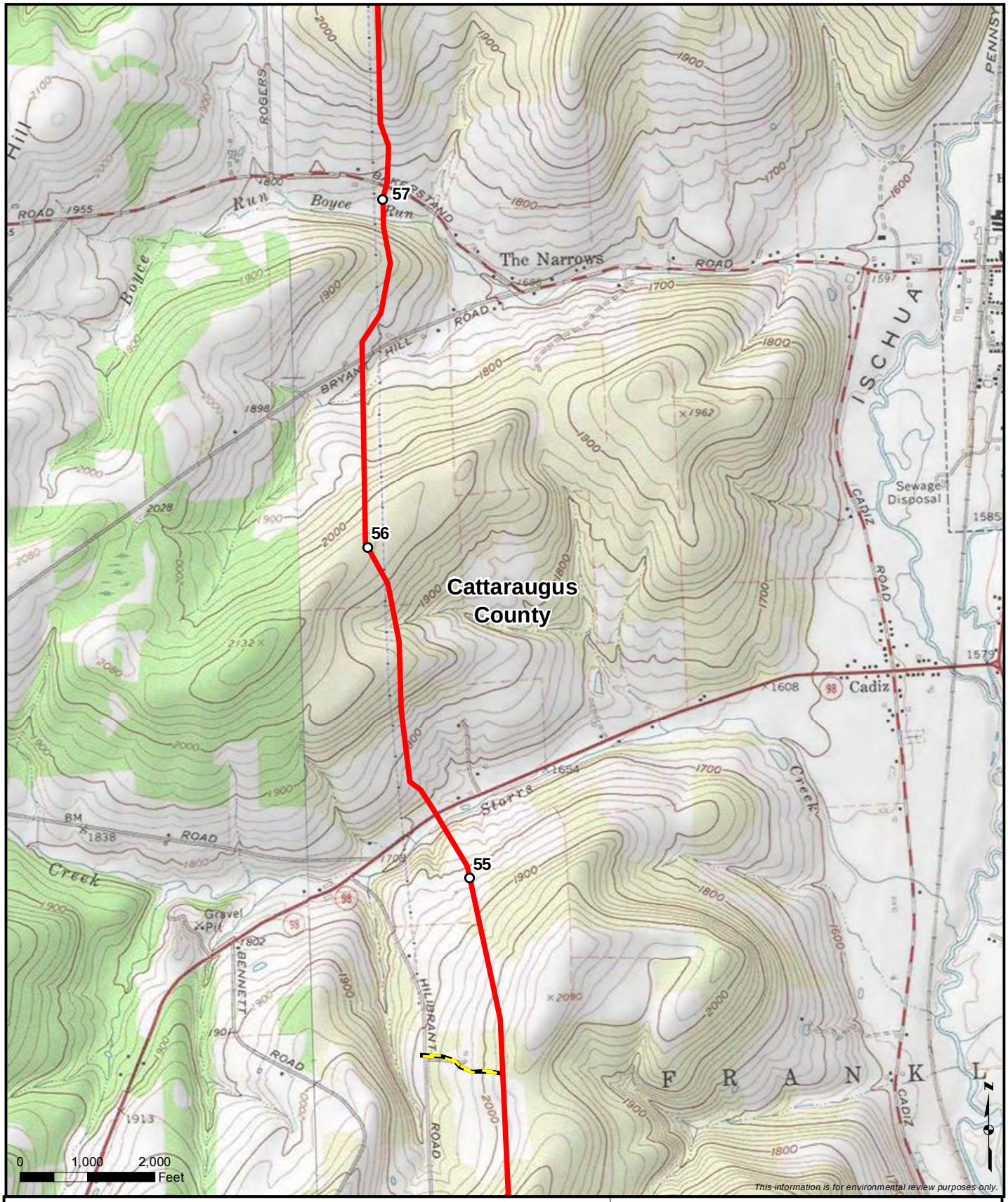

Milepost

Proposed Pipeline

Access Road

Sheet 16 of 32

Appendix A

Northern Access 2016 Project

Allegany, Cattaraugus, Erie, and Niagara Counties, New York

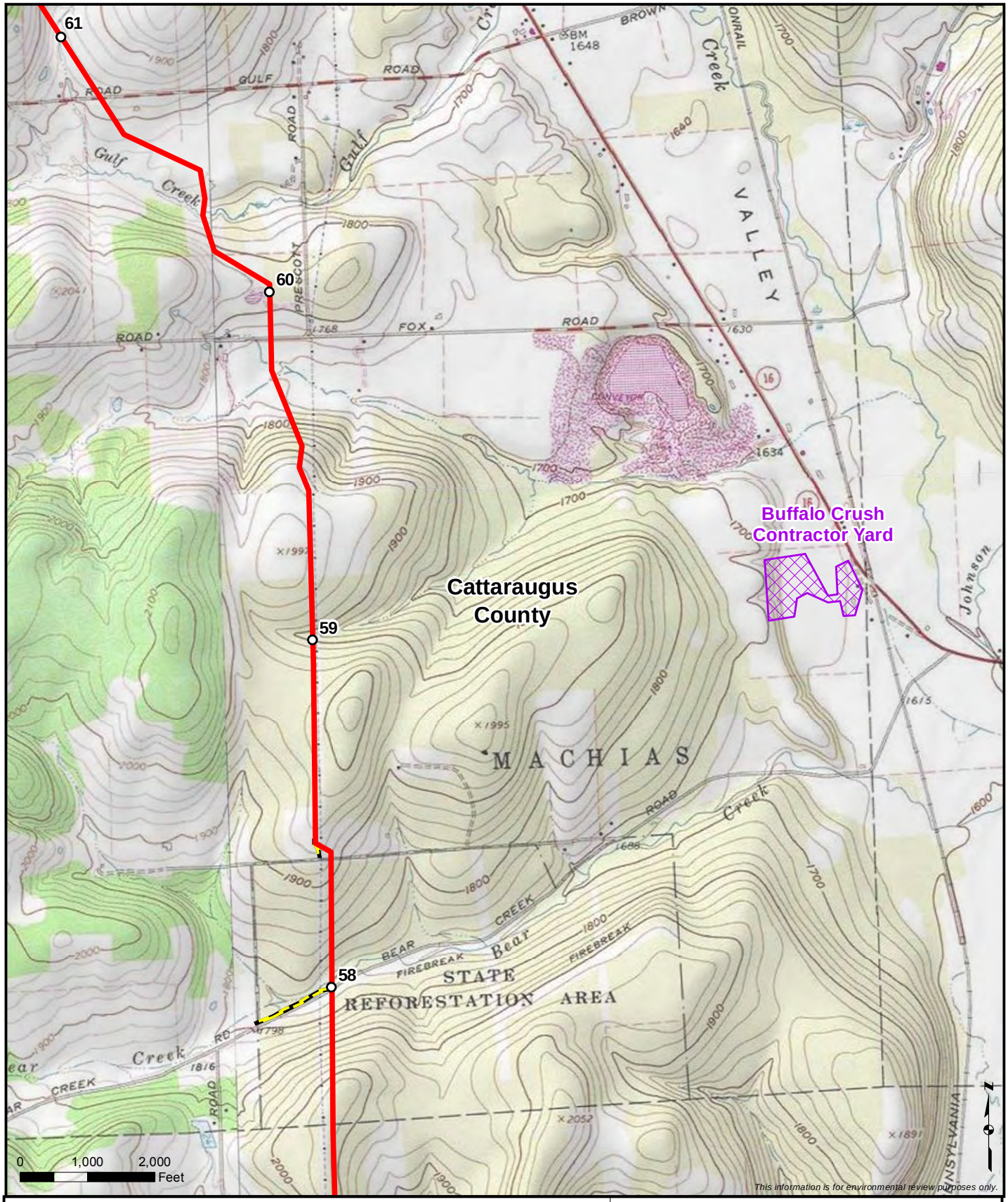

Milepost

Proposed Pipeline

Contractor Yards

Access Road

Sheet 17 of 32

Appendix A

Northern Access 2016 Project

Allegany, Cattaraugus, Erie, and Niagara Counties, New York

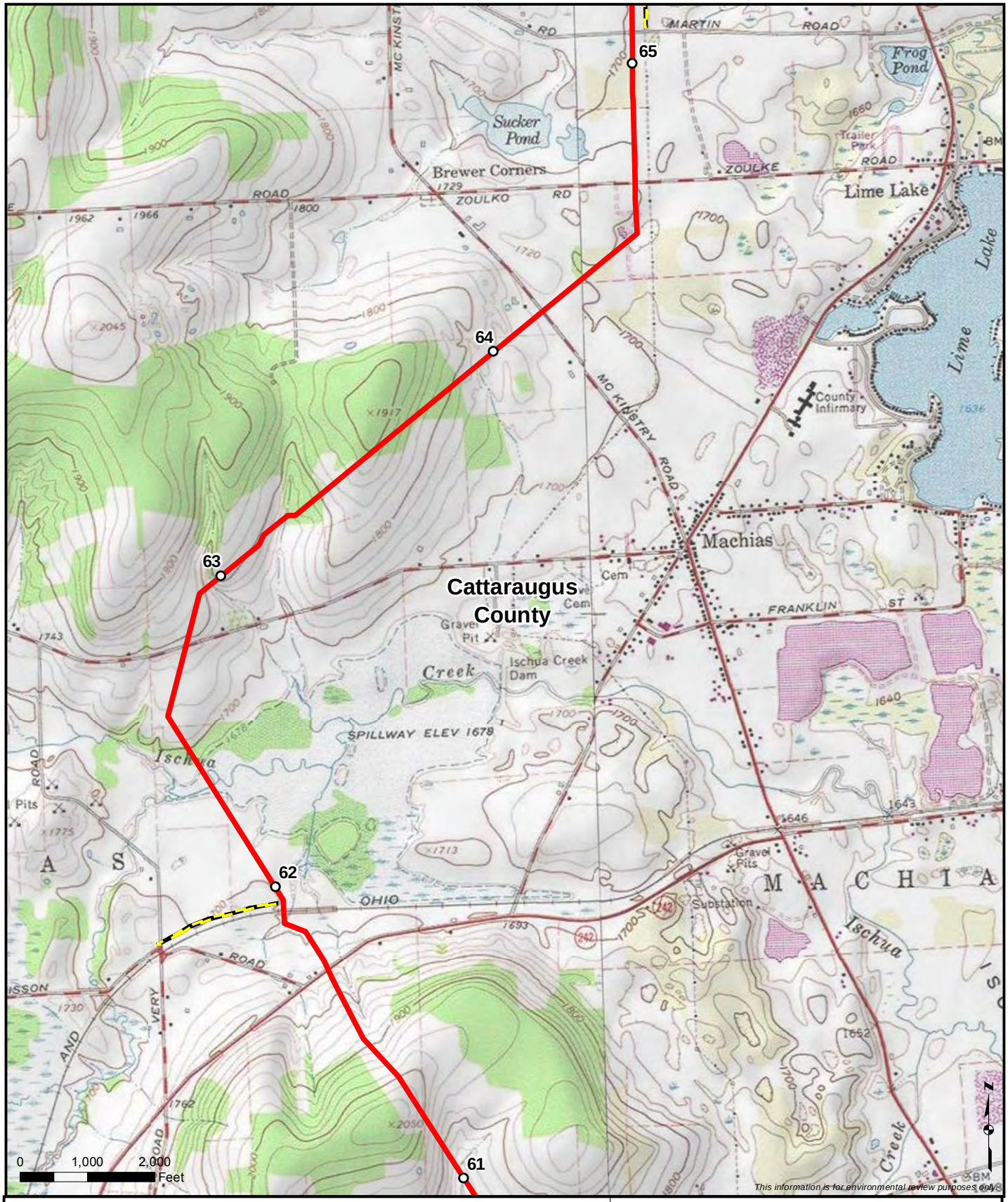

Milepost

Proposed Pipeline

Access Road

Sheet 18 of 32

Appendix A

Northern Access 2016 Project

Allegany, Cattaraugus, Erie, and Niagara Counties, New York

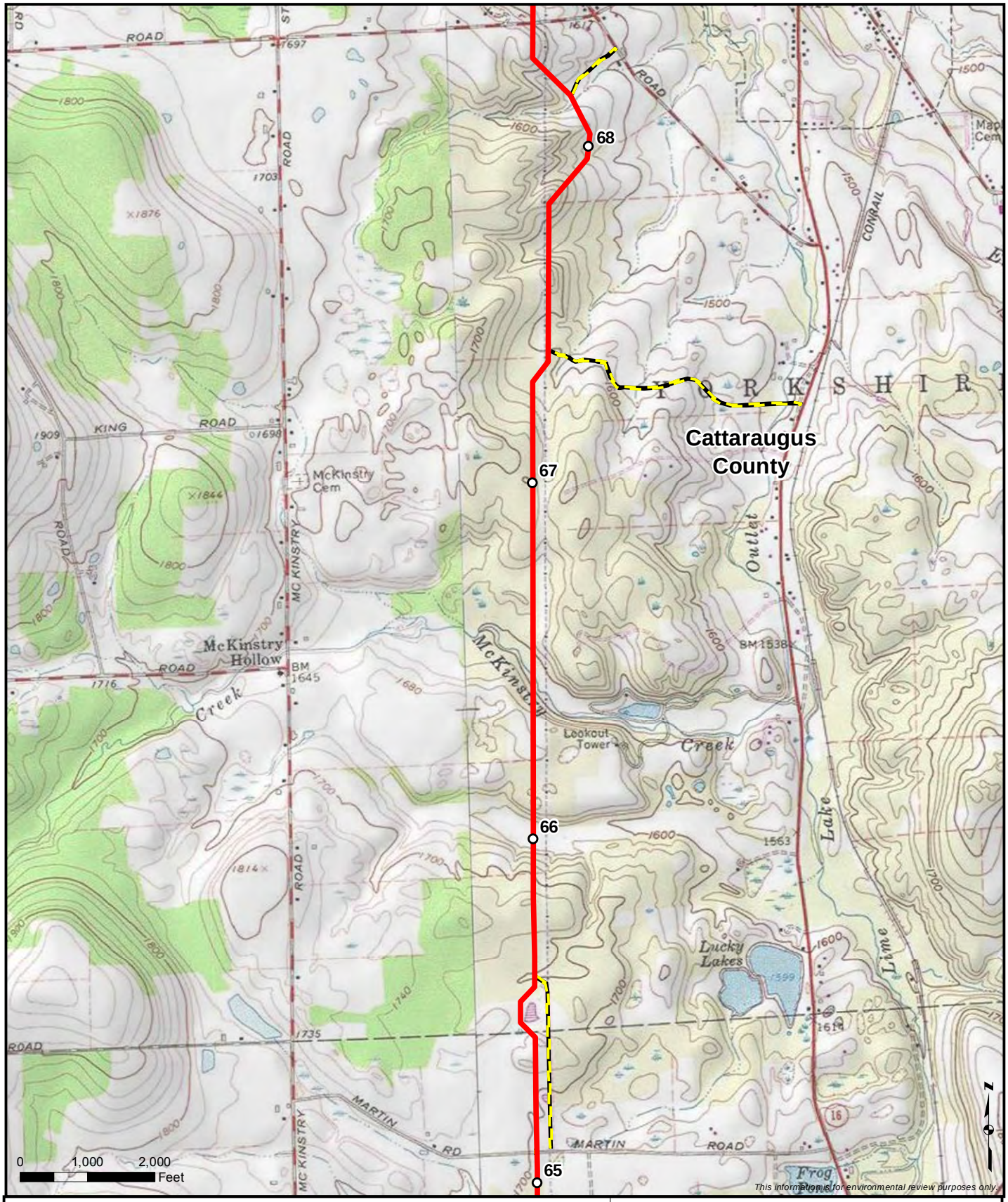

Milepost

Proposed Pipeline

Access Road

Sheet 19 of 32

Appendix A

Northern Access 2016 Project

Allegany, Cattaraugus, Erie, and Niagara Counties, New York

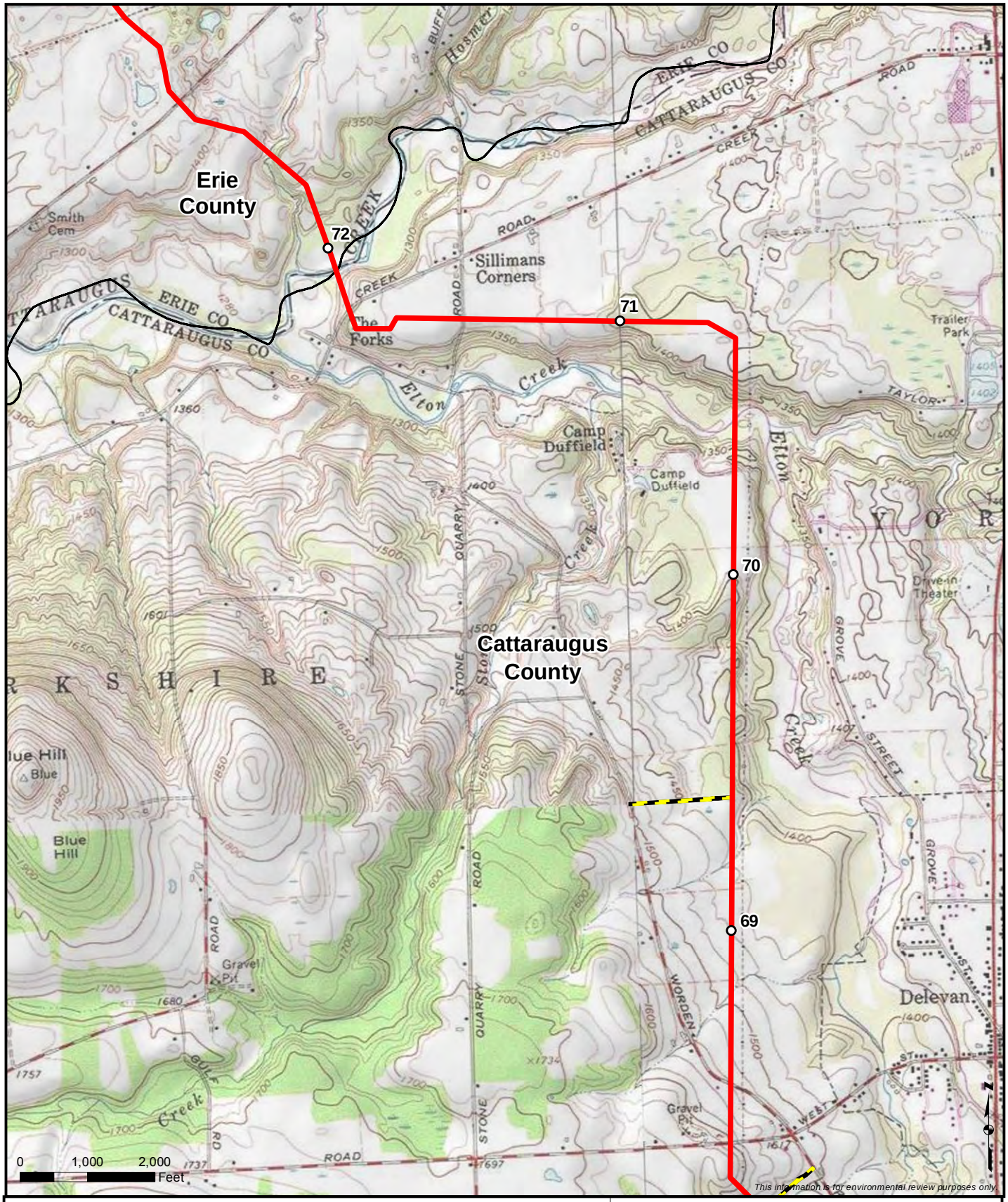

Milepost

Proposed Pipeline

Access Road

Sheet 20 of 32

Appendix A

Northern Access 2016 Project

Allegany, Cattaraugus, Erie, and Niagara Counties, New York

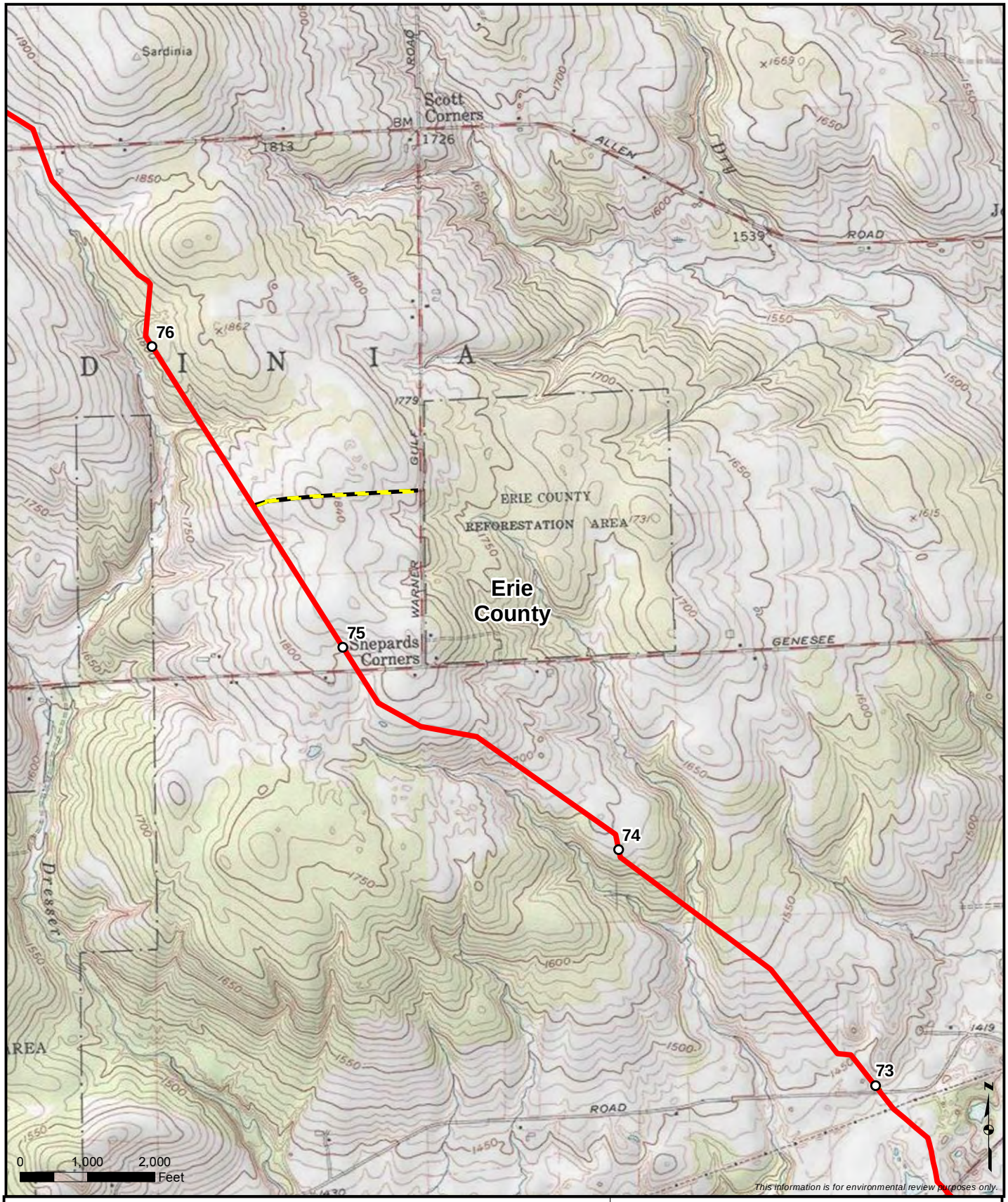

Milepost

Proposed Pipeline

Access Road

Sheet 21 of 32

Appendix A

Northern Access 2016 Project

Allegany, Cattaraugus, Erie, and Niagara Counties, New York

Milepost

Proposed Pipeline

Sheet 22 of 32

Appendix A

Northern Access 2016 Project

Allegany, Cattaraugus, Erie, and Niagara Counties, New York

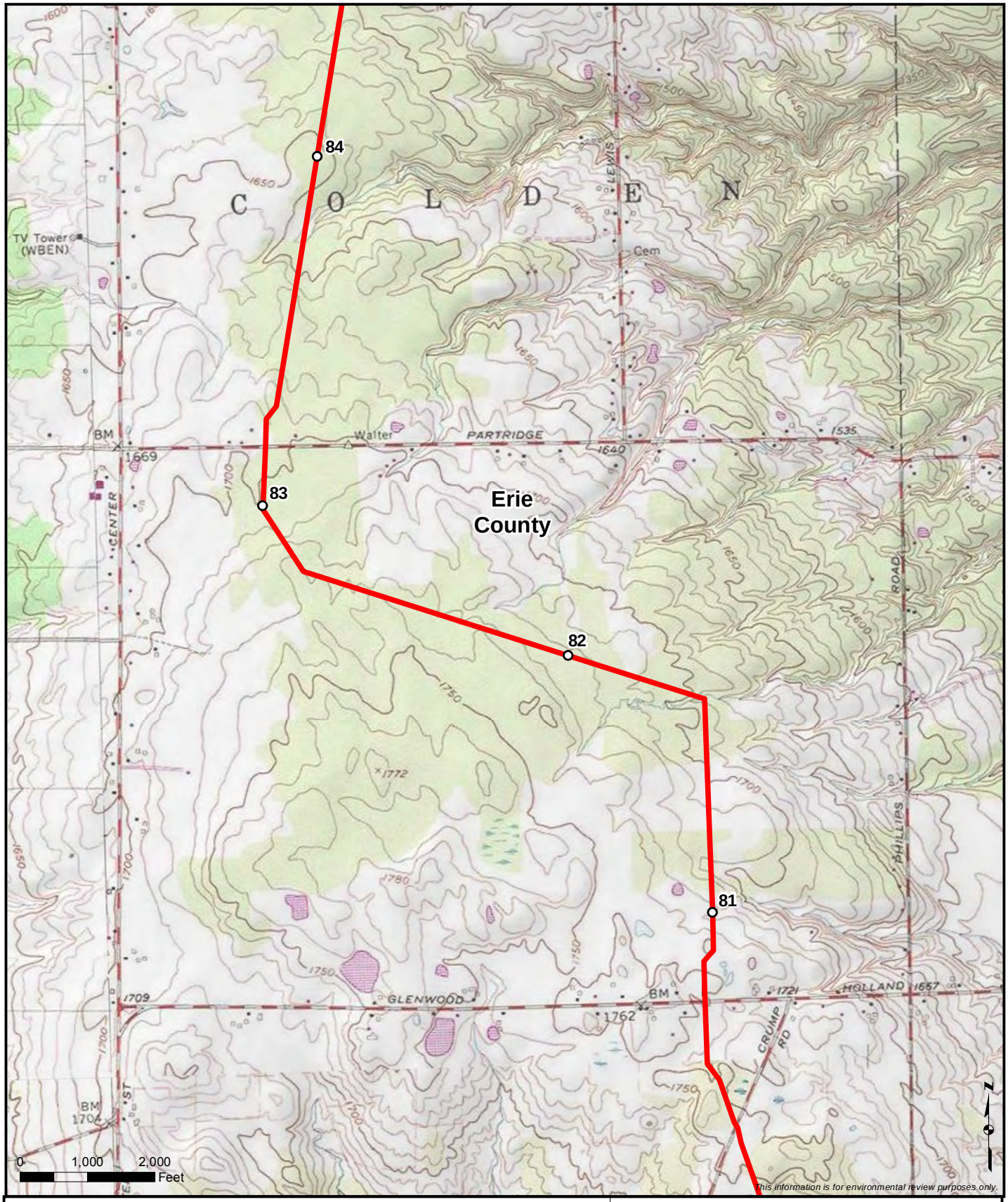

Milepost

Proposed Pipeline

Access Road

Sheet 23 of 32

Appendix A

Northern Access 2016 Project

Allegany, Cattaraugus, Erie, and Niagara Counties, New York

Milepost

Proposed Pipeline

Access Road

Sheet 24 of 32

Appendix A

Northern Access 2016 Project

Allegany, Cattaraugus, Erie, and Niagara Counties, New York

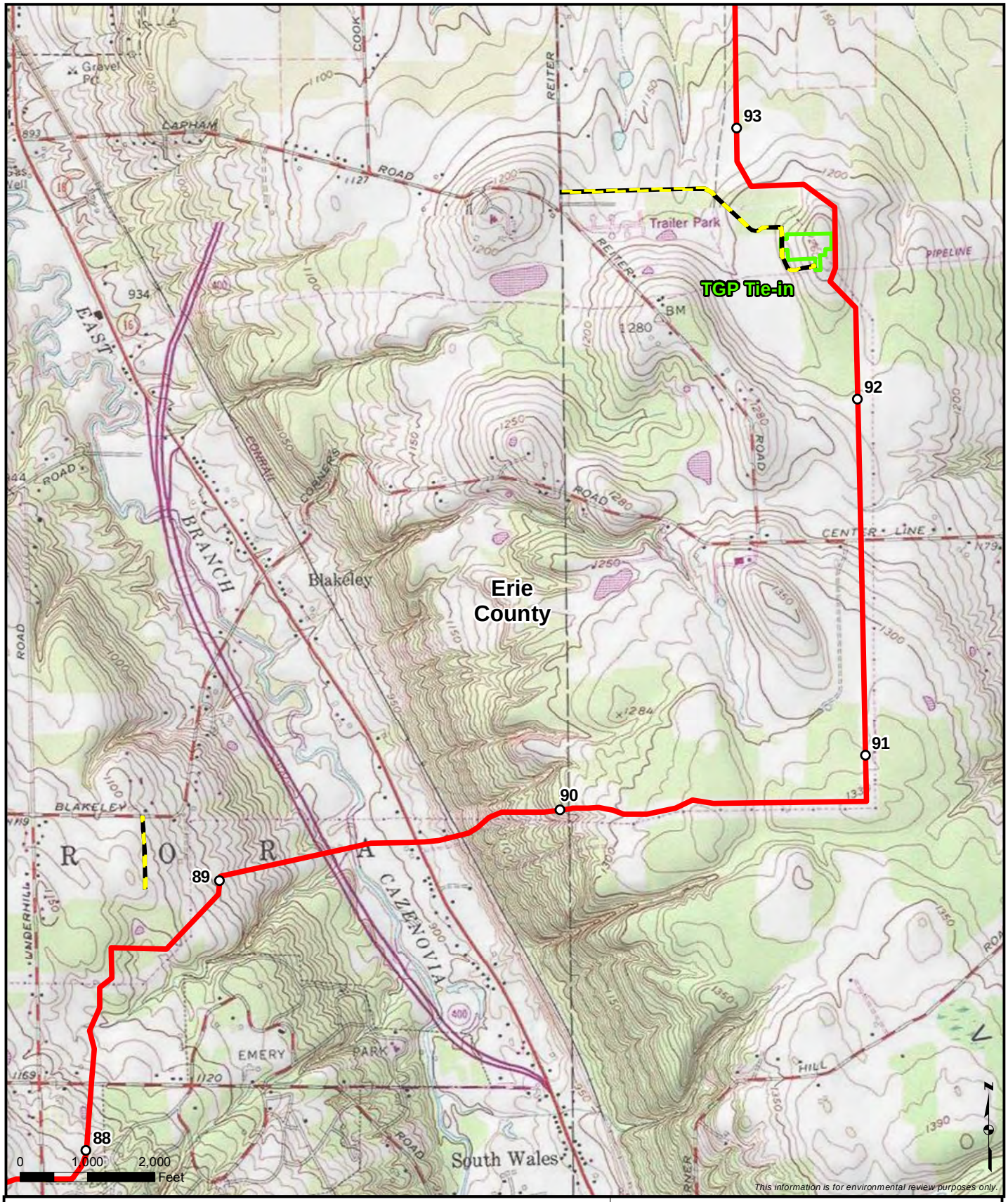

Milepost

Proposed Pipeline

Aboveground Facilities

Access Road

Sheet 25 of 32

Appendix A

Northern Access 2016 Project

Allegany, Cattaraugus, Erie, and Niagara Counties, New York

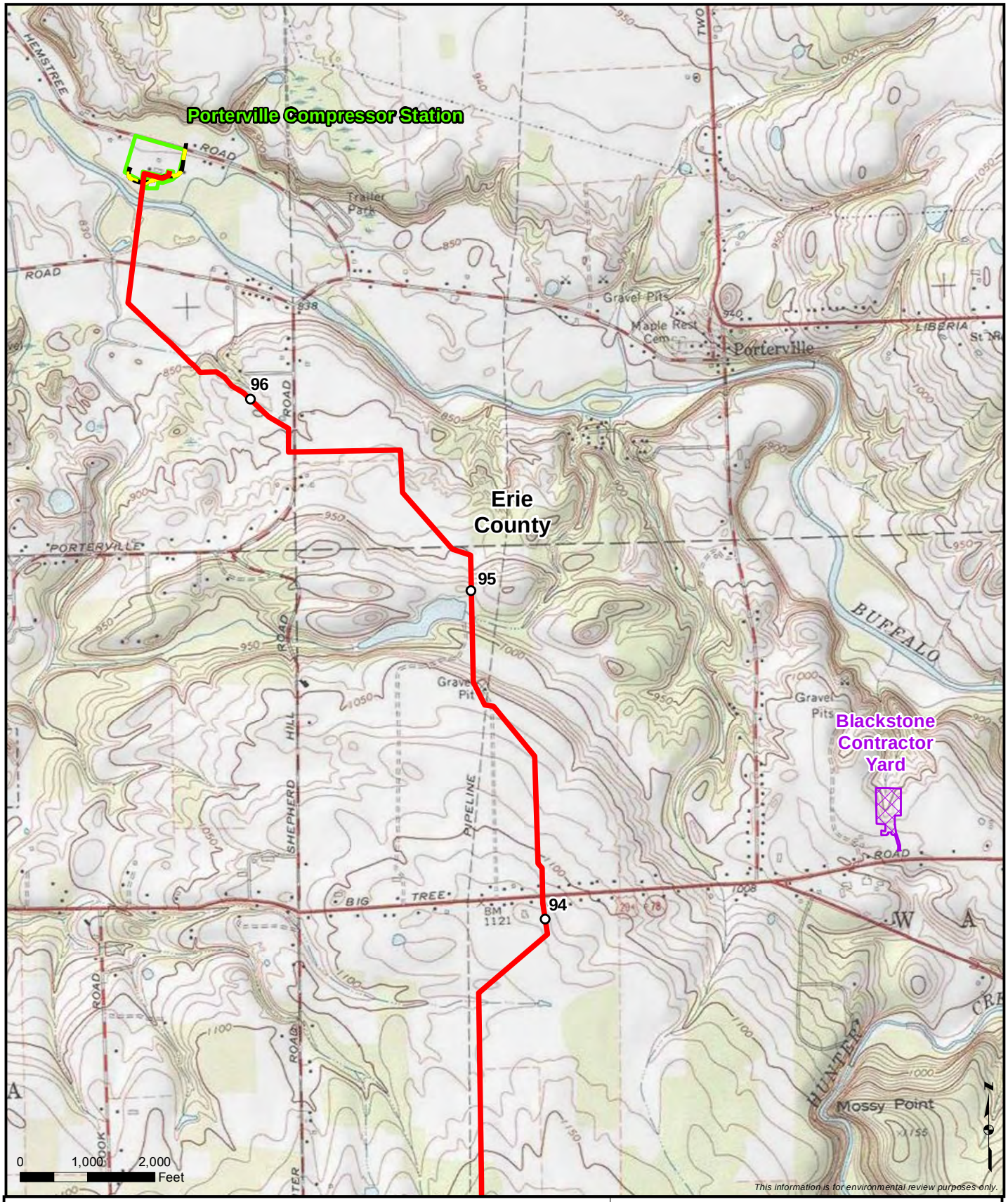

Milepost
Proposed Pipeline
Aboveground Facilities
Contractor Yards
Access Road

Sheet 26 of 32

Appendix A
Northern Access 2016 Project
Allegany, Cattaraugus, Erie, and Niagara Counties, New York

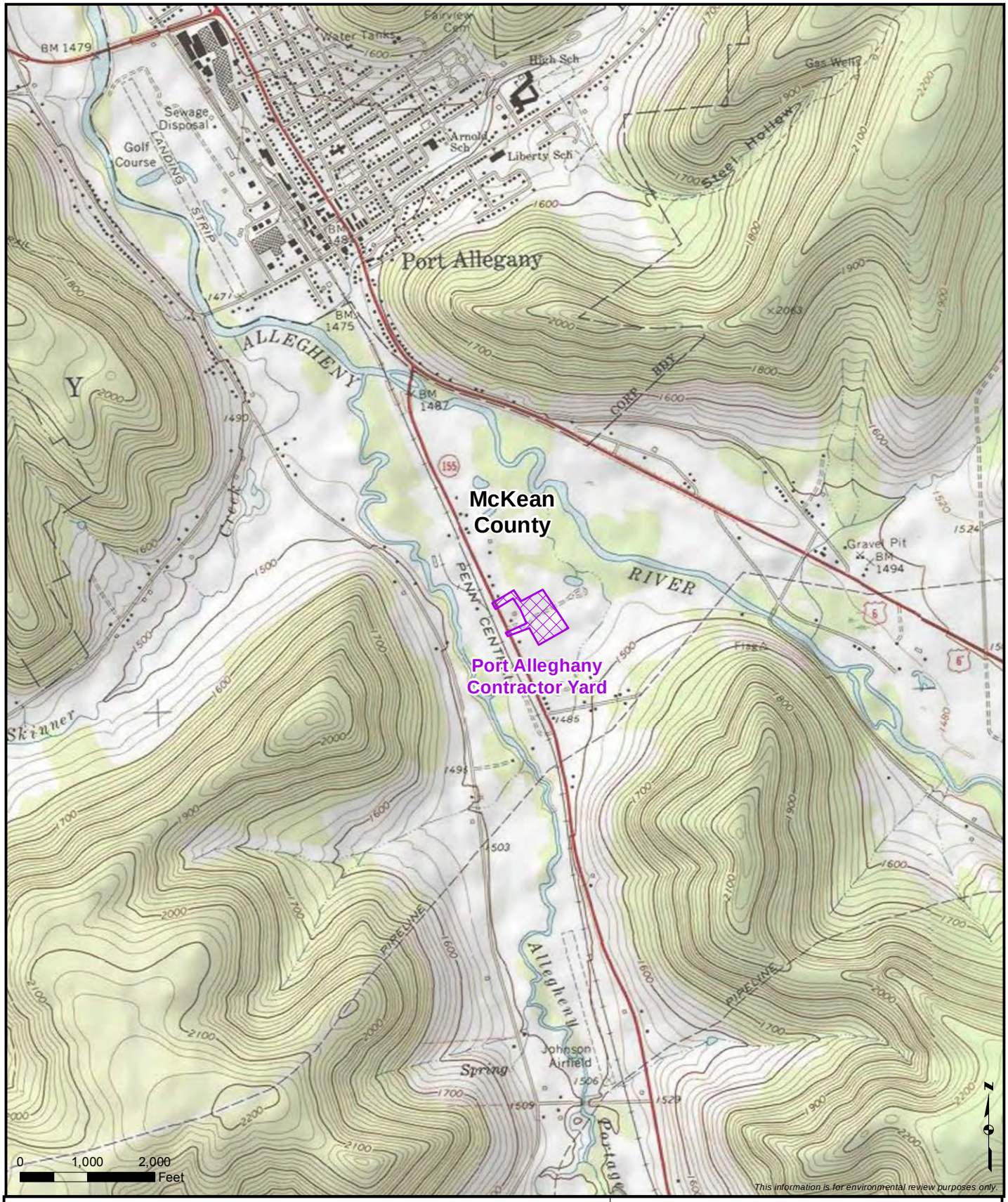

Contractor Yards

Sheet 27 of 32

Appendix A
Northern Access 2016 Project
Allegany, Cattaraugus, Erie, and Niagara Counties, New York

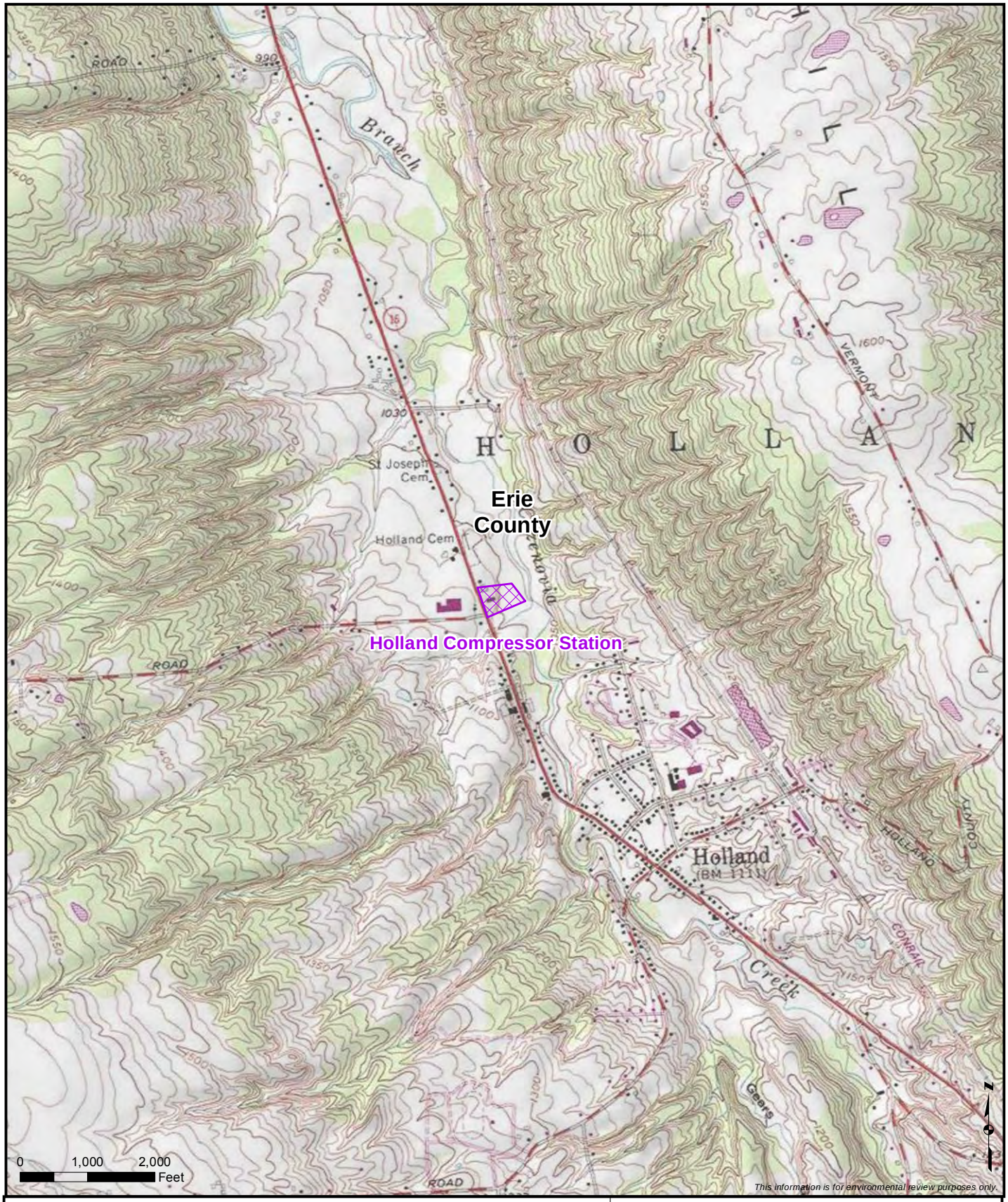

Contractor Yards

Sheet 28 of 32

Appendix A
Northern Access 2016 Project
Allegany, Cattaraugus, Erie,
and Niagara Counties, New York

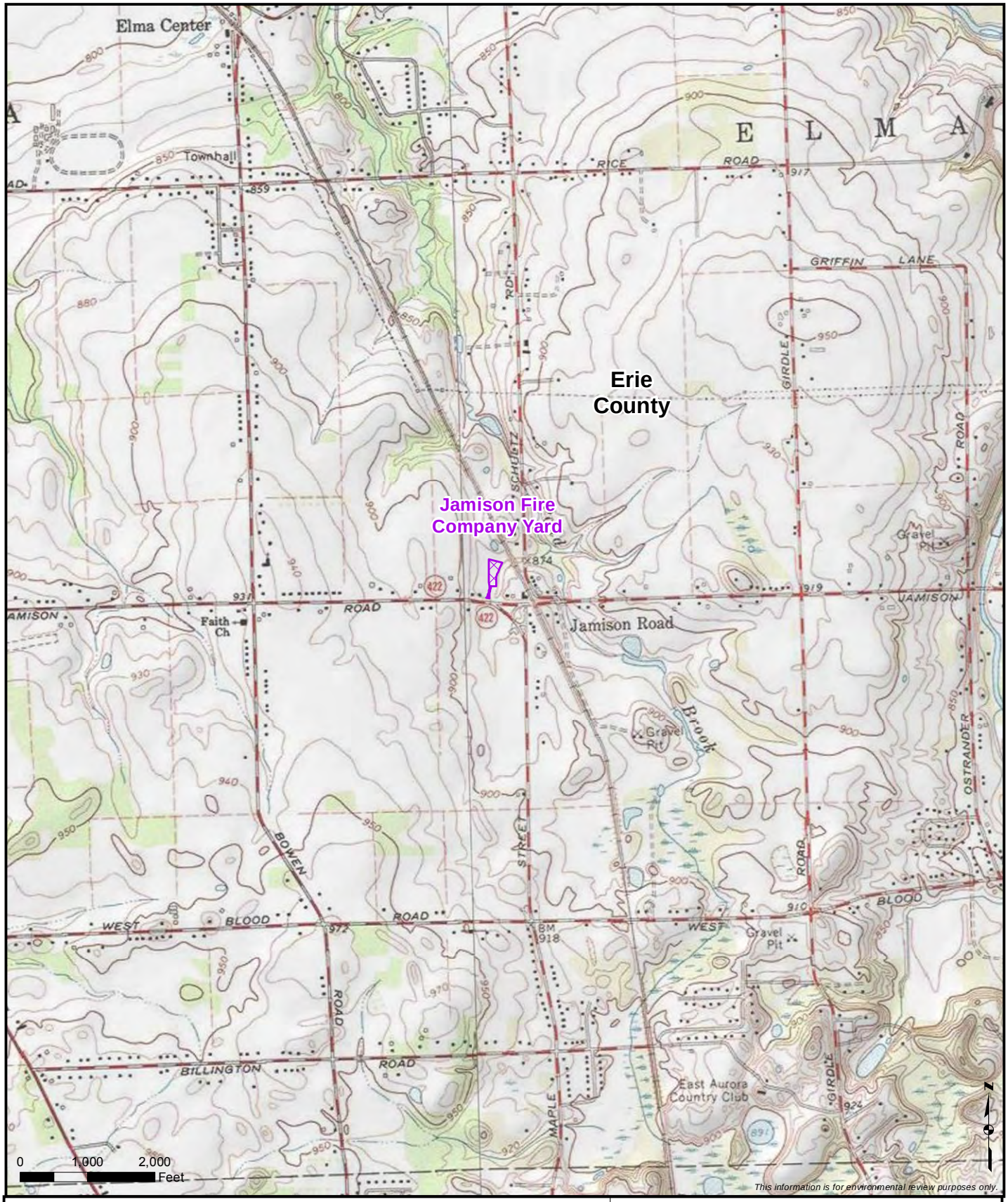

Contractor Yards

Sheet 29 of 32

Appendix A
Northern Access 2016 Project
Allegany, Cattaraugus, Erie, and Niagara Counties, New York

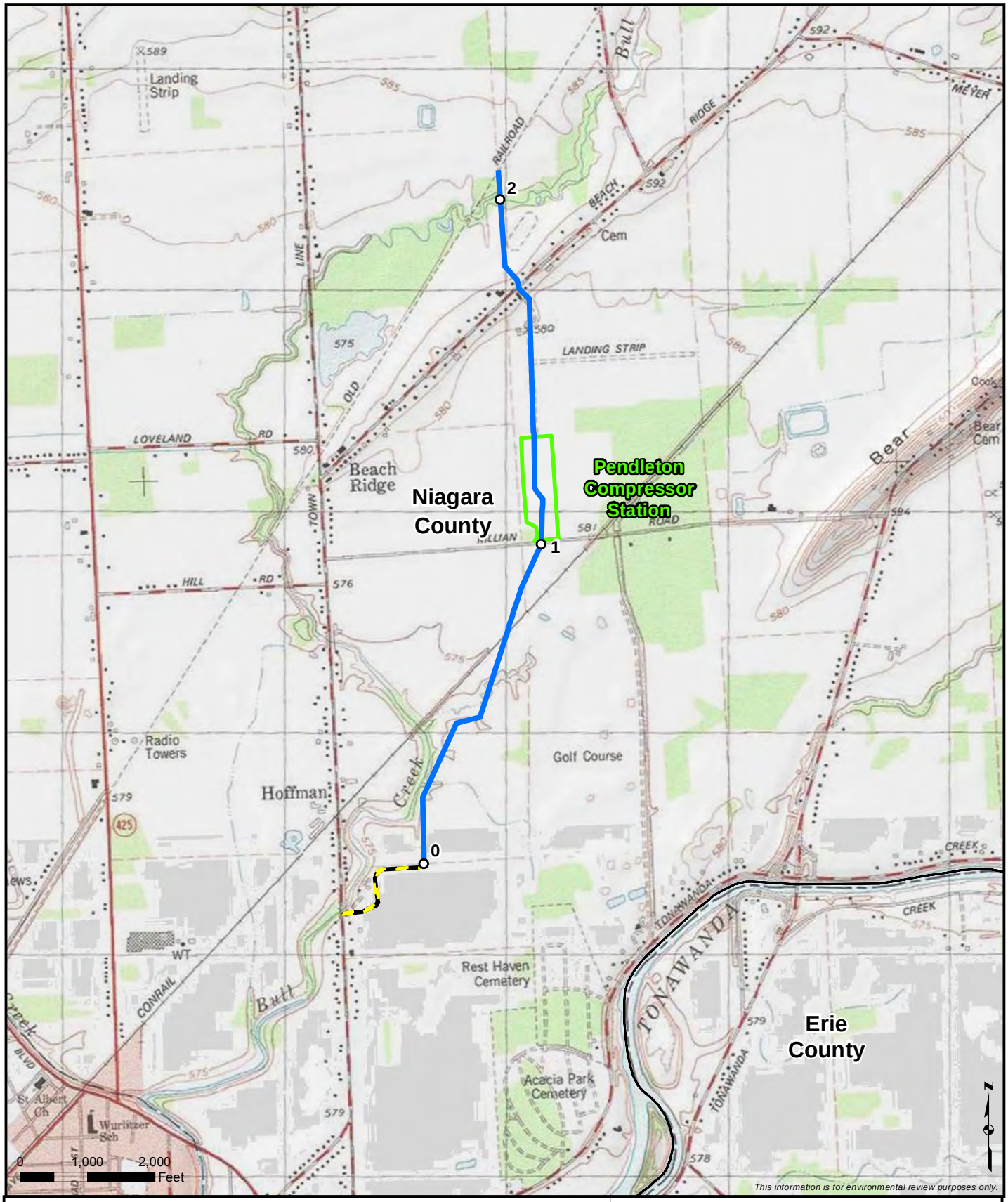

Milepost

Proposed EMP-03

Aboveground Facilities

Access Road

Sheet 30 of 32

Appendix A

Northern Access 2016 Project

Allegany, Cattaraugus, Erie, and Niagara Counties, New York

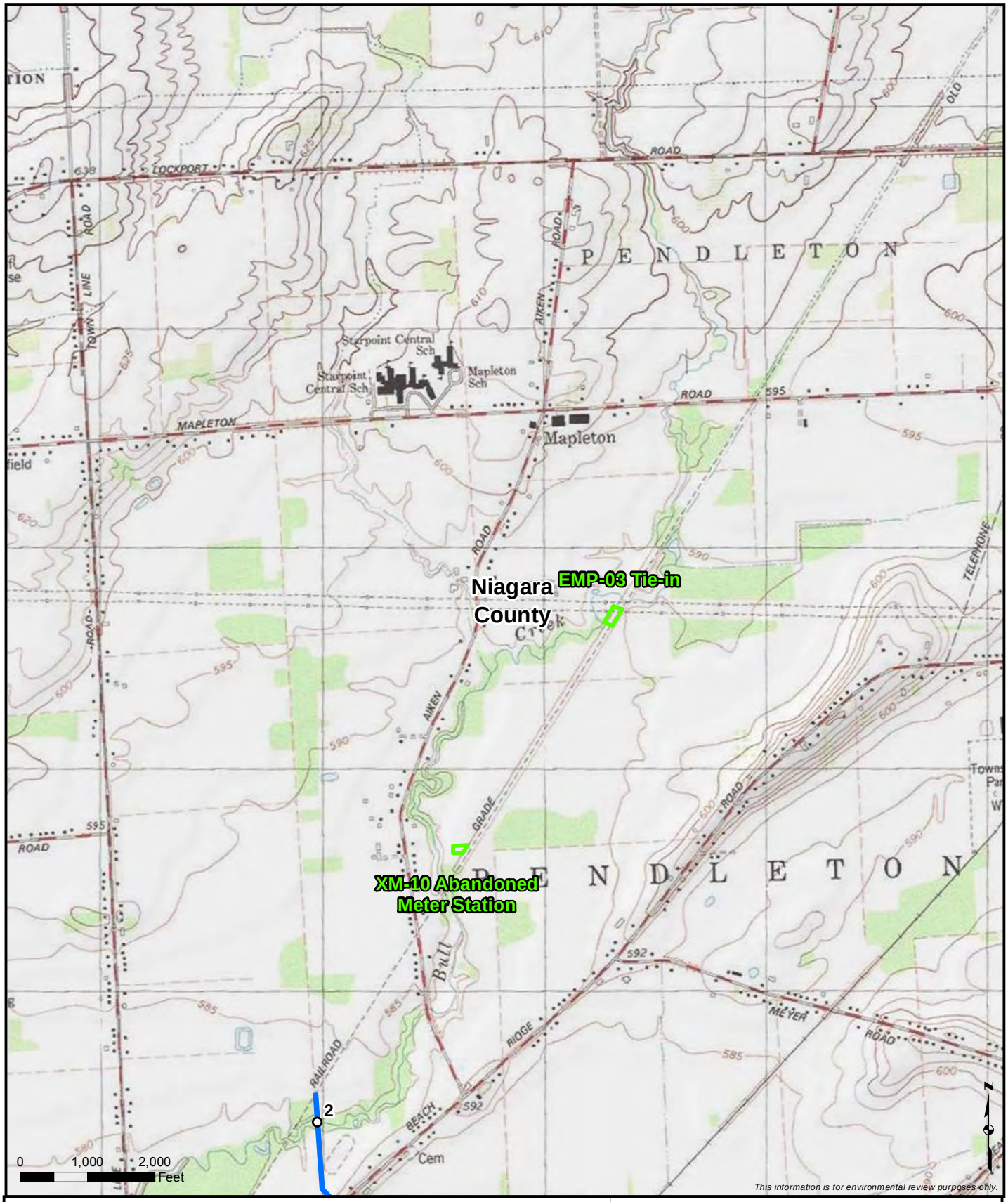

Milepost

Proposed EMP-03

Aboveground Facilities

Sheet 31 of 32

Appendix A

Northern Access 2016 Project

Allegany, Cattaraugus, Erie, and Niagara Counties, New York

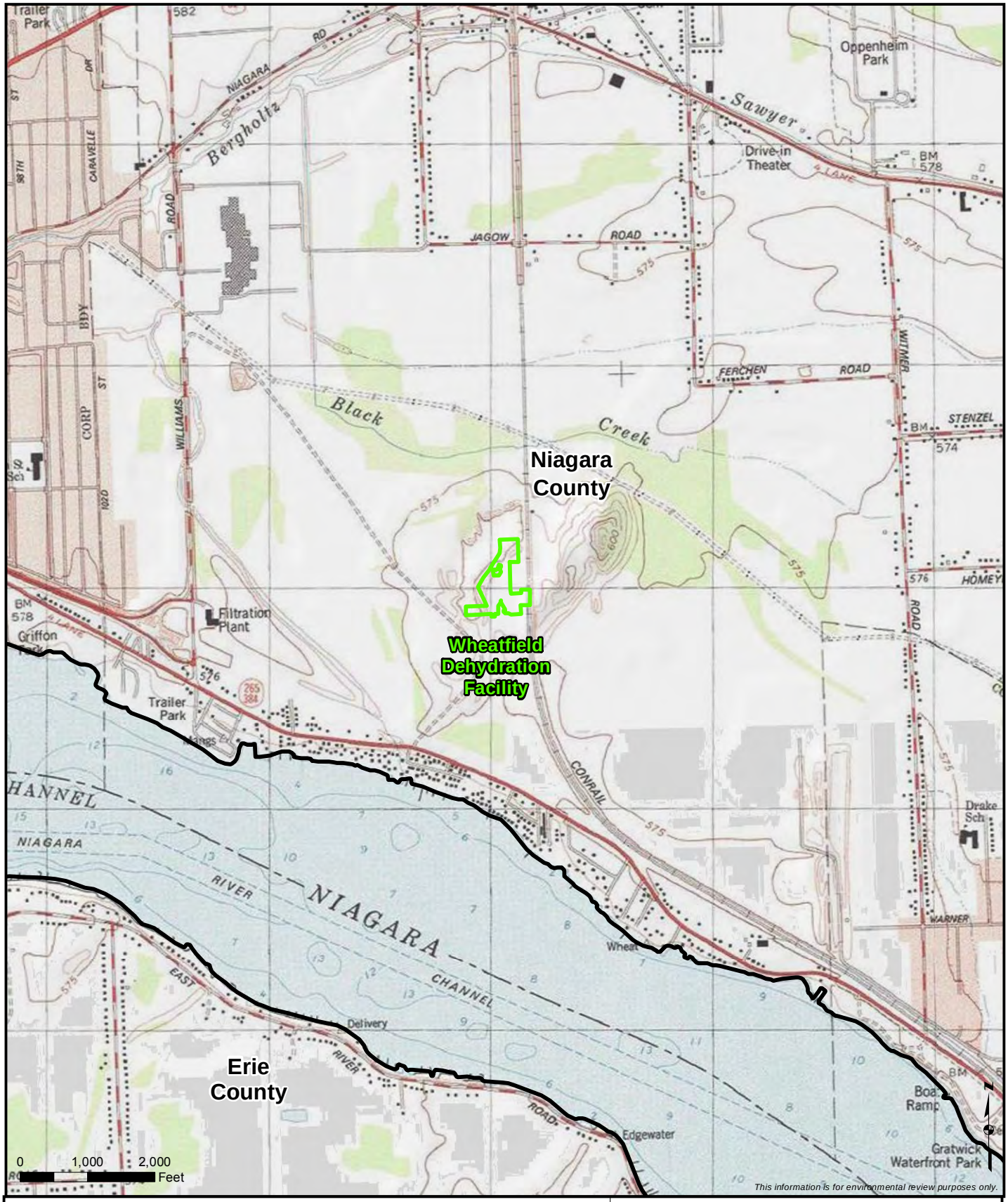

Aboveground Facilities

Sheet 32 of 32

Appendix A

Northern Access 2016 Project

Allegany, Cattaraugus, Erie, and Niagara Counties, New York

20160727-4003 FERC PDF (Unofficial) 07/27/2016

APPENDIX B

MP LOCATION, EXISTING LAND USE, AND APPROXIMATE LENGTH AND WIDTH OF THE PROJECT ACCESS ROADS

APPENDIX B

Access Roads

Access Road	Nearest Milepost	Location (County, State)	Proposed Use	Length (ft/mi)[a]	Current Width (ft)	Current Land Use[b]
Mainline Pipeline						
AR-1A	0.0	McKean, PA	Temp	240/0.05	NA[c]	Industrial/ Commercial, Roadway
AR-1	0.2	McKean, PA	Temp	3,723 /0.71	16	Roadway
AR-1C	0.2	McKean, PA	Temp	1,059/0.2	8	Roadway
AR-1B	0.3	McKean, PA	Temp	699/0.13	8	Roadway
AR-2	0.4	McKean, PA	Temp	4,138/0.78	16	Roadway
AR-3	1.1	McKean, PA	Temp	3,604/0.68	12-14	Roadway
AR-4	2.2-2.6	McKean, PA	Temp	10,638/2.01	12-20	Roadway
AR-5	2.6	McKean, PA	Temp	4,334/0.82	12-16	Roadway
AR-6	3.3	McKean, PA	Temp	3,830/0.73	8	Roadway
AR-7	3.3	McKean, PA	Temp	765/0.14	8	Roadway
AR-8	3.4	McKean, PA	Temp	5,177/0.98	12-16	Roadway
AR-9	4.4	McKean, PA	Temp	4,102/0.78	16+	Roadway
AR-10	4.4	McKean, PA	Temp	2,589/0.49	16+	Roadway
AR-11	5.4	McKean, PA	Temp	529/0.10	16	Roadway
MLV Site 1 Permanent AR	6.9	McKean, PA	Perm	56/0.01	NA[c]	Industrial/ Commercial
AR-12A	7.8	McKean, PA	Temp	11,617/2.2	20	Roadway
AR-12B	10.9	McKean, PA	Temp	4,199/0.80	12-14	Roadway
AR-13	11.8	McKean, PA	Temp	72/0.01	12	Roadway
AR-14	13.1	McKean, PA	Temp	1,090/0.21	25	Roadway
MLV Site 2 Permanent AR	14.1	McKean, PA	Perm	56/0.01	NA[c]	Agricultural
AR-15	14.4	McKean, PA	Temp	2,262/0.43	20	Roadway
AR-16	15.3	McKean, PA	Temp	1,446/0.27	16	Roadway
AR-17	18.4	McKean, PA	Temp	418/0.08	12	Roadway
MLV Site 3 Permanent AR	21.9	McKean, PA	Perm	49/0.01	NA[c]	Agricultural
AR-18	22.2	McKean, PA	Temp	1,357/0.26	16-20	Roadway
AR-19	23.4	McKean, PA	Temp	1,178/0.22	12	Roadway
AR-20	24.0	McKean, PA	Temp	2,982/0.56	12-16	Roadway
AR-21	25.2	McKean, PA	Temp	1,771/0.34	16-20	Roadway
AR-23	26.6	McKean, PA	Temp	5,053/0.96	12	Roadway
AR-24A	27.5	McKean, PA	Temp	2,527/0.48	12	Roadway
AR-24B	28.1	Allegany, NY	Temp	1,459/0.28	12	Roadway
MLV Site 4 Permanent AR	28.1	Allegany, NY	Perm	1,459/0.28	NA[c]	Forest
AR-25	30.2	Allegany, NY	Temp	5,788/1.09	10-16	Roadway
AR-26	32.2	Allegany, NY	Temp	4,925/0.93	16-20	Roadway
MLV Site 5 Permanent AR	34.8	Allegany, NY	Perm	373/0.07	NA[c]	Agricultural/ Forest
AR-27B	35.6	Cattaraugus, NY	Temp	12,478/2.36	10-16	Roadway
AR-27AA	36.1	Cattaraugus, NY	Temp	1,186/0.22	12	Roadway
AR-27BB	36.5	Cattaraugus, NY	Temp	2,860/0.54	15	Roadway
AR-27BC	37.2	Cattaraugus, NY	Temp	691/0.13	NA[c]	Agricultural
AR-27C	37.8	Cattaraugus, NY	Temp	2,452/0.46	16	Roadway
MLV Site 6 Permanent AR	43.4	Cattaraugus, NY	Perm	541/0.10	NA[c]	Open
AR-28	43.5	Cattaraugus, NY	Temp	1,865/0.35	12	Roadway
MLV Site 7 Permanent AR	51.4	Cattaraugus, NY	Perm	28/0.005	NA[b]	Open
AR-29	52.2	Cattaraugus, NY	Temp	2,851/0.54	15	Roadway
AR-31	53.7	Cattaraugus, NY	Temp	2,326/0.44	18	Roadway
AR-32	54.4	Cattaraugus, NY	Temp	1,228/0.23	14	Roadway

APPENDIX B

Access Roads

Access Road	Nearest Milepost	Location (County, State)	Proposed Use	Length (ft/mi)[a]	Current Width (ft)	Current Land Use[b]
AR-34	58.0	Cattaraugus, NY	Temp	1,226/0.23	15	Roadway
MLV Site 8 Permanent AR	58.4	Cattaraugus, NY	Perm	267/0.05	NA[c]	Open
AR-35	61.9	Cattaraugus, NY	Temp	1,887/0.36	12	Roadway
MLV Site 9 Permanent AR	65.1	Cattaraugus, NY	Perm	49/0.01	12	Roadway
AR-36	65.6	Cattaraugus, NY	Temp	2,615/0.50	15	Roadway
AR-37A	67.4	Cattaraugus, NY	Temp	3,924/0.78	24	Roadway
AR-38	68.2	Cattaraugus, NY	Temp	928/0.18	12	Roadway
AR-39	69.4	Cattaraugus, NY	Temp	1,517/0.29	12	Roadway
MLV Site 10 Permanent AR	73.0	Erie, NY	Perm	57/0.01	14	Roadway
AR-42	75.5	Erie, NY	Temp	2,393/0.45	10	Roadway
MLV Site 11 Permanent AR	80.8	Erie, NY	Perm	179/0.03	NA[c]	Agricultural
MLV Site 12 Permanent AR	87.8	Erie, NY	Perm	343/0.06	NA[c]	Open
AR-46	88.7	Erie, NY	Temp	247/0.04	8-10	Roadway
AR-47 (at TGP Interconnect)	92.4	Erie, NY	Temp	3,759/0.71	15	Roadway
AR-47A	96.8	Erie, NY	Temp	1,397/0.26	15	Roadway
EMP-03 Pipeline						
AR-1	0.0	Niagara, NY	Temp	1,689/0.32	NA[c]	Agricultural
XM-10 to Empire Tie- in AR	2.1	Niagara, NY	Temp	5,280/1.0	30	Roadway
Wheatfield Dehydration Facility AR	NA	Niagara, NY	Temp	5,552/1.05	30	Roadway

Notes:
[a] Access road lengths based on estimates by Tetra Tech, Inc. 2016.
[b] Land uses surrounding access road.
[c] Access road is not currently used for existing roadway or trail.
Perm = permanent, Temp = temporary, NA = not applicable

20160727-4003 FERC PDF (Unofficial) 07/27/2016

APPENDIX C

TYPICAL RIGHT-OF-WAY CONFIGURATIONS PROPOSED BY NATIONAL FUEL

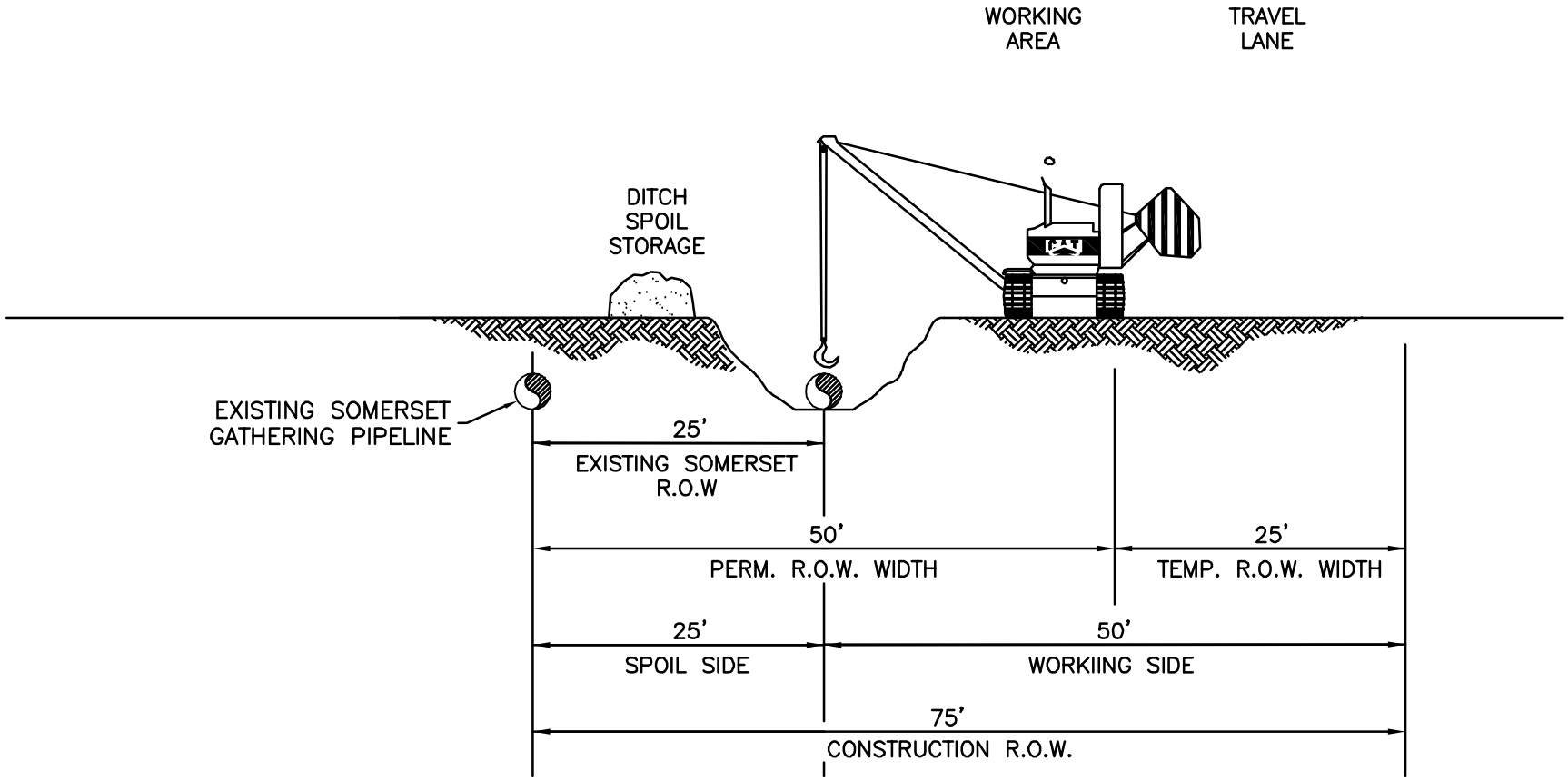

C-1

File No.:	NORTHERN ACCESS 2016 MAINLINE CONSTRUCTION PARALLEL TO SOMERSET GATHERING MILE POST 3.5 TO 5.7		
	DRAWN BY	DATE 3-13-15	DWG. NO.
	CHECKED BY	SCALE NOTED	
	APPROVED BY	SHEET	

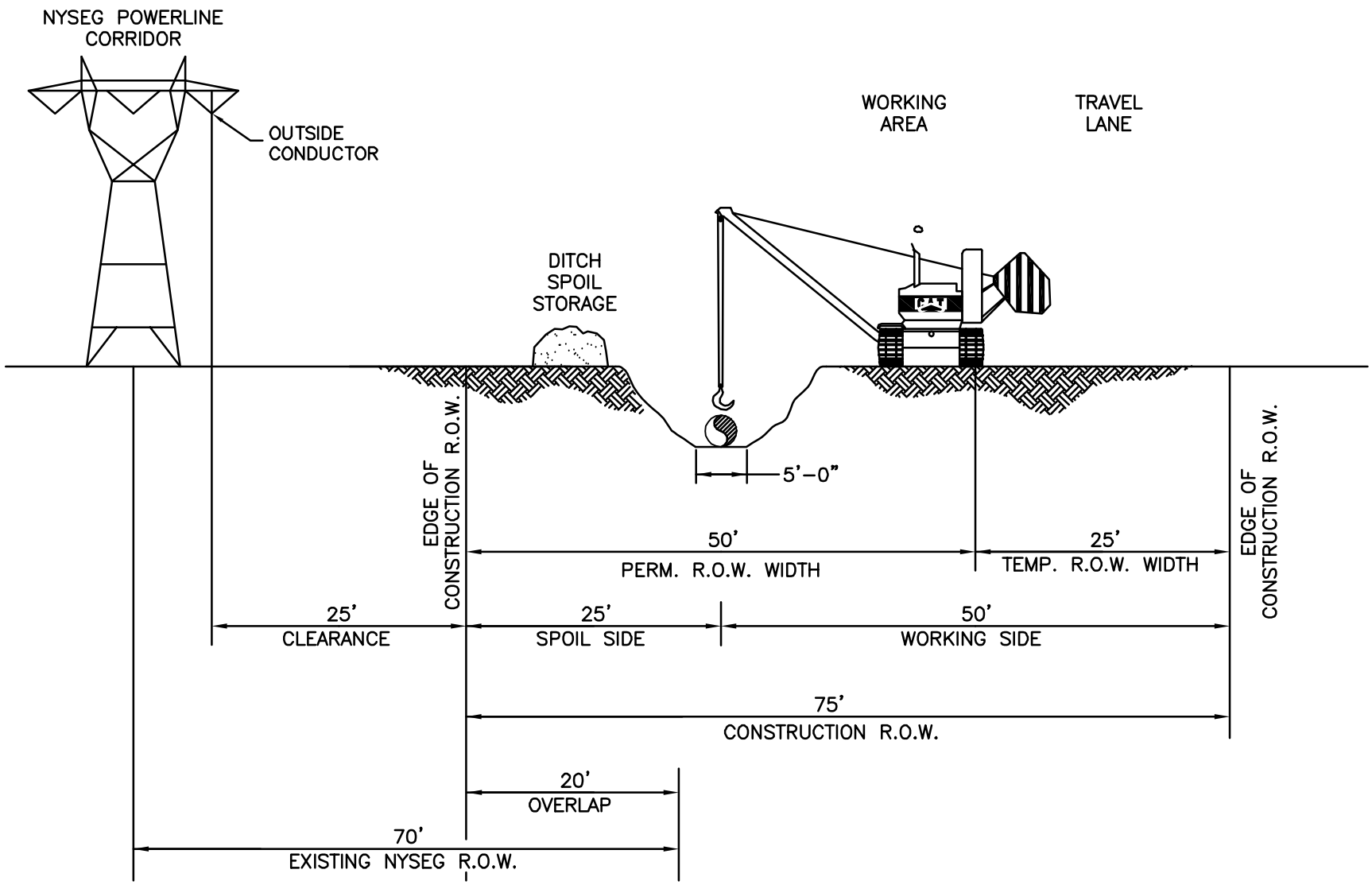

File No.:

NORTHERN ACCESS 2016
MAINLINE CONSTRUCTION PARALLEL TO NYSEG
MILE POST 7.9 TO 12.9

DRAWN BY	DATE 3-13-15	DWG. NO.
CHECKED BY	SCALE NOTED	
APPROVED BY	SHEET	

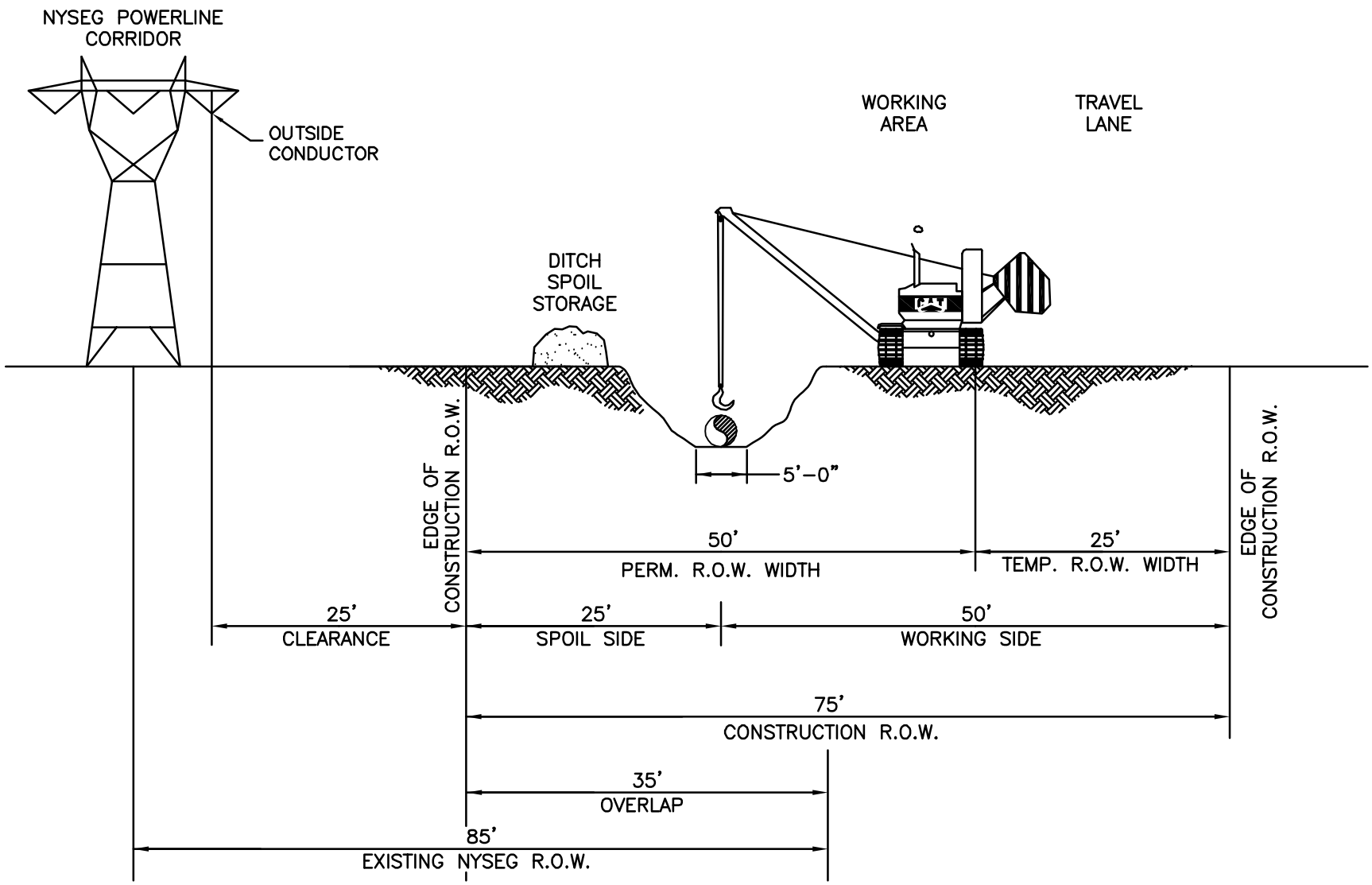

File No.:	NORTHERN ACCESS 2016 MAINLINE CONSTRUCTION PARALLEL TO NYSEG MILE POST 14.3 TO 32.9		
	DRAWN BY	DATE 3-13-15	DWG. NO.
	CHECKED BY	SCALE NOTED	
	APPROVED BY	SHEET	

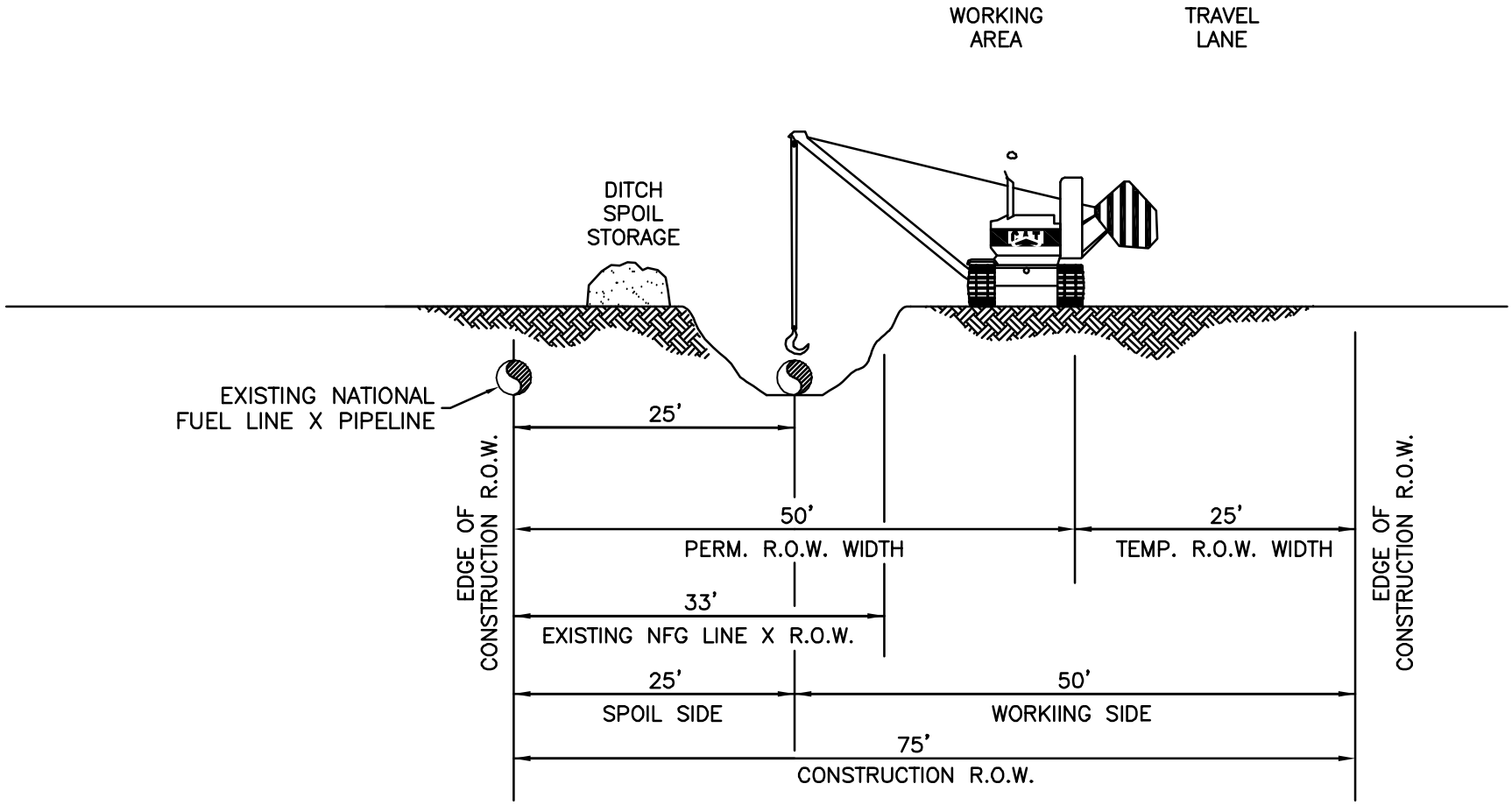

File No.:

NORTHERN ACCESS 2016

MAINLINE CONSTRUCTION PARALLEL TO NATIONAL FUEL LINE X

MILE POST 34.2 TO 51.8

DRAWN BY	DATE 3-13-15	DWG. NO.
CHECKED BY	SCALE NOTED	
APPROVED BY	SHEET	

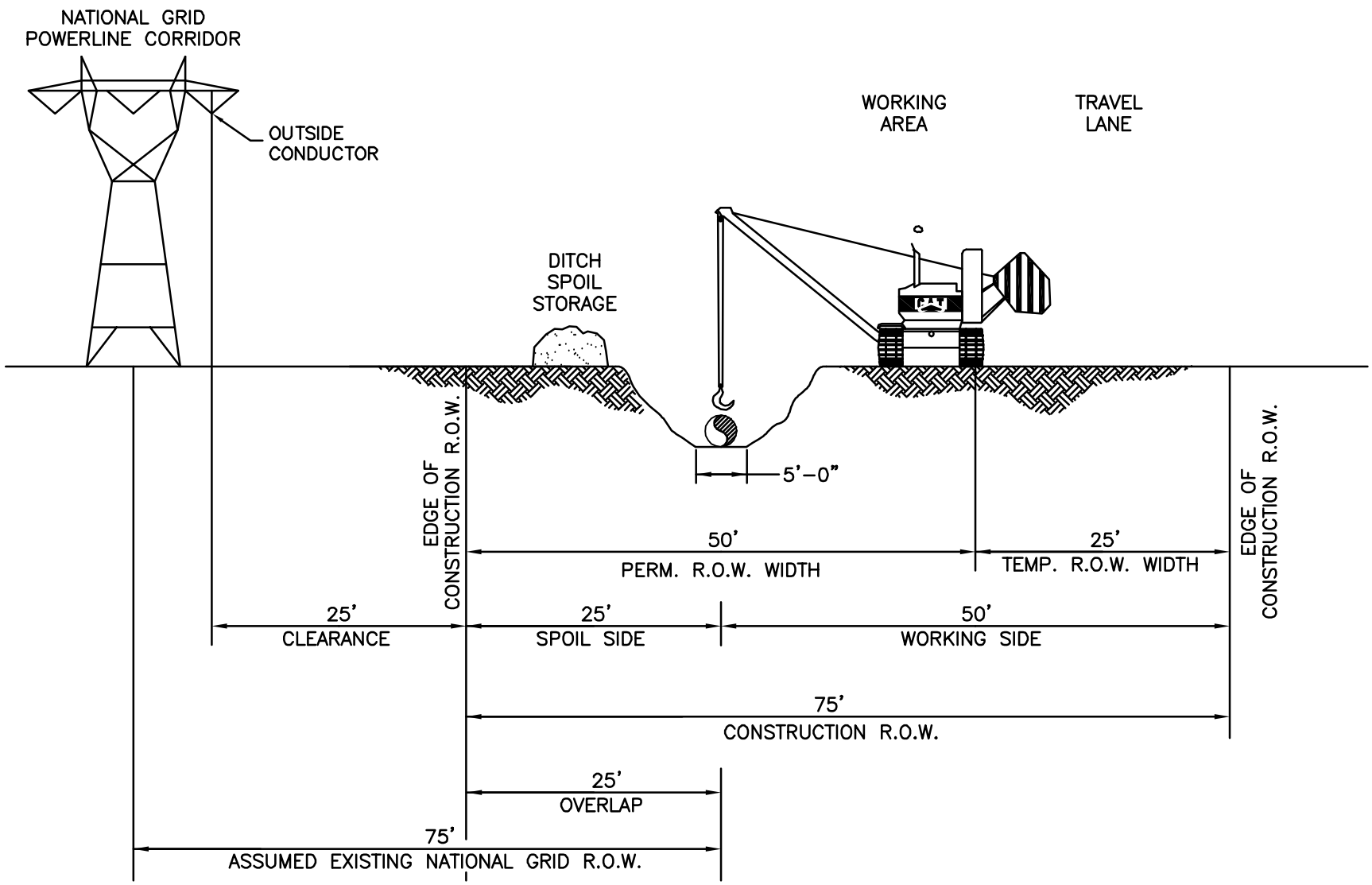

File No.:	NORTHERN ACCESS 2016 MAINLINE CONSTRUCTION PARALLEL TO NATIONAL GRID MILE POST 51.8 TO 71.6		
	DRAWN BY	DATE 3-13-15	DWG. NO.
	CHECKED BY	SCALE NOTED	
	APPROVED BY	SHEET	

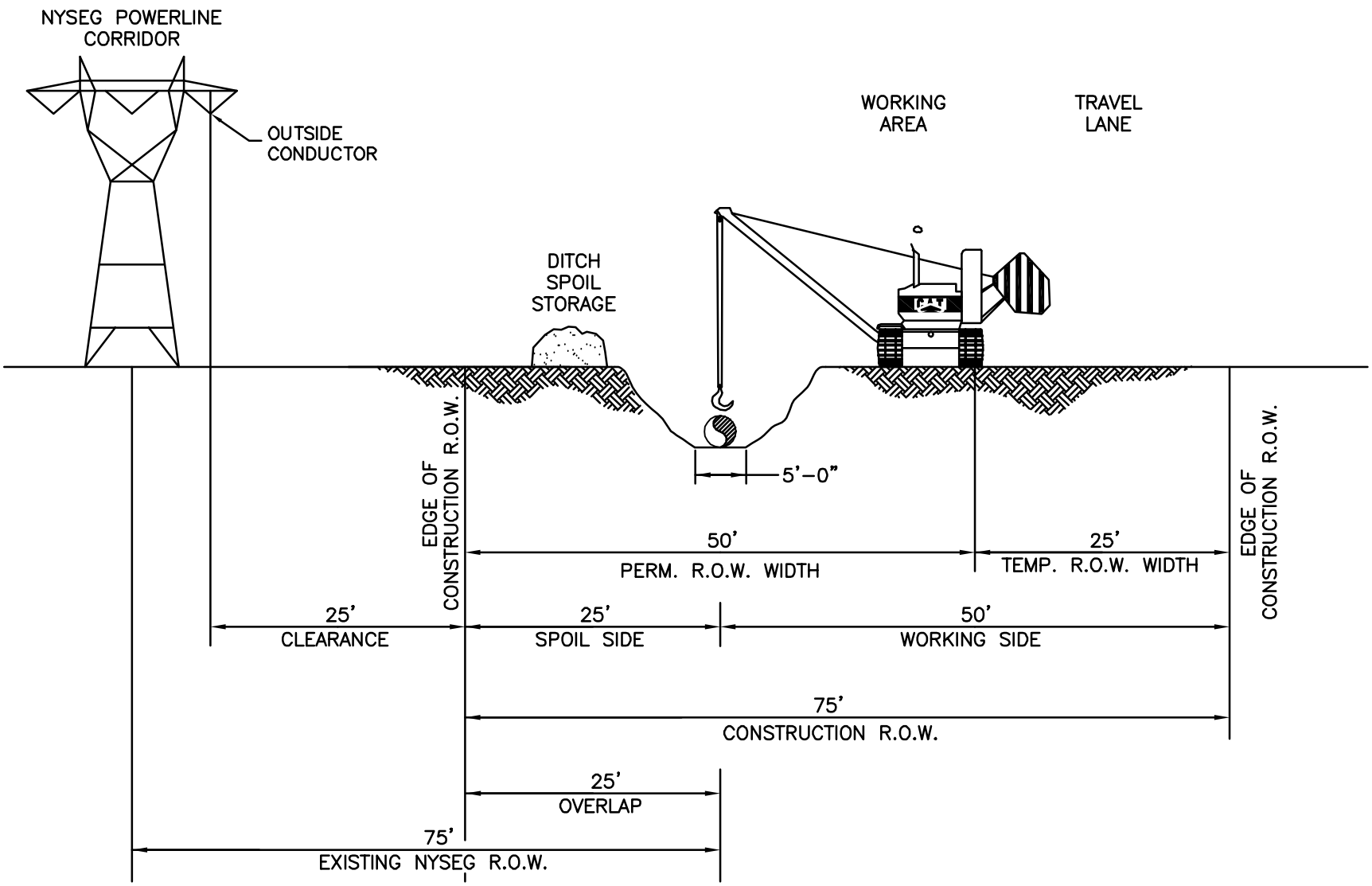

File No.:	NORTHERN ACCESS 2016 MAINLINE CONSTRUCTION PARALLEL TO NYSEG MILE POST 71.6 TO 92.8		
	DRAWN BY	DATE 3-13-15	DWG. NO.
	CHECKED BY	SCALE NOTED	
	APPROVED BY	SHEET	

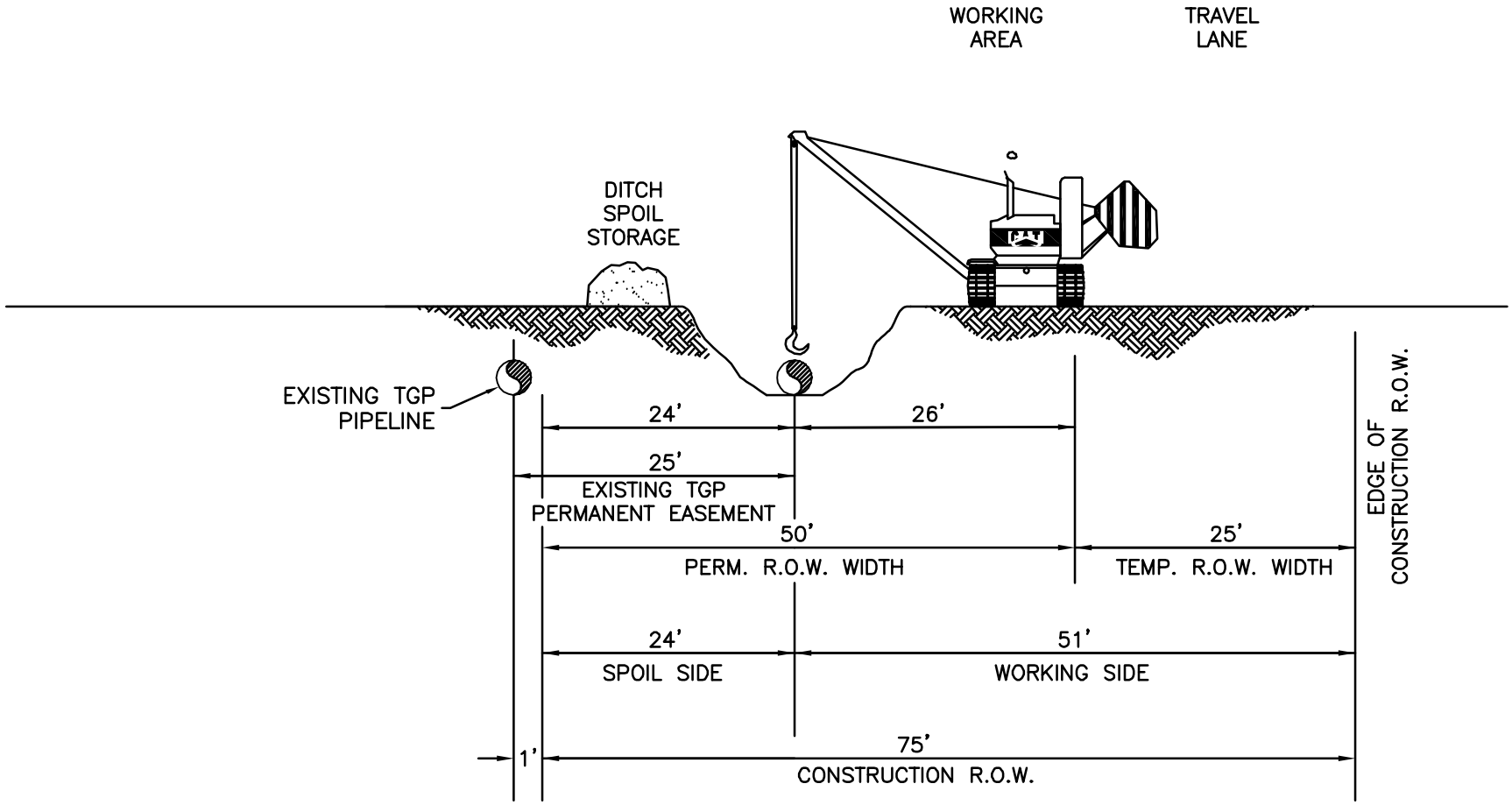

C-7

File No.:	NORTHERN ACCESS 2016 MAINLINE CONSTRUCTION PARALLEL TO TENNESSE GAS PIPELINE MILE POST 92.8 TO 95.7		
	DRAWN BY	DATE 3-13-15	DWG. NO.
	CHECKED BY	SCALE NOTED	
	APPROVED BY	SHEET	

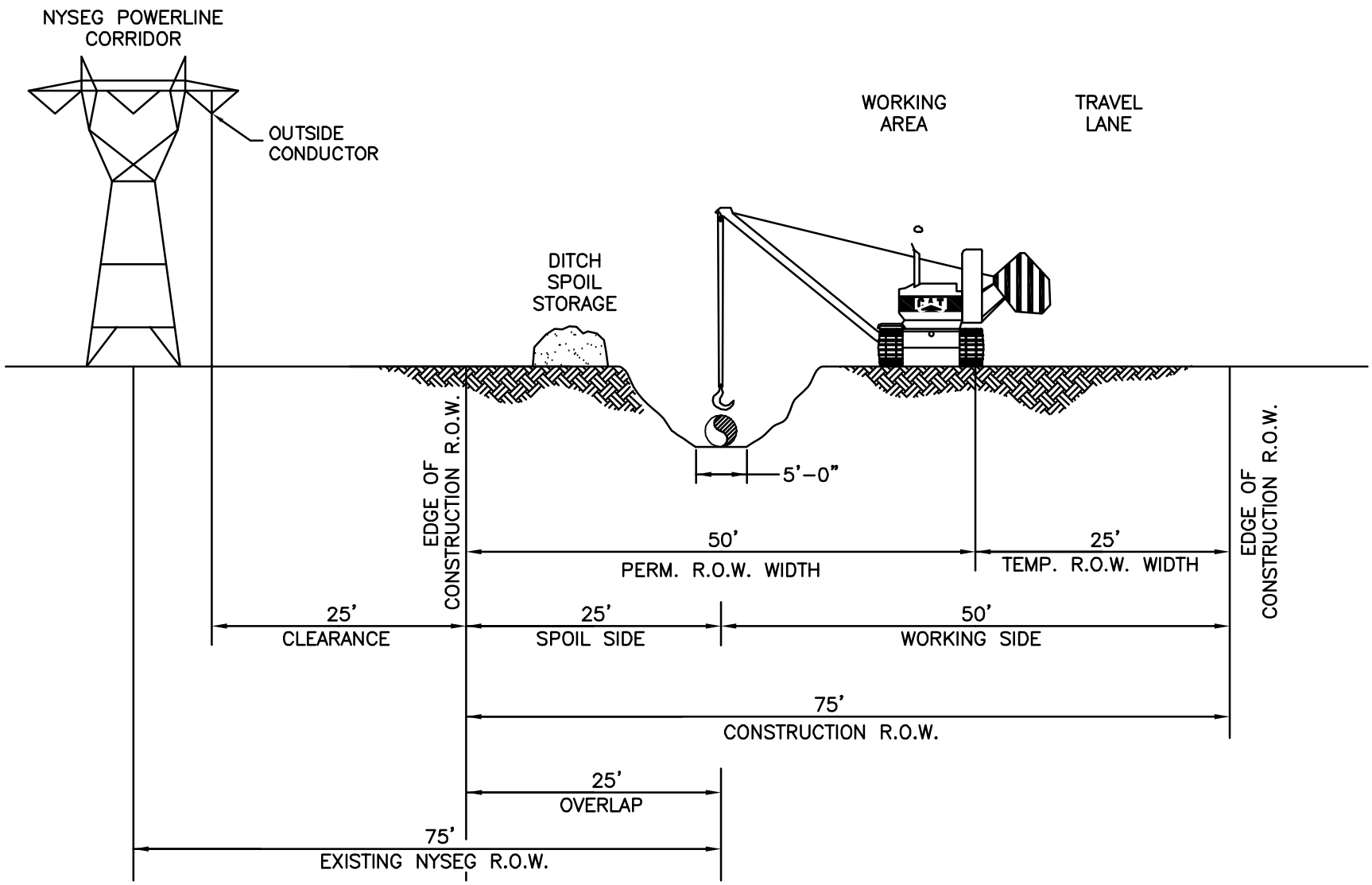

File No.:	NORTHERN ACCESS 2016 MAINLINE CONSTRUCTION PARALLEL TO NYSEG MILE POST 96.5 TO 96.7		
	DRAWN BY	DATE 3-13-15	DWG. NO.
	CHECKED BY	SCALE NOTED	
	APPROVED BY	SHEET	

20160727-4003 FERC PDF (Unofficial) 07/27/2016

APPENDIX D

EROSION AND SEDIMENT CONTROL & AGRICULTURAL MITIGATION PLAN

20160727-4003 FERC PDF (Unofficial) 07/27/2016

NATIONAL FUEL GAS CORPORATION

Erosion and Sediment Control

&

Agricultural Mitigation Plan

(ESCAMP)

18 November 2013

Revised : 26 August 2014

TABLE OF CONTENTS **Page**

1 INTRODUCTION **1**

1.1 Plan Objectives 1
1.2 Format 1

2 SUPERVISION AND INSPECTION **2**

2.1 Environmental Inspection 2
2.2 Responsibilities of Environmental Inspectors 2
2.3 Agricultural Inspection 4
2.4 Responsibilities/Qualifications of Agriculture Inspectors 4

3 PRECONSTRUCTION PLANNING **6**

3.1 Construction Work Areas 7
3.1.1 ROW & Staging Areas 7
3.1.2 Access Roads 7
3.1.3 Pipe yards 8
3.1.4 Wetland/Waterbody Crossings 8
3.2 Agricultural Area Planning 9
3.2.1 Drain Tile and Irrigation Systems 9
3.2.2 Grazing Deferment 9
3.3 Disposal Planning 9
3.4 Agency Coordination 9
3.5 Spill Prevention and Response Procedures 10
3.6 Stormwater Pollution Prevention Plan 10
3.7 Residential Construction 10
3.8 Winter Construction Plans 11

4 CONSTRUCTION ACTIVITIES **11**

4.1 Approved Areas of Disturbance 11
4.2 Residential Area Construction 12
4.3 Agricultural Area Construction 13
4.3.1 Topsoil Segregation 13
4.3.2 Drain Tiles 13
4.3.3 Irrigation 14
4.4 Equipment Crossings 14
4.5 Road Crossings and Access Points 14
4.6 Interim Stabilization 15
4.7 Slope Breakers 15
4.8 Sediment Barriers 16
4.9 Mulch 17
4.10 Trench Dewatering 17
4.11 Temporary Trench Breakers 19
4.13 Maintenance of Erosion Control Devices 19

5 WATERBODY CROSSINGS **20**

20160727-4003 FERC PDF (Unofficial) 07/27/2016

5.1 Construction Restrictions 20
5.2 Stream Buffer Area 20
5.3 Maintenance of Stream Crossing Control Devices 20
5.4 Additional Work Space Areas 20
5.5 Spoil Pile Placement/Control 21
5.6 Waterbody Crossing Procedures 21
5.7 Pipeline Construction at Streams 22
5.8 Equipment Bridges 22
5.9 Dry-Ditch Crossing Methods 23
5.9.1 Dam and Pump 23
5.9.2 Flume Crossing 23
5.9.3 Horizontal Directional Drill 23
5.10 HDD - Inadvertent Release Contingencies 24
5.11 Waterbody Size Classification 25
5.12 Crossing of Minor Waterbodies 25
5.13 Crossing of Intermediate Waterbodies 26
5.14 Crossing of Major Waterbodies 26
5.15 Temporary Erosion and Sediment Control 26
5.16 Trench Dewatering 27

6. WETLAND CROSSINGS 27

6.1 General Guidelines 27
6.1.1 Construction in Dry Wetlands 28
6.1.2 Construction in Saturated Wetlands 29
6.2 Standard Pipeline Construction 29
6.3 Extra Work Areas and Access Roads 30
6.4 Equipment Pads / Timber Mats 31
6.5 Clearing 31
6.6 Grading 32
6.7 Trenching 32
6.8 Temporary Sediment Control 32
6.9 Trench Dewatering 33
6.10 Backfilling 33

7 RESTORATION 33

7.1 Cleanup 33
7.2 Permanent Trench Breakers 34
7.3 Permanent Slope Breakers 35
7.4 Soil Compaction Mitigation 35
7.5 Permanent Restoration Measures 35
7.6 Wetland and Waterbody Crossing Restoration 37
7.6.1 Wetlands Crossings 37
7.6.2 Waterbody Crossings 38
7.7 Residential Areas Restoration 39
7.8 Agricultural Mitigation 39
7.8.1 Subsurface Drainage Systems 40

8 REVEGETATION 41

8.1 General 41

20160727-4003 FERC PDF (Unofficial) 07/27/2016

8.2 Revegetation Operations 41
8.3 Soil Additives 41
8.4 Seeding Requirements 42
8.5 Temporary Mixtures - October 15 through March 31 43
8.6 Permanent Mixtures - April 1 through October 14 43

9 POST CONSTRUCTION ACTIVITIES AND REPORTING 43

9.1 Monitoring and Maintenance 43
9.1.1 Waterbody Post-Construction Maintenance 44
9.1.2 Wetland Post-Construction Maintenance 44
9.2 Reporting 45
9.2.1 Wetland Reporting 45
9.3 Off Road Vehicle Control 46

10 GENERAL PIPELINE CONSTRUCTION SEQUENCING 46

10.1 Pre-Construction 46
10.2 Staging Area 46
10.3 Handling of Hazardous Materials 47
10.4 Access Roads 47
10.5 Clearing 47
10.6 Grading 48
10.7 Rock Entrances 48
10.8 Temporary Diversions 48
10.9 Ditching 48
10.10 Lowering In 49
10.11 Backfilling 49
10.12 Hydrostatic Testing 50
10.12.1 Notification Procedures and Permits 50
10.12.2 General 50
10.12.3 Intake source and Rate 51
10.12.4 Discharge Location, Method, and Rate 51
10.13 Restoration and Revegetation 51

11 REFERENCES 52

Attachment 1 – Soil Protection and Subsoil Decompaction Plan
Attachment 2 – Best Management Practices Drawings
Attachment 3 – Special Crop Productivity Monitoring Procedures
Attachment 4 – Seeding, Fertilizing, and Lime Recommendations for Gas Pipeline Right-of-Way Restoration in Farmlands
Attachment 5 - NFG General Seed Mixtures
Attachment 6 - Winter Construction Plan

20160727-4003 FERC PDF (Unofficial) 07/27/2016

1 INTRODUCTION

1.1 Plan Objectives

The primary objective of this Erosion and Sedimentation Control & Agricultural Mitigation Plan (ESCAMP or "Plan") is to reduce potential impacts from construction and maintenance of the project and outline mitigation, monitoring and maintenance procedures.

This Plan describes basic environmental construction and agricultural mitigation techniques that National (or its contractors) will use to construct and maintain pipelines. Best Management Practices (BMPs) will be implemented throughout construction to protect the environment and to minimize potential effects to the pipeline project. This document references BMPs that may be National Fuel Gas's (National) BMPs, Pennsylvania Department of Environmental Protection's (PADEP) BMPs, New York State Department of Environmental Conservation (NYSDEC) BMPs or varying combinations of listed references.

This ESCAMP has been modified and may be subject to further revision, as needed prior to construction, to include any additional requirements recommended by Federal, State, or Local agencies during the process of issuing permits. This document will be included as part of the Contractor's construction specifications.

1.2 Format

The content of this Plan is derived from the Federal Energy Regulatory Commission's (FERC) Wetland and Waterbody Construction and Mitigation Procedure; Upland Erosion Control, Revegetation, and Maintenance Plan; and Agricultural Mitigation Through the Stages of Pipeline Planning, Construction/Restoration and Follow Up Monitoring. Additional project specific input has been integrated from consultation with the United State Army Corps of Engineering, the Pennsylvania Department of Environmental Protection, the New York State Department of Environmental Conservation, the United States Fish & Wildlife Service, the United States Department of Agriculture, New York State Department of Agriculture & Markets, and the County Soil & Water Conservation Districts.

This ESCAMP provides information regarding the project construction and restoration, including the following:

- Agricultural Mitigation, as described herein and provided in the attached Soil Protection and Subsoil Decompaction Plan (Attachment 1);
- Wetland/Waterbody Construction, Erosion and Sedimentation Controls as described herein and as detailed in attached Best Management Practices (BMP) drawings (Attachment 2);
- Stormwater Pollution Prevention project information; and
- Revegetation and Maintenance details.
- Reference information used to develop this Plan is identified in the Section 11. Supplemental information is provided in the project Spill Prevention and Response Procedures (SPRP) document, Hydrostatic Test Plan, and Site Specific Residential Mitigation Plans (not included in this document).

20160727-4003 FERC PDF (Unofficial) 07/27/2016

2 SUPERVISION AND INSPECTION

2.1 Environmental Inspection

- At least one Environmental Inspector having knowledge of the wetland and waterbody conditions in the project area is required for each construction spread during construction and restoration. The number and experience of Environmental Inspectors assigned to each construction spread should be appropriate for the length of the construction spread and the number/significance of resources affected.
- Environmental Inspectors shall have peer status with all other activity inspectors.
- Environmental Inspectors shall have the authority to stop activities that violate the environmental conditions of the FERC's Orders , stipulations of other environmental permits or approvals, or landowner easment agreements; and to order appropriate corrective action. Corrective actions (and their status) will be documented in daily forms and, at a minimum, maintained in project files for the duration of construction activities.

The Project's Environmental Manager will be the primary liaison between the Project and agency representatives. Environmental Inspectors may be directed by the Environmental Manager to coordinate with agency field staff during project inspection activities. Agencies will be notified of project activities in accordance with permit and FERC's Orders requirements or as required by law (e.g., spill of hazardous material to a water source). Additional notifications will be made on a case-by-case situation (e.g., requests for agency guidance or existing requirement variances).

2.2 Responsibilities of Environmental Inspectors

At a minimum, the Environmental Inspector(s) shall be responsible for:

- Inspecting construction activities for compliance with the requirements of this Plan, FERC Procedures, the environmental conditions of the FERC's orders, the mitigation measures proposed by the project sponsor (as approved and/or modified by the order), other environmental permits and approvals, and environmental requirements in landowner easement agreements.
- Identifying, documenting, and overseeing corrective actions, as necessary to bring an activity back into compliance.
- Verifying that the limits of authorized construction work areas and locations of access roads are visibly marked before clearing, and maintained throughout construction.
- Verifying the location of signs and highly visible flagging marking the boundaries of sensitive resource areas, waterbodies, wetlands, or areas with special requirements along the construction work area.
- Identifying erosion/sediment control and soil stabilization needs in all areas.
- Coordinate activities with agricultural inspectors and drainage specialists in farmland areas (see Section 2.4 – Responsibilities/Qualifications of Agriculture Inspectors).

20160727-4003 FERC PDF (Unofficial) 07/27/2016

- Ensuring that the design of slope breakers will not cause erosion or direct water into sensitive environmental resource areas including known cultural resources sites, wetlands, waterbodies and sensitive species habitats.
- Verifying that dewatering activities are properly monitored and do not result in the deposition of sand, silt, and/or sediment into sensitive environmental resource areas, including wetlands, waterbodies, cultural resource sites, and sensitive species habitats; stopping dewatering activities if such deposition is occurring and ensuring the design of the discharge shall be changed to prevent reoccurrence; and verifying that dewatering structures are removed after completion of dewatering activities. (See Trench Dewatering section of this Plan).
- Ensuring that subsoil and topsoil are tested in residential areas to measure compaction and determine the need for corrective action.
- Advising the Chief Inspector when environmental conditions (such as wet weather or frozen soils) make it advisable to restrict or delay construction activities to avoid topsoil mixing or excessive compaction. .
- Ensuring restoration of contours and topsoil.
- Verifying that the soils imported for agricultural or residential use have been certified (if available) as free of noxious weeds and soil pests, unless otherwise approved by the landowner.
- Ensuring that erosion control devices are properly installed, to prevent sediment flow into sensitive environmental resource areas (e.g., wetlands, waterbodies, cultural resource sites, and sensitive species habitats) beyond approved workspace limits and onto roads, and determining the need for additional erosion control devices.
- When working in New York State, ensuring compliance with New York State DEC State Pollution Discharge Elimination System (SPDES) General Permit for Stormwater Discharges from construction activities (See Stormwater Pollution Prevention section of this Plan).
- When working in Pennsylvania, ensuring compliance with Pennsylvania DEP General NPDES Permit for Stormwater Discharges Associated with Construction Activities (See Stormwater Pollution Prevention section of this plan).
- Inspecting and ensuring the maintenance of temporary erosion control measures at least:
    - On a daily basis in areas of active construction or equipment operation.
    - On a weekly basis in areas with no construction or equipment operation.
    - Within 24 hours of 0.5 inch of rainfall.
- Ensuring the repair of all ineffective temporary erosion control measures within 24 hours of identification, or as soon as conditions allow if compliance with this time frame would result in greater environmental impacts.
- Keeping records of compliance with the environmental conditions of the FERC's orders, and the mitigation measures proposed by the project sponsor in the application submitted to the FERC, and other Federal or state environmental permits during active construction and restoration.
- Identifying areas that should be given special attention to ensure stabilization and restoration after the construction phase.

20160727-4003 FERC PDF (Unofficial) 07/27/2016

- Verifying that locations for any disposal of excess construction materials for beneficial reuse comply with section 3.3.

2.3 Agricultural Inspection

The Agricultural Inspection for the project will include a combination of agricultural and drainage specialists to ensure aspects of the project that affect farmland meet or exceed: the project-specific conditions or orders of certification, relevant to agricultural resources, which are incorporated by the lead/certifying agency.

National's level of agriculture-related staffing will be dependent on the workload requirements including but not limited to: technical, pre-construction planning; construction/restoration inspection and; monitoring and follow-up remediation including drainage mitigation activities (e.g.: less staff during the pre-construction planning phase and the monitoring and the follow-up remediation phase), but will include the project's commitment to agricultural inspectors and agricultural drainage specialists on a full-time basis through pipeline construction/restoration, which make up the peak work load phase of pipeline right-of-way activity.

Based on the project's anticipated number of construction work spreads, there may be one agricultural drainage specialist and two agricultural inspectors assigned full-time, per spread. However, a practical degree of flexibility will be available: should agricultural construction/restoration activity within one work spread be temporarily light enough for the agricultural inspector to fully and effectively supervise, at a time when the activities are heavy in the other work spread, then the agricultural inspector in the former spread may temporarily assist the staff in the latter spread. For periods of peak construction/restoration activities in agricultural lands that exceed the effective capability of the full-time staff, the project will provide additional temporary agricultural inspectors.

During phases of less intensive project activity (e.g., pre-construction planning, or dormant right-of-way winterization without construction, follow-up crop monitoring, etc.), fewer staff may be employed, as appropriate, relative to the level of activity. Regardless, the project sponsor will provide an adequate number of qualified personnel (per the responsibilities/qualifications herein) to meet the level of effort required by this plan or conditions of FERC's Orders.

To the extent practicably feasible, the project will strive to utilize the same agricultural and drainage specialist staff during the planning, construction restoration and monitoring phases of work to allow for maximum technical continuity.

2.4 Responsibilities/Qualifications of Agriculture Inspectors

<u>Agricultural Inspector</u>

The work of a qualified Agricultural Inspector, with the ability and the authority required to perform independently, assumes the pipeline right-of-way project aspects listed below:

- Training and education of other project sponsor staff (e.g.: land agents, craft inspectors, assistant agricultural compliance inspectors, environmental inspectors, etc.), and construction personnel, in the proper use and application of the agricultural right-of-way standards and case-specific orders of certification.

20160727-4003 FERC PDF (Unofficial) 07/27/2016

- Technical field supervision over all aspects of the project that affects agricultural resources, through each stage of on-site work: right-of-way clearing, construction stages (including compliance with trench dewatering procedures), clean-up stage and initial restoration stages.
- Technical field supervision (after the satisfactory completion of initial restoration), over the on-site monitoring of, and the follow-up restoration in, agricultural lands.
- Communication in conjunction with other project staff with affected farmland owners and operators over the project's duration: planning through construction/initial restoration, to completion of monitoring and follow-up restoration.

The key mission of each Agricultural Inspector is ensuring the project's full compliance in meeting (or exceeding) standards and case-specific conditions or orders pertaining to the affected agricultural resources.

The following are recommended qualifications for Agricultural Inspectors:

- Earned a bachelor degree or associate in applied science diploma in: agronomy or environmental sciences, with concentration in: agriculture, soils, horticulture, forestry, or closely allied science, and been employed in the respective field, regionally, not less than five years (i.e.: not directly out of college); or-
- Advanced steadily in a career through on-the-job training and performance, regionally, for a minimum of ten years as a soil and water conservation field technician with a practical working knowledge of soil conservation, farming, surveying, land excavation and drainage, or similar types of work: from the land review, field planning and design/layout phase through construction inspection and site completion; or-
- Advanced steadily in a career through on-the-job training and field performance for a minimum of five years in pipeline construction/restoration right-of-way work, with at least two full years serving as an assistant to either a qualified agricultural or environmental compliance inspector, and have earned, and currently hold certification as, either a Professional in Erosion and Sediment Control (CPESC) or Professional in Storm Water Quality (CPSWQ); or-
- Combination of the above qualifications.

Drainage Specialist

The Agricultural Drainage Specialist is responsible for the detailed, on-site data consolidation of all surface and subsurface drainage characteristics and facilities for affected farmlands; and planning and technically supervising all drainage-related mitigation, through the planning and construction, initial restoration, post-construction monitoring and follow up restoration stages. The drainage specialist provides the specialized technical direction that enables the project to fully restore all disturbed land and all facility components of surface and subsurface drainage on affected farmland; including the effective mitigation of new or exacerbated conditions of water boils or field saturation

The drainage specialist serves as a specialized arm of the Agricultural Inspectors working in close technical coordination with them over a project's full duration, as required. The drainage specialist will provide primary technical direction of on-site drainage mitigation and follow up for all affected agricultural lands. In addition the drainage specialist may provide both technical field direction and oversight of the subcontractors specializing in agricultural drainage.

20160727-4003 FERC PDF (Unofficial) 07/27/2016

The work of a qualified drainage specialist, with the ability and technical authority to work both jointly and independently, assumes the pipeline right-of-way project aspects listed below:

- On-site inventory of all surface and subsurface drainage-related characteristics of affected farmlands, in the pre-construction planning phase. This includes location referencing for drainage such as:
    - existing features of surface runoff such as small but defined swales, up to large and broad swales;
    - existing farm features of water control such as diversion terraces, field ditches, main outlet ditches;
    - subsurface drain line systems ranging from clay tile to modern perforated polyethylene tubing; or, approximated locations of earlier stone drain systems;
    - key drainage features which are outside of the directly affected farm field[s], but may serve to receive the respective surface or subsurface drainage, e.g.: ditches and culverts of active or abandoned railroads, road ditches, etc.
- Estimating portions of farms, based on soil, terrain, and drainage/water table characteristics, where new or exacerbated conditions of water boils or field saturation should be anticipated for follow up mitigation.
- In farm lands, assisting other Agricultural and Environmental Inspectors in the advance selection of acceptable trench de- watering measures and respective locations of water discharge to avoid agricultural impacts and estimating the pumping/associated hose length requirements necessary to ensure such avoidance of impacts.
- Ensuring the project's prompt marking/staking of all disturbed drainage facilities. Assisting the Agricultural Inspectors, as needed, in ensuring compliance with trench de-watering standards and dry backfilling (as defined in Section 4.10) of the trenches in affected farmland.
- Planning and laying out interceptor drain line systems including their safe, gravity-flow discharge to predetermined outlet locations.
- Providing on-site design, general material estimates and technical field supervision over:
    - drain line repairs and system replacements;
    - the effective engineering re-construction of un-avoided surface drainage facilities such as diversion terraces or farm waterways;
    - the installation and outlet of interceptor drain line systems.

3 PRECONSTRUCTION PLANNING

This Section presents the pre-construction planning efforts, further details regarding the construction activities are presented in Section 4 – Construction Activities and general sequencing of planning, installation, cleanup and restoration is presented in Section 10 – General Pipeline Construction Sequencing.

20160727-4003 FERC PDF (Unofficial) 07/27/2016

3.1 Construction Work Areas

Construction activities shall be confined to the approved work areas.

- Identify all construction work areas (e.g., construction right-of-way, extra work space areas, pipe storage and contractor yards, borrow and disposal areas, access roads, etc.) that would be needed for safe construction. The project sponsor must ensure that appropriate cultural resources and biological surveys are conducted, as determined necessary by the appropriate federal and state agencies.
- Project sponsors are encouraged to consider expanding any cultural resources and endangered species surveys in anticipation of the need for activities outside of authorized work areas.
- Plan construction sequencing to limit the amount and duration of open trench sections, as necessary, to prevent excessive erosion or sediment flow into sensitive environmental resource areas.

3.1.1 ROW & Staging Areas

Before construction begins, the right-of-way (ROW) will be surveyed and staked. Other utility lines will be located and marked to prevent accidental damage during pipeline construction.

Staging areas will be set up when the contractor starts work. Proper BMP controls will be erected prior to any sustained heavy traffic. If vehicles enter or exit the staging area onto a paved road, an entrance pad will be installed as per *BMP Drawing No. 1.*

3.1.2 Access Roads

The project will make use of the ROW for access along the pipeline. Where additional access is necessary for pick-up trucks and other vehicles, existing access roads may be used upon agreement with the landowner. Appropriate BMP controls will be installed and maintained on these roads, and they will be reclaimed to a condition at least equal to their pre-construction condition.

In agricultural lands topsoil will be stripped and segregated for expansion (widening or lengthening) or installation access roads (if necessary). National will work with landowners, and if requested by the landowner, access roads will remain in place for landowner use following construction. Alternatively, if access roads are restored to original use (e.g., tillable land) they will be fully restored using the same scope of agricultural mitigation and restoration measures that apply to pipeline construction right-of-way.

20160727-4003 FERC PDF (Unofficial) 07/27/2016

3.1.3 Pipe yards

During project planning efforts have been made to site pipe yards in previously disturbed non-agricultural areas. If agricultural lands are utilized for yards, the Contractor shall strip and segregate topsoil in agricultural lands used as pipe yards. However, if any such area is used as a pipeyard it will be fully restored using the same scope of agricultural mitigation and restoration measures that apply to pipeline construction right-of-way.

3.1.4 Wetland/Waterbody Crossings

The pre-construction activities include survey of topographic surface elevations, in addition to the identification of wetlands and waterbodies. This survey will include elevations at the top and bottom of banks, location of the greatest stream depth, and edge water edge of the crossing for both pre- and post-construction. This topographic survey of conditions will be used, in conjunction with pre-construction photograph of the crossing locations from downstream and parallel to the pipeline centerline to document the pre-existing conditions of the crossing and to confirm that existing topography and profiles are re-established during restoration. All construction plans will be prepared in accordance with the FERC guidance, National standards, and the BMPs.

Stream crossings will be inspected daily during active construction and weekly during inactive construction. Following the restoration of the stream crossing, the crossings will be inspected after major rain events. This inspection program will continue through several high water events to ensure that the stream channel is stable.

The following should be filed with the Secretary of the FERC (Secretary) prior to the beginning of construction, for the review and written approval by the Director:

- Site-specific justifications for extra workspace areas that would be closer than 50 feet from a waterbody or wetland
- Site-specific justifications for the use of a construction right-of-way greater than 75- feet-wide in wetlands.

The following information must be filed with the Secretary prior to the beginning of construction. These filing requirements do not apply to projects constructed under the automatic authorization previsions in the FERC's regulations:

- Spill Prevention and Response Procedures specified in section 3.5
- A schedule identifying when trenching or blasting will occur within each waterbody greater than 10 feet wide, within any designated coldwater fishery, and within any waterbody identified as habitat for federally-listed threatened or endangered species. The project sponsor will revise the schedule as necessary to provide FERC staff at least 14 days advanced notice. Changes within this last 14-day period must provide for at least 48 hours advanced notice.
- Plans for horizontal directional drilling (HDD) under wetlands or waterbodies
- A wetland delineation report if applicable
- The hydrostatic testing information

3.2 Agricultural Area Planning

3.2.1 Drain Tile and Irrigation Systems

Supplementing the details of pre-construction activities, in agricultural areas, as identified in the responsibilities of the Drainage Specialist (Section 2.4), planning will include the following:

- Attempt to locate existing drain tiles and irrigation systems.
- Contact landowners and County Conservation Districts to determine the locations of future drain tiles that are likely to be installed within 3 years of the authorized construction.
- If working in New York State, develop procedures (with NYS DA&M) for constructing through drain tile areas, maintaining irrigation systems during construction, and repairing drain tiles and irrigation systems after construction.
- Engage qualified drain tile specialists, as needed to conduct or monitor repairs to drain tile systems affected by construction. Use drain tile specialists from the project area, if available.
- Assist in identification of the dewatering outlets and favorable locations, including off ROW, for the protected day lighting of gravity flow drain outlets for new interceptors or replaced drain lines.
- For new pipelines in areas where drain tiles exist or are planned, ensure that the depth of cover over the pipeline is sufficient to avoid interference with drain tile systems.

3.2.2 Grazing Deferment

Develop grazing deferment plans with willing landowners, grazing permittees, and land management agencies to minimize grazing disturbance of revegetation efforts.

3.3 Disposal Planning

Determine methods and locations for the regular collection, containment, and disposal of excess construction materials and debris (e.g., timber, slash, mats, garbage, drilling cuttings and fluids, excess rock, etc.) throughout the construction process. Disposal of materials for beneficial reuse must not result in adverse environmental impact and is subject to compliance with all applicable survey, landowner or land management agency approval, and permit requirements.

3.4 Agency Coordination

During the planning the project sponsor must coordinate with the appropriate local, state, and federal agencies as outlined in this Plan and /or required by the FERC's Orders.:

- Obtain written recommendations from the local soil conservation authorities or land management agencies regarding permanent erosion control and revegetation specifications.
- National will consult with the appropriate technical and/or regulatory agencies regarding invasive species, noxious weeds and soil-borne pathogens. National agrees to consult with the appropriate agencies

regarding agricultural bio security (noxious weeds and soil-borne pathogens). If necessary, based on this consultation, National will develop specific practical cost-effective procedures to mitigate significant agricultural bio security risks, if they are determined to exist in the project area.

- Develop specific procedures in coordination with the appropriate agencies to prevent the introduction or spread of invasive species, noxious weeds, and soil pests resulting from construction and restoration activities.
- Develop specific procedures in coordination with the appropriate agencies and landowners, as necessary, to allow for livestock and wildlife movement and protection during construction.
- Develop specific blasting procedures in coordination with the appropriate agencies that address pre- and post-blast inspections; advanced public notification; and mitigation measures for building foundations, groundwater wells, and springs. Use appropriate methods (e.g., blasting mats) to prevent damage to nearby structures and to prevent debris from entering sensitive environmental resource areas.

3.5 Spill Prevention and Response Procedures

The project sponsor shall develop project-specific Spill Prevention and Response Procedures, as specified in section IV of the staff's procedures. A copy must be files with the Secretary of the FERC (Secretary) prior to construction and made available in the field on each construction spread. The filing requirement does not apply to projects under the automatic authorization provisions in the FERC's regulations.

3.6 Stormwater Pollution Prevention Plan

Make available on each construction spread in Pennsylvania, the Stormwater Pollution Prevention Plan prepared for compliance with the National Pollution Discharge Elimination System (NPDES) General Permit for Stormwater Discharges from Construction Activities or the Pennsylvania Department of Environmental Protection's Erosion & Sedimentation Control General Permit (ESCGP-2).

Make available on each construction spread in New York, the Stormwater Pollution Prevention Plan prepared for compliance with the New York State Department of Environmental Conservation, State Pollution Discharge Elimination System (SPDES) General Permit for Stormwater Discharges from Construction Activities (GP-0-10-001).

3.7 Residential Construction

For all properties with residences located within 50 feet of construction work areas, project sponsors shall; avoid removal of mature trees and landscaping within the construction work area unless necessary for safe operation of construction equipment, or as specified on landowner agreements; fence the edge of the construction work area for a distance of 100 feet on either side of the residence; and restore all lawn areas and landscaping immediately following clean up operations, or as specified in landowner agreements. If season or weather conditions prevent compliance with these time frames, maintain and monitor temporary erosion controls (sediment barriers and mulch) until conditions allow completion of restoration.

20160727-4003 FERC PDF (Unofficial) 07/27/2016

3.8 Winter Construction Plans

If construction is planned to occur during winter weather conditions, project sponsors shall develop and file a project-specific winter construction plan with the FERC application. This filing requirement does not apply to projects constructed under the automatic authorization provisions of the FERC's regulations.

The plan shall address:

- Winter construction procedures (e.g., snow handling and removal, access road construction and maintenance, soil handling under saturated or frozen conditions, topsoil stripping).
- Stabilization and monitoring procedures if ground conditions will delay restoration until the following spring (e.g., mulching and erosion controls, inspecting and reporting, stormwater control during spring thaw conditions); and
- Final restoration procedures (e.g., subsidence and compaction repair, topsoil replacement, seeding).

4 CONSTRUCTION ACTIVITIES

This Section presents the details regarding specific construction activities while additional general sequencing of planning; installation, cleanup and restoration are presented in Section 10 – General Pipeline Construction Sequencing.

4.1 Approved Areas of Disturbance

Project-related ground disturbance shall be limited to the construction right-of-way, extra workspace areas, pipe storage yards, borrow and disposal areas, access roads, and other areas approved in the FERC's Orders. Any project-related ground disturbing activities outside these areas will require Director approval. This requirement does not apply to activities needed to comply with the Plan and Procedures (i.e., slope breakers, energy-dissipating devices, dewatering structures, drain tile system repairs) or minor field realignments and workspace shifts per landowner needs and requirements that do not affect other landowners or sensitive environmental resource areas. All construction or restoration activities outside of the authorized areas are subject to all applicable survey, permit requirements, and landowner easement agreements.

The construction right-of-way width for a project shall not exceed 75 feet or that described in the FERC application unless otherwise modified by a FERC Order. However, in limited, non-wetland areas, this construction right-of-way width may be expanded by up to 25 feet without Director approval to accommodate full construction right-of-way topsoil segregation and to ensure safe construction where topographic conditions (such as side-slopes) or soil limitations require it. Twenty-five feet of extra construction right-of-way width may also be used in limited, non-wetland or non-forested areas for truck turn-arounds where no reasonable alternative access exists.

20160727-4003 FERC PDF (Unofficial) 07/27/2016

Project use of any additional areas is subject to landowner or land management agency approval and compliance with all applicable survey and permit requirements. When additional areas are used, each one should be identified and the need explained in the weekly or biweekly construction reports to the FERC, if required. The following material should be included in the reports:

- The location of each additional area by station number and reference to a previously filed alignment sheet, or updated alignment sheets showing the additional areas;
- Identification of the filing at FERC containing evidence that the additional areas were previously surveyed; and
- A statement that landowner approval has been obtained and is available in project files.

Prior written approval of the Director is required when the authorized construction right-of-way width would be expanded by more than 25 feet.

4.2 Residential Area Construction

The care exercised by construction crews and the qualities of cleanup following construction are paramount concerns of homeowners. National will make every effort to ensure that all construction activities minimize adverse impacts to residences and that cleanup is quick and thorough.
Throughout construction, traffic lanes and access to homes will be maintained except for the brief periods essential for laying the new pipeline. The Contractor will erect temporary safety fences in the vicinity of streets and homes to keep the public away from the construction zone. National may use techniques such as stovepipe and drag section construction in order to minimize the impacts of construction in residential areas on a site-specific basis. Site-specific residential mitigation plans will be utilized in areas with residences within 25 feet from the edge of construction right-of-way.

Homeowners will be notified in advance of any scheduled disruption of household utilities and the duration of the interruption will be kept as brief as possible. Representatives of the local utility companies will be on-site during construction when necessary. In addition, National will strive to accommodate any special concerns regarding ornamental shrubs, trees, or structures by avoiding them as long as such avoidance will not unduly interfere with construction and operation of the pipeline.

National will take measures to ensure that construction activities will not prevent access to residential areas by fire and emergency vehicles. At least one lane of traffic will be kept open for emergency vehicles when constructing on or across residential streets. During the brief period of road closure, steel plates will be available on site to cover the open area to permit travel by emergency vehicles.

In residential areas, topsoil replacement (i.e., importation of topsoil) is an acceptable alternative to topsoil segregation. Where topsoil segregation is conducted, maintain separation of salvaged topsoil and subsoil throughout all construction activities. Segregated topsoil may not be used for padding the pipe or filling sandbags.

Immediately after backfilling, residential areas will be cleaned up, and all construction debris will be removed. Lawns will be raked, topsoil added as necessary, and lawns restored per agreements with landowners. Ornamental shrubs will be replaced where possible. Contractors will restore fences, mailboxes, and other structures removed during construction. Sidewalks, driveways, and roads will be restored as soon as practical.

4.3 Agricultural Area Construction

In predominantly agricultural areas, National will have Agricultural Inspectors/Specialists on site during construction in accordance with the Agricultural Inspection section of this Plan. In addition, prior to construction, National's Drainage Specialists (in coordination with National land agents) will contact farm landowners and operators and the local agencies for planning purposes described in previous section.

4.3.1 Topsoil Segregation

Unless the landowner or land management agency specifically approves otherwise, prevent the mixing of topsoil with subsoil by stripping topsoil from either the full work area or from the trench and subsoil storage area (ditch plus spoil side method) in:

- Cultivated or rotated croplands, and managed pastures;
- Residential areas;
- Hayfields; and
- Other areas at the landowner's or land managing agency's request.

In residential areas, importation of topsoil is an acceptable alternative to topsoil segregation.
Where topsoil segregation is required, the project sponsor must:

- Segregate at least 12 inches of topsoil in deep soils (more than 12 inches of topsoil); and
- Make every effort to segregate the entire topsoil layer in soils with less than 12 inches of topsoil.

Maintain separation of salvaged topsoil and subsoil throughout all construction activities.

Segregated topsoil may not be used for padding the pipe, constructing temporary slope breakers or trench plugs, improving or maintaining roads, or as a fill material.

Stabilize topsoil piles and minimize loss due to wind and erosion with use of sediment barriers, mulch, temporary seeding, tackifiers, or functional equivalents, where necessary.

4.3.2 Drain Tiles

All drainage tiles encountered shall be marked, maintained during construction, and restored to as good or better condition upon completion of construction. *BMP Drawing Nos. 30, 30A and 42* provide typical information for drain tiles where encountered. Specific details on drain tile monitoring activities are provided in Section 7.6.1.

- Mark locations of drain tiles damaged during construction. Encountered drain tiles shall be referenced and flagged with stakes located adjacent to the ditch, and the right-of-way edge (outer perimeters).

- When it is necessary to maintain flow in the drainage system during construction, a temporary pipe bridge shall be installed across the trench. Smaller feeder drains shall be capped so that flows are diverted to the primary drain on which the Pipe Bridge has been installed.
- Open ends of tile shall be covered to prevent ingress of dirt, rock, or wildlife.
- All drainage systems shall be probed to determine if damage has occurred. All tiles damaged during construction shall be flagged by the trenching inspector.
- Repair or replace all damaged drain tiles to their original or better condition under the supervision of the Drainage Specialist. Do not use filter-covered drain tiles unless the local soil conservation authorities or land management agencies and landowner agree. Use Qualified Drainage specialists for testing and repairs to ensure proper repairs and adequate probing/testing of the repaired or replaced drainage systems.
- For new pipelines in areas where drain tiles exist or are planned, ensure that the depth of cover over the pipeline is sufficient to avoid interference with drain tile systems. For adjacent pipeline loops in agricultural areas, install the new pipeline with at least the same depth of cover as the existing pipeline(s).
- Other drainage-related impacts such as water boils and right-of-way saturation that are created or exacerbated by the pipeline project will be mitigated during monitoring and follow-up remediation (see Section 9.1 - Monitoring and Maintenance).
- Detailed records of drainage system repairs shall be maintained and upon request given to the landowner and the local soil conservation authority or land management agency offices for future reference.

4.3.3 Irrigation

- Maintain water flow in crop irrigation systems, unless shutoff is coordinated with the affected parties.

4.4 Equipment Crossings

Construction of equipment crossings will occur during the clearing or grading process. Protective measures will include the use of timber mats laid adjacent to and across streambeds if banks are high enough, flume pipe covered by fill material (clean gravel or crushed stone) or portable bridges approved by the Environmental Inspector. The size and number of flume pipes will be sufficient for maximum anticipated flows. Typical crossing method information is presented on *BMP Drawing Nos. 2, 9, 12, 13 and 21.*

Flume pipes will conform to waterbody crossing dimensions and alignments. Stream channels will <u>not</u> be permanently straightened or realigned to conform with flume pipe dimensions or for any other reasons, unless a permit has been acquired to do so.

4.5 Road Crossings and Access Points

An entrance pad *(BMP Drawing No. 1)* is a temporary entrance/exit located where construction traffic enters or leaves the right-of-way onto or from a roadway or other paved surface. This access pad is typically constructed of stone or gravel. Strip topsoil and segregate for access areas and roads in agricultural and residential lands.

A stabilized entrance pad is intended to reduce off-site sedimentation by eliminating the tracking of excess soil onto paved public roadways. The entrance pad serves as the designated point at which all construction traffic can access and exit the right-of-way. If crushed stone access pads are used in residential or active agricultural areas, place the stone on durable synthetic fabric to facilitate removal.

The Grading Crew will install rock entrances at public roads. If the job kicks off at a point where an entrance pad is required, the entrance pad will be installed as soon as the immediate area required for the pad is stumped and rock can be brought in. This shall be within forty-eight (48) hours from the time the Grading Crew move onto the location.

For other locations along the pipeline where entrance pads are required, the pads will be installed as the Grading Crew progresses to these locations, but no later than forty-eight (48) hours from the time they reach these locations. Also;

- Maintain safe and accessible conditions at all road crossings and access points during construction.
- If crushed stone access pads are used in residential or agricultural areas, place the stone on synthetic fabric to facilitate removal.
- Minimize the use of tracked equipment on public roadways. Remove any soil or gravel spilled or tracked onto roadways daily or more frequent as necessary to maintain safe road conditions. Repair any damages to roadway surfaces, shoulders, and bar ditches.

4.6 Interim Stabilization

Where activity ceases for 20 or more days or jobs not cleaned up by October 15 will be final graded and seeded with Aroostook (if available) winter rye at a rate of 170 pounds per acre. One hundred percent (100%) mulch will be spread on non-stabilized slopes of 10% or steeper. Only weed-free straw mulch, not hay mulch, will be used where mulch is needed on agricultural land. Before permanent seeding is planted in spring, the right-of-way will be inspected and any grade or water control structures that have been damaged over the winter will be repaired.

4.7 Slope Breakers

Install erosion controls immediately after initial disturbance of the soil. Erosion controls must be properly maintained throughout construction (on a daily basis) and reinstalled as necessary (such as after backfilling of the trench) until replaced by permanent erosion controls or restoration is compete.

- Slope breakers (waterbars) are intended to reduce runoff velocity and divert water off the construction ROW. Slope breakers may be constructed of materials such as soil, silt fence; staked hay or straw bales (straw only in agricultural lands), sand bags, or filter socks.

- Install slope breakers on all disturbed areas, as necessary to avoid excessive erosion. Slope breakers must be installed on slopes greater than 5 percent where the base of the slope is less than 50 feet from waterbody, wetland, road crossings and the following spacing (closer spacing if necessary): (See *BMP Drawing No.* 8A)

20160727-4003 FERC PDF (Unofficial) 07/27/2016

PENNSYLVANIA Installation		NEW YORK Installation	
Slope	**Distance**	**Slope**	**Distance**
<5%	250 Feet	<5%	125 Feet
5 - 15%	150 Feet	5 - 10%	100 Feet
>15 - 30%	100 Feet	>10 – 20%	75 Feet
>30%	50 Feet	>20 – 35%	50 Feet
		>35%	25 Feet

- Direct the outfall of each slope breaker to a stable, well-vegetated area or construct an energy-dissipating device at the end of the slope breaker and off the construction ROW (*See BMP Drawing No. 31*).
- Position the outfall of each slope breaker to prevent sediment discharge into wetlands, waterbodies, or other sensitive environmental resource areas.
- Inspect and maintain slope breakers throughout the construction project.

4.8 Sediment Barriers

Sediment barriers are intended to stop the flow of sediments and prevent the deposition of sediments beyond approved workspaces or into sensitive resources. They may be constructed of materials such as silt fence, staked hay or straw bales (straw only in agricultural lands), compacted earth (e.g., drivable berms across travel ways), sand bags, filter socks, or other appropriate materials. Typical sediment barrier information is presented on *BMP Drawing Nos. 5 and 22*.

- At a minimum, install and maintain temporary sediment barriers across the entire construction right-of-way at the base of slopes greater than 5 percent where the base of the slope is less than 50 feet from a waterbody, wetland, or road crossing until revegetation is successful as defined in this Plan. Leave adequate room between the base of the slope and the sediment barrier to accommodate ponding of water and sediment deposition.
- Where wetlands or waterbodies are adjacent to and down slope of construction work areas, install sediment barriers along the edge of these areas, as necessary to prevent sediment flow into the wetland or waterbody.
- Install temporary sediment barriers at the base of slopes adjacent to road crossings until disturbed vegetation has been reestablished.
- Inspect and maintain all temporary sediment barriers throughout the construction project and after .5- inches of rainfall within a 24-hour period.
- Maintain all temporary sediment barriers in place until permanent revegetation measures are successful or the upland areas adjacent to wetlands, waterbodies, or roads are stabilized.
- Contractor shall incorporate appropriate erosion/sediment control measures in pipe yards.
- Remove temporary sediment barriers from areas that are successfully revegetated. In agricultural lands, if access to restored farmlands is required to remove sediment barriers, access will be limited to light-weight wide tired vehicles.

4.9 Mulch

- Apply mulch on all slopes (except in cultivated cropland) concurrent with or immediately after seeding, where necessary to stabilize the soil surface and to reduce wind and water erosion. Spread mulch uniformly over the area to cover at least 75 percent of the ground surface at a rate of 2 tons/acre of straw unless the local soil conservation authorities, landowner, or land managing agency approves otherwise in writing. In agricultural lands, straw mulch application will be conducted at the discretion of the Agricultural inspector.
- Mulch can consist of weed-free straw, hay, wood fiber hydro-mulch, erosion control fabric, or some functional equivalent. Hay will not be utilized in agricultural lands.
- If mulching <u>before</u> seeding: increase mulch application on all slopes within 100 feet of waterbodies and wetlands to a rate of 3 tons/acre of straw or equivalent.
- Mulch all disturbed upland areas (except cultivated croplands) <u>before</u> seeding if: Final cleanup, including final grading and installation of permanent erosion control measures, is not completed in an area within 20 days after the trench in that area is backfilled (10 days in residential areas); or, Construction or restoration activity is interrupted for extended periods, such as when seeding cannot be completed due to seeding period restrictions.
- If mulching <u>before</u> seeding, increase mulch application on all slopes within 100 feet of waterbodies and wetlands to a rate of 3 tons/acre of straw or equivalent.
- If wood chips are used as mulch, do not use more than 1 ton/acre and add the equivalent of 11 lbs/acre available nitrogen (at least 50 percent of which is slow release).
- On all dry, sandy sites and slopes greater than 8%, spread mulch uniformly over the area to cover at least 75% of the ground surface at a rate of 3 tons/acre of straw or hay or its equivalent, unless the local soil conservation authority or land management agency makes other recommendations in writing. Hay will not be utilized in agricultural lands.
- If a mulch blower is used, the strands of the mulching material shall be at least 8 inches long to allow anchoring.
- Ensure that mulch is adequately anchored to minimize loss due to wind and water.
- When anchoring by mechanical means, use a mulch-anchoring tool to properly crimp the mulch to a depth of 2 to 3 inches. When anchoring with liquid mulch binders, use rates recommended by the manufacturer. Do not use liquid mulch binders within 100 feet of wetlands or waterbodies, except where the product is certified environmentally non-toxic by the appropriate state or federal agency or independent standards-setting organization.
- Do not use synthetic monofilament mesh/ netted erosion control materials in areas designated as sensitive wildlife habitat, unless the product is specifically designed to minimize harm to wildlife. Anchor the erosion control fabric with staples or other appropriate devices.

4.10 Trench Dewatering

Trench dewatering is the removal of excess runoff and groundwater (that has accumulated and is occupying the ditch line) to allow for the installation of the pipe or the completion of a pipeline tie-in, and the dry backfilling (as defined below) of the ditch. The removal of any excess water within the ditch line prior to backfilling is critical in

agricultural lands; and permits ditch inspection and allows for a drier ditch to backfill the spoil material. This enables the right-of-way to be effectively restored sooner, by the relatively faster return of workable conditions, as opposed to extended waiting until spoil material backfilled in a wet ditchline dries enough to be able to have the heavy equipment work over. Typically, the trench is dewatered, and is maintained in a dewatered state not higher in water level than six inches above the top of the trench bottom sand bagpipe supports, during the backfilling activity ("dry backfilling").

Trench dewatering management will be accomplished by using a combination of efforts or BMPs (See *BMP Drawing Nos. 5, 22, 28, 31, 35 and 39*) dependent upon the specific site conditions and may include the following:

- Sediment filtering bags *(BMP Drawing No. 28)* and/or other equivalent sediment control structures for pumped water should be used whenever water is pumped from the pipeline trench. Sediment filter bags (use only Non-woven Geotextile filter bags), when implemented and maintained properly, prevent the discharge of heavily silt-laden water - effectively trapping particles larger than approximately 150 microns. Filter bags shall be used in well-vegetated areas, providing additional filtration upon discharge. Discharge to agricultural lands will not be conducted in active crop areas unless dry conditions are present and with landowner permission. The pumping rate should not exceed the maximum recommended by the Manufacturer (for example: Pumping rate through the filter bags shall be no greater than 750 gpm or ½ the maximum specified by the manufacturer, whichever is less). The filter bags will be changed when they become half full. Their silt contents will not be deposited on agricultural lands.
- Discharge into approved upland vegetated (grassy) areas onto stable erosion resistant areas, located such that it does not allow the water to return to the right-of-way ditch line.
- Based on previous experience, filter bags have provided successful means in controlling the discharge of turbid waters If the water being discharged from the filter bag appears "milky" or excessively cloudy, then sediment corrals can be utilized to augment filter bag use, positioned at least 25 feet from any waterbody and closely monitored to ensure proper function to prevent turbid water from entering a waterbody.
- Trench dewatering using floating pump or supporting pump intakes to reduce sediments suspended in water.
- Use a splashboard or dissipation device at the point of discharge to prevent scouring of the ground.
- Filtration bags, a straw bale basin, filter cloth basins or a combination of these devices are acceptable methods of filtration for discharge of water in an insufficiently vegetated or wetland area.
- Pumping water to temporary holding areas (e.g., other sections of pipeline trench, nearby or crossed ditches, external portable tanks).
- Planning dewatering into construction sequencing to minimize amount of dewatering required. For example, during the lowering-in phase, dewatering should be accomplished before requisite construction activity occurs (such as in the morning) and backfill activity should be initiated as soon as possible following pipe installation to prevent the ditch from refilling with water when a high ground water table is present. In agricultural lands, dewatering level will be maintained, throughout backfilling operations, to no more than six inches above the top of the trench-bottom pipe support sand bags to ensure dry backfilling.
- In agricultural lands trench-dewatering activities will be coordinated with the Environmental Inspector by the Agricultural Inspector/Drainage Specialists.

4.11 Temporary Trench Breakers

- Trench breakers are intended to slow the flow of subsurface water along the trench. Trench breakers may be constructed of materials such as bentonite, clay, sand bags or polyurethane foam, subsoil earth filled bags or equivalent (refer to permit or permitting agency for acceptable materials). Topsoil shall not be used for filling trench breaker bags. In agricultural fields and residential areas where slope breakers are not typically required, install trench breakers at the spacing in the following table. (See BMP Drawing Nos. 6Aand 8A).
- At a minimum, install a trench breaker at the base of slopes greater than 5 percent where the base of the slope is less than 50 feet from a waterbody or wetland and where needed to avoid draining a waterbody or wetland. Install trench breakers at wetland boundaries, as specified (See BMP Drawing No. 6A). Do not install trench breakers within a wetland.
- Trench breakers will be installed at intervals according to the table below and at additional locations, if necessary, in agricultural lands as recommended by the Agricultural Inspector. The base level of each breaker is established on the trench floor, prior to pipe laying, to ensure the completed breaker's control against significant water-piping and internal erosion. The bulk remainder of each trench breaker will be installed after the pipe is laid in the ditch and prior to backfill. *(See BMP Drawing No. 6A*)
- An Engineer or similarly qualified professional shall determine the need for and spacing of trench breakers. Otherwise, trench breakers shall be installed at intervals as per the following table and upslope of slope breakers and/or the site specific SWPPP or E&S Plan (See BMP Drawing Nos. 6A and 8A).

Temporary Trench Breakers: Hard / Soft Plug Spacing

Slope	Hard Plug Spacing	or	Soft Plug Spacing
<5%	N/A		1000 Feet
5 - 15%	900 Feet		600 Feet
>15 - 30%	600 Feet		400 Feet
>30%	300 Feet		200 Feet

In agricultural lands, at the direction of the Environmental/Agricultural Inspector trench breaker heights may be adjusted to full, one-half, two-thirds, or alternating heights based on field conditions.

4.13 Maintenance of Erosion Control Devices

Inspecting and ensuring the maintenance of temporary erosion control measures will be conducted at least:

- On a daily basis in areas of active construction or equipment operation.
- On a weekly basis in areas with no construction or equipment operation.
- Within 24 hours of 0.5 inch of rainfall.
- Slope breakers will be checked and repaired at the end of each day where construction traffic has disturbed them.

20160727-4003 FERC PDF (Unofficial) 07/27/2016

5 WATERBODY CROSSINGS

A summary of the waterbody crossings and locations are included in the waterbody tables.

5.1 Construction Restrictions

No construction may take place in or affecting banks of any streams:

Unless expressly permitted or further restricted by the appropriate federal or state agency in writing on a site-specific basis, instream work, except that required to install or remove equipment bridges, must occur during the following time windows:

Coldwater fisheries - June 1 through September 30

Coolwater and warmwater fisheries - June 1 through November 30.

5.2 Stream Buffer Area

Stream buffer areas must be maintained at all times. The buffer area is that area 50 feet from the top of banks on both sides of stream. Activities such as stacking cut logs, burning cleared brush, discharging water from trenches, welding pipe sections, refueling and maintaining equipment should be done outside of buffer areas. These areas should also be seeded and mulched immediately after pipeline installation. Stream crossings will be treated as a special construction crossing in order to minimize the amount of time required to complete construction. Construction equipment will not be parked or stored in the buffer area. No fuel storage, fuel transfer, oil change or hydraulic fluid additions shall occur within 100 feet of any waterway.

5.3 Maintenance of Stream Crossing Control Devices

Construction erosion control devices will be installed prior to earth disturbance of the area. They will be maintained at all times. Inspecting and ensuring the maintenance of temporary erosion control measures will be conducted at least:

- On a daily basis in areas of active construction or equipment operation.
- On a weekly basis in areas with no construction or equipment operation.
- Within 24 hours of 0.5 inch of rainfall.

5.4 Additional Work Space Areas

Locate all extra work areas (such as staging areas and additional spoil storage areas) at least 50 feet away from water's edge, except where the adjacent upland consists of cultivated or rotated cropland or other disturbed land.

The project sponsor shall file with the Secretary for review and written approval by the Director, a site-specific justification for each extra work area with a less than 50-foot setback from the water's edge, except where the adjacent upland consists of cultivated or rotated cropland or other disturbed land. The justification must specify

20160727-4003 FERC PDF (Unofficial) 07/27/2016

the conditions that will not permit a 50-foot setback and measures to ensure the waterbody is adequately protected.

Limit the size of extra work areas to the minimum needed to construct the waterbody crossing.

5.5 Spoil Pile Placement/Control

All spoil from minor and intermediate waterbody crossing, and upland spoil from major waterbody crossings, must be placed in the construction right-of-way at least 10 feet from the water's edge or in additional extra work areas.

Use sediment barriers to prevent the flow of spoil or silt-laden water into any waterbody.

5.6 Waterbody Crossing Procedures

Comply with COE, or its delegated agency, permit terms and conditions.

Construct crossings as close to perpendicular to the axis of the waterbody channel as engineering and routing conditions permit.

Leave at least 15 feet of ground on either side of the waterbody (top of bank) as a natural, vegetative strip (except for the trench and equipment crossing). All woody species will be cut flush to grade and only the stumps in the trench line will be removed. When necessary, stumps at the bridge crossing area may be removed to accommodate the safe installation of the construction bridge.

Where pipelines parallel a waterbody, maintain at least 15 feet of undisturbed vegetation between the waterbody (and any adjacent wetland) and the construction right of way, except where maintaining this offset will result in greater environmental impact.

Where waterbodies meander or have multiple channels, route the pipeline to minimize the number of waterbody crossings.

Maintain adequate waterbody flow rates to protect aquatic life, and prevent the interruption of existing downstream uses

Waterbody buffers (e.g., extra work area setbacks, refueling restrictions) must be clearly marked in the field with signs and/or highly visible flagging until construction-regulated ground disturbing activities are complete.

Crossing of waterbodies when they are dry or frozen and not flowing may proceed using standard upland construction techniques in accordance with the Plan, provided that the Environmental Inspector verifies that water is unlikely to flow between initial disturbance and final stabilization of the feature. In the event of perceptible flow, the project sponsor must comply with all applicable Procedure requirements for "waterbodies", as defined in 5.11 Waterbody Size Classification.

20160727-4003 FERC PDF (Unofficial) 07/27/2016

5.7 Pipeline Construction at Streams

- Install filter fence across the right-of-way prior to construction. (See *BMP Drawing No.* 5 for proper fence installation) Make any repairs to fence as necessary after each working day. Replace filter fence across the travel area with straw bales during construction. (See *BMP Drawing No.* 22 for proper installation of straw bales)
- The stream is not to be diverted or the flow restricted. No filter fence or straw bales are to be placed directly into stream flow.
- The pipe is to be readied outside the stream buffer area prior to trenching and then installed immediately.
- Install trench breakers at the edge of stream during construction as per *BMP Drawing No.* 6. Ditching is to be performed from stream banks where possible.

5.8 Equipment Bridges

Only clearing equipment and equipment necessary for installation of equipment bridges may cross waterbodies prior to bridge installation. Limit the number of such crossings of each waterbody to one per piece of clearing equipment.

Construct and maintain equipment bridges to allow unrestricted flow and to prevent soil from entering the waterbody. Examples of such bridges include:

- equipment pads and culvert(s)
- equipment pads or railroad car bridges without culverts
- clean rock fill and culvert(s)
- flexi-float or portable bridges.

Additional options for equipment bridges may be utilized that achieve the performance objectives noted above. Do not use soil to construct or stabilize equipment bridges.

Design and maintain each equipment bridge to withstand and pass the highest flow expected to occur while the bridge is in place. Align culverts to prevent bank erosion or streambed scour. If necessary, install energy dissipating devices downstream of the culverts.

Design and maintain equipment bridges to prevent soil from entering the waterbody.

Remove temporary equipment bridges as soon as practicable after permanent seeding.
If there will be more than 1 month between final cleanup and the beginning of permanent seeding and reasonable alternative access to the right-of-way is available, remove temporary equipment bridges as soon as practicable after final cleanup.

Obtain any necessary approval from the COE, or the appropriate state agency for permanent bridges.

20160727-4003 FERC PDF (Unofficial) 07/27/2016

5.9 Dry-Ditch Crossing Methods

Unless approved otherwise by the appropriate federal or state agency, install the pipeline using one of the dry-ditch methods outlined below for crossings of waterbodies up to 30 feet wide (at the water's edge at the time of construction) that are state-designated as either coldwater or significant coolwater or warmwater fisheries, or federally-designated as critical habitat.

5.9.1 Dam and Pump

The dam-and-pump method may be used without prior approval for crossings of waterbodies where pumps can adequately transfer streamflow volumes around the work area, and there are no concerns about sensitive species passage.

Implementation of the dam-and-pump crossing method must meet the following performance criteria:

- use sufficient pumps, including on-site backup pumps, to maintain downstream flows
- construct dams with materials that prevent sediment and other pollutants from entering the waterbody (e.g., sandbags or clean gravel with plastic liner)
- screen pump intakes to minimize entrainment of fish
- prevent streambed scour at pump discharge
- continuously monitor the dam and pumps to ensure proper operation throughout the waterbody crossing.

5.9.2 Flume Crossing

The flume crossing method requires implementation of the following steps:

- install flume pipe after blasting (if necessary), but before any trenching
- use sand bag or sand bag and plastic sheeting diversion structure or equivalent to develop an effective seal and to divert stream flow through the flume pipe (some modifications to the stream bottom may be required to achieve an effective seal
- properly align flume pipe(s) to prevent bank erosion and streambed scour
- do not remove flume pipe during trenching, pipelaying, or backfilling activities, or initial streambed restoration efforts
- remove all flume pipes and dams that are not also part of the equipment bridge as soon as final cleanup of the stream bed and bank is complete.

5.9.3 Horizontal Directional Drill

For each waterbody or wetland that would be crossed using the HDD method, file with the Secretary for the review and written approval by the Director, a plan that includes:

- site-specific construction diagrams that show the location of mud pits, pipe assembly areas, and all areas to be disturbed or cleared for construction
- justification that disturbed areas are limited to the minimum needed to construct the crossing;
- identification of any aboveground disturbance or clearing between the HDD entry and exit workspaces during construction
- a description of how an inadvertent release of drilling mud would be contained and cleaned up
- a contingency plan for crossing the waterbody or wetland in the event the HDD is unsuccessful and how the abandoned drill hole would be sealed, if necessary.

The requirement to file HDD plans does not apply to projects constructed under the automatic authorization provisions in the FERC's regulations.

5.10 HDD - Inadvertent Release Contingencies

In the absence of a site-specific plan the following is a contingency plan to prepare for and address the unlikely event of release (or "frac-out") of drilling fluids (non-toxic bentonite –a clay-based fluid slurry) to the surface waters at these crossings.

Planning & Monitoring:

- Prior to starting drilling operations, the drilling contractor will ensure appropriate containment equipment (such as earth moving equipment, portable pumps, hay bales, silt fencing, etc) will be readily available and stored at the drilling site throughout the process.
- Inspection and drilling personnel will review these monitoring and response procedures prior to initiating the drilling activities;
- The environmental inspector will complete visual surface monitoring along the HDD path during drilling operations. An increased inspection frequency will be undertaken when the drill path passes below the stream elevation.
- Monitor the use and return of the drilling fluids during the drilling processes.
- If a frac-out or release of drilling fluid to a stream or waterbody occurs, the environmental inspector will follow the project's established chain of command and permit requirements for reporting to the project team, regulatory agencies and landowners.

Response Measures:

- If there is a frac-out, the following contingency measures (individually, or in combination as needed) will be implemented by the Contractor to stop or minimize the release and to clean it up (recover and properly dispose of) released drilling fluids:
    - Decrease the drilling fluid circulation pressures;
    - Size the drill hole to remove blockages (i.e. cleaning the drill hole to remove potential blockages, thereby allowing the fluid to flow within the drill hole and not into the geologic formation);

- Thicken the drilling fluid properties by increasing bentonite content; and/or
- If necessary, make adjustments to the drilling alignment.
- If the release location is in an upland area, barriers (i.e. hay bales, sand bags, silt fences, etc.) will be staged or berms will be constructed immediately around the release point as containment to keep any material from migrating to surface waters or wetlands. If the amount of an upland release does not allow practical collection, the affected area will be diluted with fresh water and allowed to dry.
- In the event that a frac out does occur that impacts the stream bed, the first response by the contractor will be to halt the pumping of the drilling fluid and communicate with the environmental inspector and standby staff who will install a silt curtain downstream to minimize the area of the stream potentially impacted.
- Collected or contained drilling fluid will be removed by pump or vacuum truck.

- If necessary, the Environmental Inspector will require that the drilling operations be temporarily reduced or suspended so that the extent of the release can be assessed and corrective actions, if any are required, can be implemented.

The drill cuttings generated from the drilling operations will be stockpiled at upland locations in a manner that prevents their release into any surface waters or wetlands. Excess drilling fluid and cuttings will be transported to an approved upland disposal site in accordance with the project permit conditions.

5.11 Waterbody Size Classification

"minor waterbody" includes all waterbodies less than or equal to 10 feet wide at the water's edge at the time of crossing.

"intermediate waterbody" includes all waterbodies greater than 10 feet wide but less than or equal to 100 feet wide at the water's edge at the time of crossing.

"major waterbody" includes all waterbodies greater than 100 feet wide at the water's edge at the time of crossing.

5.12 Crossing of Minor Waterbodies

Where a dry-ditch crossing is not required, minor waterbodies may be crossed using the open-cut crossing method, with the following restrictions:

- Except for blasting and other rock breaking measures, complete instream construction activities (including trenching, pipe installation, backfill, and restoration of the streambed contours) within 24 hours. Streambanks and unconsolidated streambeds may require additional restoration after this period.
- Limit use of equipment operating in the waterbody to that needed to construct the crossing.
- Equipment bridges are not required at minor waterbodies that do not have a state-designated fishery classification or protected status (e.g., agricultural or intermittent drainage ditches). However, if an equipment bridge is used it must be constructed as described in section 5.8.

20160727-4003 FERC PDF (Unofficial) 07/27/2016

5.13 Crossing of Intermediate Waterbodies

Where a dry-ditch crossing is not required, intermediate waterbodies may be crossed using the open-cut crossing method, with the following restrictions:

- Complete instream construction activities (not including blasting and other rock breaking measures) within 48 hours, unless site-specific conditions make completion within 48 hours infeasible.
- Limit use of equipment in the waterbody to that needed to construct the crossing.
- All other construction equipment must cross on an equipment must cross on an equipment bridge as specified in section 5.8.

5.14 Crossing of Major Waterbodies

Before construction, the project sponsor shall file with the Secretary for the review and written approval by the Director a detailed, site-specific construction plan and scaled drawings identifying all areas to be disturbed by construction for each major waterbody crossing (the scaled drawings are not required for any offshore portions of pipeline projects). This plan must be developed in consultation with the appropriate state and federal agencies and shall include extra work areas, spoil storage areas, sediment control structures, etc., as well as mitigation for navigational issues. The requirement to file major waterbody crossing plans does not apply to projects constructed under the automatic authorization provisions of the FERC's regulations.

The Environmental Inspector may adjust the final placement of the erosion and sediment control structures in the field to maximize effectiveness.

5.15 Temporary Erosion and Sediment Control

Install sediment barriers (as defined in section IV.F.3.a of the Plan) immediately after initial disturbance of the waterbody or adjacent upland. Sediment barriers must be properly maintained throughout construction and reinstalled as necessary (such as after backfilling of the trench) until replaced by permanent erosion controls or restoration of adjacent upland areas is complete. Temporary erosion and sediment control measures are addressed in more detail in the Plan; however, the following specific measures must be implemented at stream crossings:

- Install sediment barriers across the entire construction right-of-way at all waterbody crossings, where necessary to prevent the flow of sediments into the waterbody. Removable sediment barriers (or driveable berms) must be installed across the travel lane. These removable sediment barriers can be removed during the construction day, but must be re-installed after construction has stopped for the day and/or when heavy precipitation is imminent;
- Where waterbodies are adjacent to the construction right-of-way and the right-of-way slopes toward the waterbody, install sediment barriers along the edge of the construction right-of-way as necessary to contain spoil within the construction right-of-way and prevent sediment flow into the waterbody; and

20160727-4003 FERC PDF (Unofficial) 07/27/2016

- Use temporary trench plugs at all waterbody crossings, as necessary, to prevent diversion of water into upland portions of the pipeline trench and to keep any accumulated trench water out of the waterbody.

5.16 Trench Dewatering

Dewater the trench (either on or off the construction right-of-way) in a manner that does not cause erosion and does not result in silt-laden water flowing into any waterbody. Remove the dewatering structures as soon as practicable after the completion of dewatering activities.

6. WETLAND CROSSINGS

A summary of the wetland crossings and locations are included in the wetland tables.

6.1 General Guidelines

National will insure that all construction personnel are informed that impacts on all vegetation will be kept to a minimum. Wide tracked equipment will be used and standing water will be maintained at normal levels to insure that water level and flow are kept at pre-construction levels. Where water levels are temporarily high, as a result of a recent heavy rainfall, the Company Representative may direct that the construction be postponed until after the water levels subside.

Comply with COE, or it's delegated agency, permit terms and conditions.

Vehicular traffic in wetlands and wet areas will be restricted to a minimum and access avoided to the extent possible. Wetland crossings will be treated as a special construction crossing in order to minimize the amount of time required to complete construction. Construction equipment will not be parked or stored in the wetland. No fuel storage, fuel transfer, oil change or hydraulic fluid additions shall occur within 100 feet of any wetland.

The project sponsor shall conduct a wetland delineation using the current federal methodology and file a a wetland delineation report with the Secretary before construction. The requirement to file a wetlands delineation report does not apply to projects constructed under the automatic authorization provisions in the FERC's regulations.

This report shall identify:

- By milepost all wetlands that would be affected
- The National Wetlands Inventory (NWI) classification for each wetland
- The cross length of each wetland in feet
- The area of permanent and temporary disturbance that would occur in each wetland by NWI classification type

The requirements outlined in this section do not apply to wetlands in cultivated or rotated cropland. Standard upland protective measures, including workspace and topsoiling requirements, apply to these agricultural wetlands.

Route the pipline to avoid wetland areas to the maximum extent possible. If a wetland cannot be avoided or crossed by following an existing right-of-way, route the new pipeline in a manner that minimizes disturbance to wetlands. Where looping an existing pipeline, overlap the existing pipeline right-of-way with the new construction right-of-way. In addition, locate the loop line no more than 25 feet away from the existing pipeline unless site-specific constraints would adversely affect the stability of the existing pipeline.

Limit the width of the construction right-of-way to 75 feet or less. Prior written approval of the Director is required where topographic conditions or soil limitations require that the construction right-of-way width within the boundaries of a federally delineated wetland be expanded beyond 75 feet. Early in the planning process the project sponsor is encouraged to identify site-specific areas where excessively wide trenches could occur and/or where spoil piles could be difficult to maintain because existing soils lack adequate unconfined compressive strength.

Wetland boundaries and buffers must be clearly marked in the field with signs and/or highly visible flagging until construction-related ground disturbing activities are complete.

Implement the measures of sections 5 and 6 in the event a waterbody crossing is located within or adjacent to a wetland crossing. If all measures of sections 5 and 6 cannot be met, the project sponsor must file with the Secretary a site-specific crossing plan for review and written approval by the Director before construction. This crossing plan shall address at a minimum:

- Spoil control
- Equipment bridges
- Restoration of waterbody banks and wetland hydrology
- Timing of the waterbody crossing
- Method of crossing
- Size and location of all extra work areas

Do not locate aboveground facilities in any wetland, except where the location of such facilities outside of wetlands would prohibit compliance with U.S. Department of Transportation regulations.
The following describes the proposed wetland crossing techniques to reduce construction-related impacts. Typical wetland crossing information is shown in *BMP Drawing Nos. 4 and 4A*. Modification to this plan may be made as dictated by soil moisture conditions at the time of construction.

6.1.1 Construction in Dry Wetlands

Dry Wetland: No standing water or saturated soil at time of construction.

- Standard pipeline construction methods can be used in wetlands where soils are dry enough at the time of construction to support equipment.

- In dry wetlands topsoil segregation must be used (as long as there is sufficient topsoil present to allow for mechanical separation by equipment).
- Install filter fence across ROW at edge of wetland.
- If spoil and silt cannot be contained within the ROW (i.e., approved working limits), install filter fence at the edge of the construction ROW; remove during cleanup.
- Minimize vegetation clearing and stump removal within the wetland.
- Remove cut vegetation and stumps in trench line.
- Segregate topsoil over trench-line.
- Install trench breakers at each wetland boundary (on upland side).
- Restore topsoil and seed with Annual Ryegrass (see Revegetation section of this Plan).

6.1.2 Construction in Saturated Wetlands

Saturated Wetland: Standing water or highly saturated soil at time of construction.

- Wetlands topsoil segregation is not required.
- Minimize vegetation clearing and stump removal.
- Only remove cut vegetation and stumps in trench line.
- Permanent slope breakers will be installed at the base of all slopes adjacent to wetlands.
- Clean rock with Geo-textile or timber mats can be used for the temporary road.
- Timber mats can only be two (2) layers deep.
- Remove any timber mats used during construction in wetlands.
- Weld pipe outside the wetlands and carry in or use the push pull method.
- Install trench breaker at each wetland boundary (on upland side).
- Do not use brush mats.
- Do not use upland soils for temporary roads.

6.2 Standard Pipeline Construction

Standard pipeline construction can be used in wetlands where soils are dry enough at the time of construction to support equipment. This crossing method requires the segregation of topsoil from subsoil (as long as there is sufficient topsoil present to allow for mechanical separation by equipment).

The construction procedures that will be used to cross small wetlands will be similar to those used on dry land areas. However, if the trench contains water, trench breakers will be left in the trench prior to entering the wetland. This procedure will minimize silt discharges into the wetland. If construction activities breach a permeable layer, the bottom of the trench will be sealed.

20160727-4003 FERC PDF (Unofficial) 07/27/2016

In addition, the point at which the trench enters and exits a wetland will be sealed with impervious trench breakers (clay or bentonite) to insure the wetlands hydrologic integrity. Concrete bags/sakrete shall not be used as impervious trench breakers at wetland limits. Backfill will be well compacted, especially at the edges of the wetland. Original topographic conditions will be restored after the completion of construction.

Construction in larger wetland areas may use the "push technique". Board mats will be used to provide a working surface for the movement of equipment, personnel, and materials. The trench may be excavated using a dragline or clamshell dredge. The excavated material will be stored adjacent to the trench.

The pipe will be stored and joined at staging areas located outside the wetland. As necessary, the pipe will be weighted to provide negative buoyancy and temporary floats may be attached to the pipe to provide short-term positive buoyancy. After floating the pipe into place, these floats will be cut and the pipe will settle to the bottom of the trench. This operation will be repeated, with pipe sections fabricated, pushed into place, and subsequent sections welded together until the wetland crossing is complete. The excavated material will then be placed over the pipe to backfill the trench. To maintain flow patterns within the wetland, excess soil will be removed or redistributed within the right-of-way in such a manner that the flow patterns are not impacted.
Vegetation of most wetland areas disturbed during construction should reoccur naturally and is generally favored. Emergent and shrub wetland vegetation will be allowed to become re-established; however, tree size vegetation will be controlled within the permanently maintained right-of-way.
Wetland revegetation shall be considered successful if the cover of herbaceous and/or woody species is at least 80 percent of the type, density, and distribution of the vegetation in adjacent wetland areas that were not disturbed by construction. If revegetation is not successful at the end of 3 years, develop and implement (in consultation with a professional wetland ecologist) a remedial revegetation plan to actively re-vegetate the wetland. Continue revegetation efforts until wetland revegetation is successful.

Do not conduct vegetation maintenance over the full width of the permanent right-of-way in wetlands. However, to facilitate periodic pipeline corrosion/leak surveys, a corridor centered on the pipeline and up to 10 feet wide may be maintained in an herbaceous state. In addition, trees within 15 feet of the pipeline that is greater than 15 feet in height may be selectively cut and removed from the permanent right-of-way.

Do not use herbicides or pesticides in or within 100 feet of a wetland, except as allowed by the appropriate land management agency or state agency.

Do not use rock, soil imported from outside the wetland, tree stumps, or brush to support equipment on the construction right-of-way.

If standing water or saturated soils are present, or if construction equipment causes ruts or mixing of topsoil and subsoil in wetlands, use low-ground–weight construction equipment, or operate normal equipment on timber rip rap, prefabricated equipment mats, or terra mats.

6.3 Extra Work Areas and Access Roads

Locate all extra work areas and access roads (such as staging areas and additional spoil storage areas) at least 50 feet away from all wetland boundaries, except where the adjacent upland consists of cultivated or rotated cropland or other disturbed land

The project sponsor shall file with the Secretary for review and written approval by the Director, site-specific justification for each extra work area with a less than 50 foot setback from the wetland boundaries, except where adjacent upland consists of cultivated or rotated cropland or other disturbed land. The justification must specify the site-specific conditions that will not permit a 50-foot setback and measures to ensure the wetland is adequately protected.

The construction right-of-way may be used for access when the wetland soil is firm enough to avoid rutting or the construction right-of-way has been appropriately stabilized to avoid rutting (e.g., with timber riprap, prefabricated equipment mats, or terra mats).

In wetlands that cannot be appropriately stabilized, all construction equipment other than that needed to install the wetland crossing shall use access roads located in upland areas. Where access roads in upland areas do not provide reasonable access, limit all other construction equipment to one pass through the wetland using the construction right-of-way.

The only access roads, other than the construction right-of-way, that can be used in wetlands are those existing roads that can be used with no modifications or improvements, other than routine repair, and no impact on the wetland.

6.4 Equipment Pads / Timber Mats

In wetlands with standing water the National representatives may direct that equipment pads be used to prevent unnecessary damage to the soil structure. Generally several equipment pads will be laid side by side in the construction travel area.

6.5 Clearing

- Limit construction equipment operating in wetland areas to that needed to clear the construction right-of-way, dig the trench, fabricate and install the pipeline, backfill the trench, and restore the construction right-of-way.
- Rubber tired equipment will be allowed to work in wetlands unless the equipment will not damage existing root systems and is approved by the Chief Environmental Inspector (CEI). Bulldozers will not be used to remove timber, trees, or brush. Trees and brush will be cut at ground level by tree shears, grinders, or chain saws.
- Tree stumps will be left in place, except within the trench line or unless their removal is necessary to ensure the safety of workers. Tree stumps may only be removed from outside the trench line if specifically authorized by the Chief Inspector. Leaving stumps in place will facilitate rapid vegetation of the wetland by indigenous tree species following construction. Stumps may be ground to a suitable height for safety reasons.
- All timber, brush, and grindings will be removed from the wetland.
- Debris and stumps will not be buried within wetlands but may be buried in the ROW outside of wetlands (in non-agricultural lands), where permitted.
- Trees located outside of the ROW will not be cut.

- The Environmental Inspector will photo document areas before and after clearing for use in later revegetation/restoration.
- The project sponsor can burn woody debris in wetlands, if approved by the COE and in accordance with state and local regulations, ensuring that all remaining woody debris is removed for disposal.

6.6 Grading

Extensive grading will normally be unnecessary because the topography of most wetlands is level. Grading will be limited to the areas directly over the trench line, except where topography, such as side slopes, requires additional grading for safety reasons. Where grading is required, topsoil will be segregated and returned as an even layer to all graded areas.

6.7 Trenching

- The topsoil in wetlands will be stripped from the ditch line and segregated if: it is not saturated and of sufficient depth to allow mechanical separation. Topsoil stripping (in non-saturated conditions) will be performed up to a depth of 12 inches. The segregated topsoil will be stockpiled separately from subsoil for later restoration of the ROW. Immediately after backfilling is complete, restore the segregated topsoil to it's original location.
- Spoil will be contained with straw bales, filter socks, or silt fences to prevent the spoil from flowing off of the ROW or into waterbodies.
- Minimize the length of time that topsoil is segregated and the trench is open. Do not trench the wetland until the pipeline is assembled and ready for lowering in.

6.8 Temporary Sediment Control

Install sediment barriers immediately after initial disturbance of the wetland or adjacent upland. Sediment barriers must be properly maintained throughout construction and reinstalled as necessary (such as after backfilling of the trench). Except as noted below, maintain sediment barriers until replaced by permanent erosion controls or restoration of adjacent upland areas is complete. Temporary erosion and sediment control measures are addressed in more detail in the Plan.

Install sediment barriers across the entire construction right-of-way immediately upslope of the wetland boundary at all wetland crossings where necessary to prevent sediment flow into the wetland.

Where wetlands are adjacent to the construction right-of-way and the right-of-way slopes toward the wetland, install sediment barriers along the edge of the construction right-of-way as necessary to contain spoil within the construction right-of-way and prevent sediment flow into the wetland.

Install sediment barriers along the edge of the construction right-of-way as necessary to contain spoil and sediment within the construction right-of-way through wetlands. Remove these sediment barriers during right-of-way cleanup.

6.9 Trench Dewatering

Dewater the trench (either on or off the construction right-of-way) in a manner that does not cause erosion and does not result in silt-laden water flowing into any wetland. Remove the dewatering structures as soon as practicable after the completion of dewatering activities.

6.10 Backfilling

- The trench will be backfilled with subsoil first. After the subsoil has been rough graded, topsoil will be replaced in an even layer. The topsoil contains seeds, rhizomes, and other plant propagules, which will aid rapid re-colonization by indigenous wetland species.
- Where rock (boulders, etc.) was part of the surface features prior to construction of the pipeline, rock will be placed back in the wetland in approximately the same configuration, as had been the pre-construction situation. Photos will be taken of the ROW in these situations, both before and after, in order to document the nature of the situation.

7 RESTORATION

7.1 Cleanup

- Commence cleanup operations immediately following backfill operations. Complete final grading, topsoil replacement, and installation of permanent erosion control structures within 20 days after backfilling the trench (10 days in residential areas). In agricultural lands, deep ripping of the exposed right-of-way, rock cleanup, and disposal prior to topsoil replacement and deep sub-soiling are part of the restoration process prior to grading (for details on agricultural land decompaction refer to Attachment 1). If seasonal or other weather conditions prevent compliance with these time frames, maintain temporary erosion controls (temporary slope breakers, sediment barriers, and mulch) until conditions allow completion of cleanup. If construction or restoration unexpectedly continues into the winter season when conditions could delay successful decompaction, topsoil replacement, or permanent seeding until the following spring, file with the Secretary for the review and written approval of the Director, a winter construction plan (as specified in section 3.7). this filing requirement does not apply to projects constructed under the automatic authorization provisions of the FERC's regulations.
- A travel lane may be left open temporarily to allow access by construction traffic if the temporary erosion control structures are installed and inspected and maintained. When access is no longer required the travel lane must be removed and the right-of-way restored.
- Rock excavated from the trench may be used to backfill the trench only to the top of the existing bedrock profile. Generally, in agricultural lands, rock will not be returned to the trench any higher than 24 inches below the exposed (topsoil-stripped) construction surface. However, if extensive areas of shallow bedrock (within 24 to 30 inches from native surface) are encountered, National will limit backfill of rock to a depth of not less than 30" below pre-existing grade. Rock that is not returned to the trench should be considered construction debris, unless approved for use as cover/surface stabilization or for some other use on the construction work areas by the landowner or land managing agency.

20160727-4003 FERC PDF (Unofficial) 07/27/2016

- Remove excess rock from at least the top 12 inches of soil in all cultivated or rotated cropland, managed pastures, hayfields, and residential areas, as well as other areas at the landowner's request. The size, density, and distribution of rock on the construction work area should be similar to adjacent areas not disturbed by construction. The landowner or land management agency may approve other provisions in writing.
- Grade the construction right-of-way to restore pre-construction contours and leave the soil in the proper condition for planting.
- Remove construction debris from all construction work areas unless the landowner or land management agency approves leaving materials onsite for beneficial reuse, stabilization, or habitat restoration.
- Remove temporary sediment barriers when replaced by permanent erosion control measures or when revegetation is successful.
- Contractor shall restore and re-vegetate all disturbed pipe yard areas, including lime, fertilizer, seed and mulch or restore equivalent to pre-construction conditions.

PERMANENT EROSION CONTROL DEVICES

7.2 Permanent Trench Breakers

- An Engineer or similarly qualified professional shall determine the need for and spacing of trench breakers, including agricultural fields. Otherwise, trench breakers shall be installed at intervals as per the following table and upslope of slope breakers and/or the site specific SWPPP or E&S Plan (See BMP Drawing Nos. 6A and 8A).
- Trench breakers are intended to slow the flow of subsurface water along the trench. Trench breakers may be constructed of materials such as bentonite, clay, sand bags or polyurethane foam (refer to permit or permitting agency for acceptable materials). Do not use topsoil in trench breakers.
- At a minimum, install a trench breaker at the base of slopes greater than 5 percent where the base of the slope is less than 50 feet from a waterbody or wetland and where needed to avoid draining a waterbody or wetland. Install trench breakers at wetland boundaries, as specified in the procedures. Do not install trench breakers within a wetland.

PERMANENT TRENCH BREAKER SPACING

Slope	Spacing
<5%	1000 Feet
5 - 15%	500 Feet
>15 - 25%	300 Feet
>25-35%	200 Feet
>35-100%	100 Feet
>100%	50 Feet

20160727-4003 FERC PDF (Unofficial) 07/27/2016

7.3 Permanent Slope Breakers

- Permanent slope breakers are intended to reduce runoff velocity, divert water off the construction ROW, and prevent sediment deposition into sensitive resources. Permanent slope breakers may be constructed of materials such as soil, stone, or some functional equivalent.
- Construct and maintain permanent slope breakers in all areas, except cultivated areas and lawns, unless requested by the landowner, using the spacing recommendations obtained from the local soil conservation authority or land managing agency.
- In the absence of written recommendations, use the following spacing unless closer spacing is necessary to avoid excessive erosion on the construction right-of-way: (See *BMP Drawing No.* 8A)

PENNSYLVANIA Installation		NEW YORK Installation	
Slope	**Distance**	**Slope**	**Distance**
<5%	250 Feet	<5%	125 Feet
5 - 15%	150 Feet	5 - 10%	100 Feet
>15 - 30%	100 Feet	>10 – 20%	75 Feet
>30%	50 Feet	>20 – 35%	50 Feet
		>35%	25 Feet

- Construct slope breakers to divert surface flow to a stable area without causing water to pool or erode behind the breaker. In the absence of a stable area, construct appropriate energy-dissipating devices at the end of the breaker.
- Slope breakers may extend slightly (about 4 feet) beyond the edge of the construction right-of-way to effectively drain water off the disturbed area. Where slope breakers extend beyond the edge of the construction right-of-way, they are subject to compliance with all applicable survey requirements.

7.4 Soil Compaction Mitigation

- Test topsoil and subsoil for compaction at regular intervals in agricultural and residential areas disturbed by construction activities. Conduct tests on the same soil type under similar moisture conditions in undisturbed areas to approximate preconstruction conditions. Use penetrometers or other appropriate devices to conduct tests.
- Plow severely compacted agricultural areas with a paraplow or other deep tillage implement. In areas where topsoil has been segregated, plow the subsoil before replacing the segregated topsoil.
- If subsequent construction and cleanup activities result in further compaction, conduct additional tilling.
- Perform appropriate soil compaction mitigation in severely compacted residential areas.

7.5 Permanent Restoration Measures

Permanent restoration and revegetation measures serve to control erosion and sedimentation by establishing a vegetative cover, which protects the soil, and by using structures which can divert or slow runoff and trap

20160727-4003 FERC PDF (Unofficial) 07/27/2016

sediment. The Contractor shall restore all disturbed portions of the construction ROW and supplemental work areas, as approved by Company.

- Final grading shall be completed within 10 days after the ditch is backfilled, weather and soil moisture permitting.
- All construction debris shall be removed from the ROW and the ROW shall be graded so that the soil is left in the proper condition for planting.
- Where trench compaction has not been done, the ROW shall be graded to pre-construction contours, as practical, with a small crown of soil left over the ditch to compensate for settling, but not to interfere with natural drainage. Openings shall be left in the trench-line crown to allow for lateral surface drainage, as approved by National inspectors.
- Where topsoil has been segregated, the topsoil shall be spread back along the ROW in an even layer (as further described in Attachment 1 - Soil Protection and Subsoil Decompaction Plan).
- The Environmental Inspector may direct construction of permanent slope breakers to replace temporary erosion control barriers at road, waterbody and wetland crossings, as specified/approved. In addition, in agricultural lands, construction of permanent slope breakers at these areas will be reviewed and coordinated with the Agricultural Inspector.

7.6 Wetland and Waterbody Crossing Restoration

7.6.1 Wetlands Crossings

- All project related material used to support equipment on the right-of-way, including, but not limited to: work mats, timber temporary riprap, and other construction debris shall be removed during the final grading of the right-of-way.
- Where the pipeline trench may drain a wetland, construct trench breakers at the wetland boundaries and/or seal the trench bottom as necessary to maintain the original wetland hydrology.
- Once backfilling is complete, affected areas original contours and flow regimes will be restored to maintain original wetland hydrology.
- For each wetland crossed, install a trench breaker at the base of slopes near the boundary between the wetland and adjacent upland areas. Install a permanent slope breaker across the construction right-of-way at the base of slopes greater than 5 percent where the base of the slope is less than 50 feet from the wetland, or as needed to prevent sediment transport into the wetland. In addition, install sediment barriers as outlined in the Plan. In some areas, with the approval of the Environmental Inspector, an earthen berm may be suitable as a sediment barrier adjacent to the wetland.
- Ensure that all disturbed areas successfully revegetate with wetland herbaceous and/or woody plant species.
- During final grading, wetlands (including areas within the 100-foot buffer) will be restored to original contours and the buffer areas seeded and mulched as soon after backfilling as practicable (preferably within 48 hours but not longer than one week) with the exception of the travel portion of the ROW, which will also be restored using these procedures after the travel way is no longer need.
- If necessary or required; to reduce the potential for risk for invasion or spreading of invasive species (such as purple loosestrife, phragmites, or Japanese knotweed), an elevated wash rack station will be used for equipment – see *BMP Drawing No. 44*. This wash rack equipment will be used in cases where:
    - the construction equipment exits a wetland having predominant invasive species vegetation, and
    - it enters another wetland without the invasive species within the next 1000 feet along the alignment
- The ROW will be seeded with annual rye grass or native perennial seed mix (see Revegetation section of this Plan) at a rate of 40 pounds/acre (unless standing water is present) to stabilize the area until indigenous wetland species can re-establish themselves. If the affected wetland is within an active agricultural parcel, reseeding will be performed according to landowner agreements.
- If bad weather limits the effectiveness of reseeding efforts, at the discretion of the Environmental Inspector and as allowed by all applicable permits, the ROW should be mulched (with straw only) to minimize erosion until conditions are suitable for reseeding. This temporary mulch cover should be monitored and maintained until conditions are suitable for completing restoration.
- No fertilizer, mulch, or lime shall be used in wetlands unless required in writing by the appropriate federal or state agency.
- Remove temporary sediment barriers located at the boundary between wetland and adjacent upland areas after revegetation and stabilization of adjacent upland areas are judged to be successful.

- Consult with the appropriate federal or state agencies to develop a project-specific wetland restoration plan. The restoration plan shall include measures for re-establishing herbaceous and/or woody species, controlling the invasion and spread of invasive species and noxious weeds (e.g., purple loosestrife and phragmites), and monitoring the success of the revegetation and weed control efforts. Provide this plan to the FERC staff upon request.
- During forested wetland restoration, the following measures will be undertaken to maximize or monitor success of revegetation:
    - Minimizing removal of stumps – to the extent practicable (while still allowing for safe working conditions) stumps will be left in place within the construction ROW to re-sprout following construction and restoration;
    - As indicated in the Clearing section of the plan, tree stumps may only be removed from the trench line unless specifically authorized by the Chief Inspector (stumps may be removed or ground to a suitable height for safety reasons);
    - If practicable, any stumps or root wads removed from the trench line, may be maintained within the ROW (e.g., staged and mulched during construction) to improve viability and replaced during restoration;
    - As necessary, or to supplement revegetation of forested wetlands (if stumps have been too damaged to survive), locally native tree species will be planted during the restoration or monitoring phases;
    - Locally native tree species stock or cuttings will be planted in a random pattern to promote natural distribution, although minimum species-appropriate average planting densities will be observed;
    - Following construction, ROW maintenance in wetlands will be limited to clearing of 10 feet, centered on the pipeline. In addition, trees within 15 feet of the pipeline that is greater than 15 feet in height may be selectively cut and removed from the permanent right-of-way.

7.6.2 Waterbody Crossings

- Return all waterbody banks to preconstruction contours or to a stable angle of repose as approved by the Environmental Inspector. Native rock from the construction right-of-way will be used to stabilize the banks where available. Do not use stream material for stabilization.
- Use clean gravel or native cobbles for the upper 1 foot of trench backfill in all waterbodies that contain coldwater fisheries.
- For open cut crossings, stabilize waterbody banks and install temporary sediment barriers within 24 hours of completing instream construction activities. For dry-ditch crossings, complete streambed and bank stabilization before returning flow to the waterbody channel.
- Install erosion control fabric or a functional equivalent on waterbody banks at the time of final bank recontouring. Do not use synthetic monofilament mesh/netted erosion control materials in areas designated as sensitive wildlife habitat unless the product is specifically designed to minimize harm to wildlife. Anchor erosion control fabric with staples or other appropriate devices.

- Application of riprap for bank stabilization must comply with COE, or its delegated agency, permit terms and conditions.
- Unless otherwise specified by state permit, limit the use of riprap to areas where flow conditions preclude effective vegetation stabilization techniques such as seeding and erosion control fabric.
- Install permanent slope breakers across the construction right-of-way at the base of slopes greater than 5 percent that are less than 50 feet from the waterbody, or as needed to prevent sediment transport into the waterbody, install sediment barriers as outlined in the Plan as per *BMP Drawing No.* 8 prior to seeding and mulching (as described above in Section 7.3). in some areas, with the approval of the Environmental Inspector, an earthen berm may be suitable as a sediment barrier adjacent to the waterbody.
- Seed and mulch the area immediately after pipeline installation. Revegetate disturbed riparian areas with native species of conservation grasses, legumes, and woody species, similar in density to adjacent undisturbed lands. At locations with existing (pre-construction) wooded conditions along stream banks and riparian areas, the following measures will be followed to minimize the potential for erosion and to provide for overhanging vegetation:
    - During clearing, existing stream bank vegetation will be maintained, except within the trench line– a set back of 50 feet from the stream bank will be utilized for additional temporary work space.
    - To the extent practicable (while still allowing for safe working conditions) stumps may be left in place along these riparian areas to re-sprout following construction and restoration.
    - If practicable, any stumps or root wads removed from the trench line, may be maintained within the ROW (e.g., staged and mulched during construction) to improve viability and replaced during restoration;

7.7 Residential Areas Restoration

Cleanup and restoration measures in residential areas will commence upon completion of the pipeline lowering in and backfilling. The restoration and mitigation efforts in residential areas will be completed in accordance with FERC requirements and include site-specific residential mitigation plans for residences located within 25 feet from the edge of construction right-of-way.

In residential areas topsoil replacement (i.e., importation of topsoil) is an acceptable alternative to topsoil segregation.

7.8 Agricultural Mitigation

The subsoil shall be de-compacted prior to replacement of the segregated topsoil. Decompaction activities shall be conducted only during periods of relatively low soil moisture to ensure the desired mitigation and prevent additional subsurface compaction. Specific additional details are included in Attachment 1 to this Plan - Soil Protection and Subsoil Decompaction Plan.

The project sponsor will file with the Secretary for the review and written approval of the Director, a winterization plan if construction will continue into the late autumn or winter season, or if restoration will not have been

completed on agricultural lands by October 15, when moisture or temperature conditions could delay successful restoration until the following year in agricultural lands – including subsoil decompaction, topsoil replacement, or permanent seeding.

7.8.1 Subsurface Drainage Systems

Subsurface drainage systems may include a collection of subsurface pipes, such as perforated tubing or tile, that intercepts, collects and transports excess groundwater, within the soil, from a section of land. Systems may also include older emplacements of "stone drains" installed in the late 1800s and early 1900s. Subsurface drainage systems have a number of functions depending on the location and the conditions under which the tile has been installed. Drain tile can have the following impacts:

- Improvement of the seasonal soil condition in an area by regulating the seasonal water table and ground water flow serving to maintain the parcel or area for farming or similar use;
- Providing the ability to control the amount of surface water and groundwater in an existing wet area that is used for agriculture production;
- Intercepting and removing surface runoff through the ground as opposed to allowing the flow across the surface (which would increase the potential for erosion and loss of valuable topsoil):
- Serves as an outlet for an existing system or an area that may have an increase in ground saturation related to pipeline excavation activity;
- Collects groundwater for other uses such as: spring fed, shallow wells for domestic supply; irrigation; watering ponds for livestock or similar activity.

During the pre-construction planning (see Pre-Construction Planning section of this Plan) verification should be obtained from the land department files, the landowner and/or the County Conservation or USDA-NRCS office, as to the existing tile system that will be crossed. It is important to verify that all tiles have been distinctly marked on both sides of the excavated area and right-of-way edges (outer perimeter), for later reference. If necessary, make provisions to be able to maintain the system in working order, so as to limit impacts to existing crops from the excess groundwater for the duration of the construction activities.

During construction, drain tiles shall be identified, marked and information recorded by the drainage specialist (see Agricultural Inspection section of this Plan). If damaged during construction, a qualified drain tile repair specialist will conduct repair or replacement to equivalent or better condition. Typical repairs are shown on *BMP Drawing Nos. 30, 30A, and 42*, and generally include the following:

- Tile repairs should be designed with substantial support placed beneath the replaced section of tile to prevent the sagging of the tile line when the backfill material placed back in the trench settles, as shown on the attached repair detail.
- It is important to adequately size the repairs to match the existing tile system. Inadequately sized tile can negatively affect the entire system and render it non-functional.
- Should additional tile be necessary due to evident soil saturation, verify that the existing tile system can accommodate the additional amount of flow prior to connecting into that system. If necessary, a new system

should be installed to facilitate the new lines or the existing system should be increased in size to accommodate the increase in flow amounts.

- At the time a tile is cut, the exposed ends of the drainpipe should be plugged or covered to prevent the tile from becoming clogged with dirt or rocks.
- The trenching crew or inspector shall carefully and immediately mark the location of cut or damaged tile in a prominent manner with lath, staking or flagging securely placed in the backfill or at the edge of the right-of-way.
- General tile replacement or repairs shall be performed in accordance with the requirements identified in this document including the material engineering details noted in BMP Drawing No. 30, and/or local ordinances or standards which may be higher, but not lower, in their level of requirements.
- The Drainage Specialist must approve any tile that may be proposed for reuse.
- The original gradient of the tile line shall be re-established with the replacement tile. As an alternative, the tile line can be re-routed and/or replaced, but must function as well as the original line.

8 REVEGETATION

8.1 General

- The project sponsor is responsible for ensuring successful revegetation of soils disturbed by project-related activities, except as noted as follows:
- Restore all turf, ornamental shrubs, and specialized landscaping in accordance with the landowners request, or compensate the landowner. Restoration work must be performed by personnel familiar with local horticultural and turf establishment practices.
- Restore agricultural lands based on site-specific soil data.

8.2 Revegetation Operations

In general, rough grading will occur 0-3 days after backfilling. The right-of-way will then be limed and fertilized (no fertilizer or lime shall be used in wetlands). The lime and fertilizer will then be disked or blended into the worked soil. If necessary, a rock rake will then be run or stones will be hand picked by laborers. The right-of-way will then be finished with a final grade. Then seed and mulch will be applied at specified rates.

In agricultural areas, additional procedures for restoration and revegetation will be performed in accordance with those outlined in the Soil Protection and Subsoil Decompaction Plan (Attachment 1)

8.3 Soil Additives

The respective project representative within the appropriate time frame will interview each affected farmland operator, during planning prior to construction, for data on the most recent preconstruction application of soil additives per field. If necessary within the appropriate time frame, site-referenced soil testing of all affected agricultural land along the project at appropriate intervals to determine the respective soil's pH, percent of

20160727-4003 FERC PDF (Unofficial) 07/27/2016

organic material, cation exchange capacity, and NPK (nitrogen, phosphorus, potassium) will be implemented. This information will be used to help establish the specific rate of lime and nutrients to be applied per field for: temporary seed cover applications; permanent seed mixtures; and (depending on time of restoration and other seasonal factors), row crop production the same season as restoration. Additional written data concerning soil modifiers will be obtained from the County Conservation District, or land management agencies. Based on the results of the site testing and other information, the site-specific fertilizer and soil pH modifiers will be incorporated into the top two inches of soil during or as soon as practicable after application.

8.4 Seeding Requirements

- Prepare a seedbed in disturbed areas to a depth of 3 to 4 inches using appropriate equipment to provide a firm seedbed. When hydro seeding, scarify the seedbed to facilitate lodging and germination of seed.
- Seed disturbed areas in accordance with written recommendations for seed mixes, rates, and dates obtained from the local soil conservation authority or the request of the landowner or land management agency. Seeding is not required in cultivated croplands unless requested by the landowner
- Perform seeding of permanent vegetation within the recommended seeding dates. If seeding cannot be done within those dates, use appropriate temporary erosion control measures and perform seeding of permanent vegetation at the appropriate time within the next recommended seeding season based on ROW soil workability (further described in Attachment 4 – Seeding, Fertilizing, and Lime Recommendation for Gas Pipeline Right-of-Way Restoration in Farmlands).Dormant seeding or temporary seeding of annual species may also be used, if necessary, to establish cover, as approved by the Environmental Inspector. Lawns may be seeded on a schedule established with the landowner.
- In the absence of written recommendations from the local soil conservation authorities, seed all disturbed soils within 4 working days of final grading in Pennsylvania and 7 days in New York, weather and soil conditions permitting, subject to specifications in the first three (3) bullets of this section (8.4 Seeding Requirements).
- Base seeding rates on Pure Live Seed. Use seed within 12 months of seed testing.
- Treat legume seed with an inoculant specific to the species using the manufacturer's recommended rate of inoculant appropriate for the seeding method (broadcast, drill, or hydro).
- In the absence of written recommendations from the local soil conservation authorities, landowner, or land managing agency to the contrary, a seed drill equipped with a cultipacker is preferred for seed application.
- Broadcast or hydro seeding can be used in lieu of drilling at double the recommended seeding rates. Where seed is broadcast, firm the seedbed with a cultipacker or roller after seeding. In rocky soils or where site conditions may limit the effectiveness of this equipment, other alternatives may be appropriate (e.g., use of a chain drag) to lightly cover seed after application, as approved by the Environmental Inspector.
- Seed slopes steeper than 33% immediately after final grading, weather permitting.
- For two-year project timelines, the topsoil berm will be seeded when the soil in the pile is loose and fresh. The top of the berm will be flattened to allow for lightweight broadcast seeding over the entire berm.

8.5 Temporary Mixtures - October 15 through March 31

General site preparation, lime and fertilizer application rates and temporary seed mixtures are detailed in Attachment 4 – Seeding, Fertilizing, and Lime Recommendation for Gas Pipeline Right-of-Way Restoration in Farmlands.

8.6 Permanent Mixtures - April 1 through October 14

General site preparation, lime and fertilizer application rates and permanent seed mixtures are detailed in Attachment 4 – Seeding, Fertilizing, and Lime Recommendation for Gas Pipeline Right-of-Way Restoration in Farmlands.

In agricultural lands soils will be tested prior to construction by the Agricultural Inspector to determine appropriate site-specific lime and fertilizer application rates (modifying the general rates in Attachment 4 up or down accordingly).

9 POST CONSTRUCTION ACTIVITIES AND REPORTING

9.1 Monitoring and Maintenance

- Conduct follow-up inspections of all disturbed areas, as necessary, to determine the success of revegetation and address landowners concerns. At a minimum, conduct inspections after the first and second growing seasons.
- Revegetation in non-agricultural areas shall be considered successful if upon visual survey the density and cover of non-nuisance vegetation (or crops in cultivated cropland) is similar in density and cover to adjacent undisturbed lands.
- In agricultural areas, revegetation shall be considered successful when upon visual survey, crop growth and vigor are similar to adjacent undisturbed portions of the same field, unless the easement agreement specifies otherwise. Monitoring will be performed by the Agricultural Inspector for not less than two seasons following the project's completion of initial restoration, or extended until restoration is deemed successful; to determine whether any follow up restoration activities are required. The monitoring shall include an assessment of plant populations, general appearance, and yields appropriate to the crops being monitored – as outlined in the Special Crop Productivity Monitoring Procedures Paper (February 1993), included as Attachment 3 to this document.
- In wetland areas, revegetation and restoration progress will be recorded annually for three years post construction or until restoration is deemed successful.
- Continue revegetation efforts until revegetation is successful.
- Monitor and correct problems with drainage and irrigation systems resulting from pipeline construction in agricultural areas until restoration is successful.
- Restoration shall be considered successful if the ROW surface condition, including the topsoil and the horizon of the upper subsoil is similar to adjacent undisturbed lands, construction debris is removed (unless

otherwise approved by the landowner or land managing agency), revegetation is successful, and proper drainage for agriculture, including the mitigation of right-of-way water boils and saturation, has been restored.

- Routine vegetation mowing or clearing over the full width of the permanent right-of-way in uplands shall not be done more frequently than every 3 years. However, to facilitate periodic corrosion and leak surveys, a corridor not exceeding 10 feet in width centered on the pipeline may be cleared at a frequency necessary to maintain the 10-foot corridor in a herbaceous state. In no case shall routine vegetation mowing or clearing occur during the migratory bird nesting season between April 15th and August 1st of any year unless specifically approved in writing by the responsible land management agency or the U.S. Fish and Wildlife Service.
- Efforts to control unauthorized off-road vehicle use, in cooperation with the landowner, shall continue throughout the life of the project. Maintain signs, gates, and permanent access roads as necessary.

9.1.1 Waterbody Post-Construction Maintenance

Limit routine vegetation mowing or clearing adjacent to waterbodies to allow a riparian strip at least 25 feet wide, as measured from the waterbody's mean high water mark, to permanently revegetate with native plant species across the entire construction right-of-way. However, to facilitate periodic corrosion/leak surveys, a corridor centered on the pipeline and up to 10 feet wide may be cleared at a frequency necessary to maintain the 10-foot corridor in an herbaceous state. In addition, trees that are located within 15 feet of the pipeline that have roots that could compromise the integrity of the pipeline coating may be removed from the permanent right-of-way. Do not conduct any routine vegetation mowing or clearing in riparian areas that are between HDD entry and exit points.

Do not use herbicides or pesticides in or within 100 feet of a waterbody except as allowed by the appropriate land management or state agency.

Time of year restrictions specified in the Plan (April 15 – August 1 of any year) apply to routine mowing and clearing of riparian areas.

9.1.2 Wetland Post-Construction Maintenance

Do not conduct routine vegetation mowing or clearing over the full width of the permanent right-of-way in wetlands. However, to facilitate periodic corrosion/leak surveys, a corridor centered on the pipeline and up to 10 feet wide may be cleared at a frequency necessary to maintain the 10-foot corridor in a herbaceous state. In addition, trees within 15 feet of the pipeline with roots that could compromise the integrity of pipeline coating may be selectively cut and removed from the permanent right-of-way. Do not conduct any routine vegetation mowing or clearing in wetlands that are between HDD entry and exit points.

Do not use herbicides or pesticides in or within 100 feet of a wetland, except as allowed by the appropriate federal or state agency.

Time of the year restrictions specified in the Plan (April 15 – August 1 of any year) apply to routine mowing and clearing of wetland areas.

20160727-4003 FERC PDF (Unofficial) 07/27/2016

Monitor and record the success of wetland revegetation annually until wetland revegetation is successful.

Wetland revegetation shall be considered successful if all of the following criteria are satisfied:

- The affected wetland satisfies the current federal definition for a wetland (i.e., soils, hydrology, and vegetation).
- Vegetation is at least 80 percent of either the cover documented for the wetland prior to construction, or at least 80 percent of the cover in adjacent wetland areas that were not disturbed by construction.
- If natural rather than active revegetation was used, the plant species composition is consistent with early successional wetland plant communities in the affected ecoregion.
- Invasive species and noxious weeds are absent, unless they are abundant in adjacent areas that were not disturbed by construction.

9.2 Reporting

The project sponsor shall maintain records that identify by milepost:

- Method of application, application rate, and type of fertilizer, pH modifying agent, seed, and mulch used.
- Acreage treated
- Dates of backfilling and seeding
- Names of landowners requesting special seeding treatment and a description of the follow-up actions
- The location of any subsurface drainage repairs or improvements made during restoration; and
- Any problem areas and how they were addressed

The project sponsor shall file with the Secretary quarterly activity reports documenting the results of follow-up inspections required by section 9.1; any problem areas, including those identified by the landowner; and corrective actions taken for at least 2 years following construction.

The requirement to file quarterly activity reports with the Secretary does not apply to projects constructed under the automatic authorization, prior notice, or advanced notice provisions in the FERC's regulations.

9.2.1 Wetland Reporting

Within 3 years after construction, file a report with the Secretary identifying the status of the wetland revegetation efforts and documenting success as defined in 9.1.2 above. The requirements to file wetland restoration reports with the Secretary does not apply to projects constructed under the automatic authorization, prior notice, or advanced notice provisions in the FERC's regulations.

For any wetland where revegetation is not successful at the end of 3 years after construction, develop and implement (in consultation with a professional wetland ecologist) a remedial revegetation plan to actively revegetate wetlands. Continue revegetation efforts and file a report annually documenting progress in these wetlands until wetland revegetation is successful.

20160727-4003 FERC PDF (Unofficial) 07/27/2016

9.3 Off Road Vehicle Control

To each owner or manager of forested lands, offer to install and maintain measures to control unauthorized vehicle access to the right-of-way. These measures may include:

- Signs
- Fences with locking gates
- Slash and timber barriers, pipe barriers, or a line of boulders across the ROW
- Conifers or other appropriate trees or shrubs across the ROW

10 GENERAL PIPELINE CONSTRUCTION SEQUENCING

10.1 Pre-Construction

Prior to mobilization, the Drainage Specialist/Agricultural Inspector will review drain tile systems, potential dewatering outlets, and potential outlets for interceptor systems to mitigate subsequent ROW water boils and saturation (see Pre-Construction Planning section of this Plan). In conjunction with the Environmental Inspector and the Project's construction management, the Drainage Specialist/Agricultural Inspector will review nearby or crossed ditches (see Section 4.10), for their adequacy as temporary holding areas for trench dewatering, at a minimum covering those segments of the Project's ROW through agricultural lands that are identified with high water table (HWT) soil. The staff will review the construction ROW plan, concerning agricultural lands for: a) the topsoil stockpiling locations being consistent with the upslope side of the ROW; b) the "extra work space areas" for their sufficiency of size to accommodate effective soil segregation and protection, for various special construction related activities (e.g., bore set ups and corresponding spoil areas; staging sites for waterway or road crossings, etc.); and c) location of all natural drainage swales on affected farms, where adequate surface drainage gaps (through soil berms) are to be left as openings during topsoil stripping and spoil excavation management.

Before construction begins, the R.O.W. will be surveyed and staked. Other utility lines will be located and marked to prevent accidental damage during pipeline construction.

10.2 Staging Area

Staging areas will be set up when the contractor moves in to begin work. Proper access BMPs will be implemented prior to any sustained heavy traffic. If vehicles enter or exit the staging area onto a paved road, an entrance pad will be installed as per *BMP Drawing No.1.* Strip topsoil and segregate for staging areas (if any) residential or agricultural lands.

20160727-4003 FERC PDF (Unofficial) 07/27/2016

10.3 Handling of Hazardous Materials

All fuels, oils, chemicals, or other hazardous materials will be maintained in tightly sealed containers during transportation and storage. Fuels will be stored in equipment staging areas in stationary tanks. The tanks will be diked at the time of their placement in the staging area. Refueling will be performed in accordance with Section IV.A.1 of the FERC's Wetland and Waterbody Construction and Mitigation Procedures (Procedures); this includes storage of hazardous materials and the application of concrete coating. The FERC procedure is to store fuels and perform refueling at distances no less than 100 feet from a stream or wetland. In addition to the FERC's procedures, the project will not allow the maintenance of equipment within 100 feet of streams and wetlands unless not doing so may create a greater hazard if not corrected before moving equipment (e.g., patching an oil leak from a stranded backhoe). This is also shown on *BMP Drawing Nos. 4 and 4A*, note 2.

In the event of a spill or leakage, the contents will be transferred to another tank. The empty tank will be removed as well as all standing liquids caught by the dike. All obviously contaminated soils will be removed and photo-ionization meters will be used to identify any further contaminated soils. The excavated area will be backfilled with clean soil.

10.4 Access Roads

The project will make use of the existing ROW for access along the pipeline. Where additional access is necessary, existing access roads may be used upon agreement with the landowner. Expansion of existing access roads or creation of new access roads is subject to routine construction requirements (e.g., topsoil stripping in residential or agricultural areas). BMPs will be installed and maintained on these roads, and they will be reclaimed to a condition at least equal to their pre-construction condition unless otherwise agreed to with a landowner.

10.5 Clearing

This consists of the removal of trees and other obstructions from the ROW Clearing will be restricted to only that portion of the ROW necessary for actual construction. Trees, brush, and other obstructions will be cleared to permit safe and efficient use of machinery and other construction equipment. Permission will be obtained from landowners for use of access roads across their property to the ROW, for cutting trees and erecting temporary gates where necessary.

Various clearing methods will be employed, depending on tree size, contours of the land, and the ability of the ground to support clearing equipment. Marketable timber will be cut to specified lengths and stacked. All brush may be disposed of in one of several ways, depending on local restrictions and the terms of applicable permits and/or easement agreements: piled on the edge of the R.O.W. to provide cover for wildlife, burned, or chipped. Chipped wood may be removed from or scattered along the edge of the ROW. After the removal of ROW vegetation temporary ECDs will be installed as necessary to prevent erosion.

20160727-4003 FERC PDF (Unofficial) 07/27/2016

10.6 Grading

Rock outcrops, ridges, boulders, and tree stumps will be removed from the working area, and sharp topographical irregularities will be graded to ensure rapid and safe passage of the work crews. Backhoes and bulldozers will be employed for removal of tree stumps, rocks, and boulders. Burying them or setting them outside the construction area will serve to dispose of tree stumps in an approved manner, typically. No tree stumps will be buried or placed in agricultural lands. In agricultural lands as identified in Section 4.3.1 Topsoil Segregation, topsoil will be carefully stripped from the full work area (spoil stockpiling zone, trench area, pipe stringing/welding, and traffic areas) segregated from the subsoil, and preserved for later restoration of the ROW. Leveling the ROW may entail rock blasting in certain areas. Qualified, experienced personnel will conduct blasting operations. Licensed blasting experts will be employed, and blasting permits will be obtained when required by government authorities. Disposal of excess rock will be in accordance with the terms of any applicable permit and/or easement agreements.

10.7 Rock Entrances

The Grading Crew will install rock entrances at public roads in accordance with BMP Drawing No. 1, Entrance Pad. If the job kicks off at a point where an entrance pad is required, the entrance pad will be installed as soon as the immediate area required for the pad is stumped and rock can be brought in. This shall be within forty-eight (48) hours from the time the Grading Crew move onto the location.

For other locations along the pipeline where entrance pads are required, the pads will be installed as the Grading Crew progresses to these locations, but no later than forty-eight (48) hours from the time they reach these locations.

10.8 Temporary Diversions

Diversion ditches will be installed by the Grading Crew each time the crew progresses to a location where an additional diversion ditch is required according to this Plan. Example information on diversion ditches and controls are included on *BMP Drawing Nos. 11, 14, 17 and 25*. The Rough Grading Crew (at the leading edge of the grading process) will install rough diversions each day for that section of the ROW, which has been rough graded. The Finish Grade Crew (at the trailing edge of the grading process) will finalize the construction of the temporary diversion ditches. After that, each succeeding crew will be responsible for maintaining the diversion ditches on a daily basis.

10.9 Ditching

The ditch centerline will be staked following completion of grading. The ditch will be excavated by mechanical backhoe to a depth that provides at least three (3) feet of cover on top of the pipe, except in bedrock areas, where a minimum cover of two (2) feet will be provided. In agricultural lands a minimum of (4) feet of cover will be maintained. In areas where temporary filling has been utilized, the depth will be measured from the original ground surface. During construction, excavated material is typically stored along one side of the trench while the other side is used as a work area.

The method of excavation used will depend on the specific soil conditions encountered, however, it is expected that track excavators will be required. Ditch-line breakers, usually composed of sandbags or staked straw bales, will be installed on steep slopes. Where bedrock is encountered, attempt to rip the ditch with a backhoe. Only if this technique proves unsuccessful will blasting be used.

Landowners will be contacted sufficiently in advance of construction, regarding access ways across the trench. The owner, as well as the operator (if different from the owner), of affected agricultural land will be met with by one of the respective project representative to designate farming related access ways across the trench. Where requested by either by landowners or farmland operators, access ways across the trench will be spaced at convenient intervals to allow landowners and land operators, all sizes of farming equipment requiring access, domestic livestock, and wildlife to cross the construction area.

Drainage Specialists in coordination with National land agents will contact landowners to locate drainage systems installed along the pipeline. If drainage tile is present, excavation of the trench will be to a depth sufficient to meet drainage tile clearance requirements. Damaged drain tiles will be promptly repaired or replaced (see Restoration section of this Plan).

10.10 Lowering In

Prior to lowering in, the ditch will be cleaned of all debris; the bottom smoothed and sand bags placed at a spacing of 15 feet or less, along the ditch bottom. The pipe string will be lifted from the skid supports and lowered directly into the ditch by using a sufficient number of sideboom tractors equipped with rubber-tired cradles and/or slings and belts to prevent damage to the pipe and pipe coating.
In areas where the ditch bottom is irregularly shaped due to consolidated rock and/or where the excavated spoil materials are unacceptable for backfilling around the pipe, padding materials may be required. Sand or screened subsoil material from the ditch excavation, or a combination of each, will be used for padding. This padding material will be placed on the bottom of the ditch, at a depth of six (6) inches, just prior to lowering in the pipe.

10.11 Backfilling

Before backfilling begins, a final inspection will be made to assure that all debris has been removed from the ditch and that the pipe and pipe coating are undamaged.

Where rock, gravel, or other materials are encountered of a size and shape that could cause damage to the pipe or pipe coating, select padding material will be placed around the pipe to a thickness of six (6) inches, or rock shield will be applied.

While the ditch is open the Drainage Specialist will supervise the repair or replacement of drain lines. During backfilling, the Drainage Specialist or Agricultural Inspector (in conjunction with backfill inspector) will supervise the application of the necessary measures to ensure protection from damage and permanent drain line support for gravity flow. Prior to backfilling the trench, any drain tiles across the working side of the ROW will be inspected to ensure its integrity. Tiles crushed or otherwise damaged by construction activity will be repaired or replaced to pre-construction or better condition.

In the event dewatering is required for pipe installation and backfilling additional efforts described in Section 4.10 will be employed.

On steep slopes, trench breakers consisting of sandbags, gravel, cement, or cement-filled sacks will be installed in the trench over and around the pipe to provide full protection against wash-away in areas that are vulnerable. Compacted earth or other suitable low-permeability material will be used on gentler slopes and wet areas to minimize channeling of groundwater along the ditch line.

The ditch will be backfilled using either subsoil excavated from the pipeline ditch or fill from a remote source. Multiple passes of heavy equipment will be used to compact the fill material.

Restoration and cleanup activities will occur following the pipe installation and backfill as described in Section 7.

10.12 Hydrostatic Testing

Before any segment of new pipeline is placed in-service, it will be hydrostatically tested to ensure it conforms to ESP SC and D.O.T. specifications. Test water will be withdrawn from nearby hydrants, ponds, streams, or trucked in from an off-site location. This water will be pumped into the pipeline behind a fill pig. A high-pressure pump will be used to pressurize the pipeline to designed test pressure. The test pressure will be maintained for eight (8) hours. After test, the pipe section is depressurized and test water is discharged to an approved location where it is released back into the environment (in accordance with the project Hydrostatic Test Plan). (Reference *BMP Drawing No. 3*.)

10.12.1 Notification Procedures and Permits

Apply for state-issued water withdrawal permits, as required.
Apply for National Pollutant Discharge Elimination System (NPDES) or state-issued discharge permits, as required.

Notify appropriate state agencies of intent to use specific sources at least 48 hours before testing activities unless they waive this requirement in writing.

10.12.2 General

Perform 100 percent radiographic inspection of all pipeline section welds or hydrotest the pipline sections, before installation under waterbodies or wetlands.

If pumps used for hydrostatic testing are within 100 feet of any waterbody or wetland, address secondary containment and refueling of these pumps in the project's Spill Prevention and Response Procedures.

The project sponsor shall file with the Secretary before construction a list identifying the location of all waterbodies proposed for use as a hydrostatic test water or discharge location. This filing requirement does not apply to projects constructed under the automatic authorization provisions of FERC's regulations.

20160727-4003 FERC PDF (Unofficial) 07/27/2016

10.12.3 Intake source and Rate

Screen the intake hose to minimize the potential for entrainment of fish.

Do not use state-designated exceptional value waters, waterbodies which provide habitat for federally listed threatened or endangered species, or waterbodies designated as public water supplies, unless appropriate federal, state, and/or local permitting agencies grant written permission.

Maintain adequate flow rates to protect aquatic life, provide for all waterbody uses, and provide for downstream withdrawals of water by existing users

Locate hydrostatic test manifolds outside wetlands and riparian areas to the maximum extent practicable

10.12.4 Discharge Location, Method, and Rate

Regulate discharge rate, use energy dissipation device(s), and install sediment barriers, as necessary, to prevent erosion, streambed scour, suspension of sediments, or excessive streamflow.

Do not discharge into state-designated exceptional value waters, waterbodies which provide habitat for federally listed threatened or endangered species, or waterbodies designated as public water supplies, unless appropriate federal, state, and local permitting agencies grant written permission.

10.13 Restoration and Revegetation

Final grading, topsoil replacement, and installation of permanent erosion control structures will be completed within 20 days after backfilling the trench (10 days in residential areas). If soil moisture, seasonal or other weather conditions prevent compliance with these time frames, temporary erosion controls (temporary slope breakers and sediment barriers) will be maintained until conditions allow completion of cleanup.

The pipeline ROW will be carefully cleaned up and restored following construction. When the backfilling is completed, excess rock and similar materials will be removed from the ROW along with accumulated construction debris, and the ROW will be re-graded.

Topsoil will be re-spread over the ROW in areas where it had been segregated prior to ditching. Drainage ditches, terraces, roads, and fences will be restored to their former condition. Permanent slope breakers will be installed to divert runoff away from disturbed areas. Agricultural lands will be restored to equal or better condition (see the Restoration section and attached Soil Protection and Subsoil Decompaction Plan).

Construction equipment, surplus materials, and debris will be removed from the ROW. Pipeline markers and warning signs will be erected at roads and interspersed at points along the ROW. The ROW will be re-seeded, fertilized, and mulched unless the landowner stipulates otherwise. Revegetation will be monitored periodically. If excessive erosion occurs, these areas will be stabilized and revegetated.

20160727-4003 FERC PDF (Unofficial) 07/27/2016

11 REFERENCES

- Federal Energy Regulatory Commission. Upland Erosion Control, Revegetation, and Maintenance Plan, January 2003.
- Federal Energy Regulatory Commission. Wetland and Waterbody Construction and Mitigation Procedures, January 2003.
- New York State Department of Agriculture & Markets. Pipeline Construction Projects- Agricultural Mitigation through Stages of Project Planning, Construction/Restoration and Follow-Up Monitoring, November 1997.
- New York State Department of Agriculture & Markets – Special Crop Productivity Monitoring Procedures, February 1993.
- New York State Department of Agriculture & Markets – New York State Farmlands Seeding, Fertilizer, and Lime Recommendations for Gas Pipeline Right-of-Way Restoration in Farmlands, undated.
- Pennsylvania Department of Environmental Protection. ESCGP-2 permit for Stormwater Discharges from Construction Activity.
- New York State Department of Environmental Conservation SPDES General Permit for Stormwater Discharges from Construction Activities (GP-0-10-001).

20160727-4003 FERC PDF (Unofficial) 07/27/2016

Attachment 1

Soil Protection and Subsoil Decompaction Plan

20160727-4003 FERC PDF (Unofficial) 07/27/2016

SOIL PROTECTION
and
SUBSOIL DECOMPACTION MITIGATION PLAN

May 2006
Reviewed October 2013

OVERVIEW OF PROCEDURES

Successful soil protection and subsoil decompaction includes procedures generally associated with the following steps, with the detailed technical process outlined in the following Detailed Procedures Section:

Agency Coordination

During project planning, construction, restoration and monitoring, agency coordination will be conducted at levels appropriate to meet the objectives in this Plan, including:

1. Coordinate with the appropriate agencies regarding:
   - Drain Tile and Irrigation Systems
   - Grazing Deferment
   - Soils
   - Agricultural Biological Security
2. Obtain written recommendations from the County Conservation District regarding erosion control and revegetation specifications, both temporary and permanent. Have available all written recommendations from these or other agencies for erosion control and revegetation specifications at the project location.
3. The project sponsor agrees to consult with the appropriate agencies regarding agricultural bio-security (noxious weeds and soil-borne pathogens). If necessary, based on this consultation, Empire will develop specific practical cost-effective procedures to mitigate significant agricultural bio-security risks, if they are determined to exist in the project area.

Topsoil Segregation

1. Use topsoil segregation (or topsoil replacement) methods in residential areas, and topsoil segregation when the construction right-of-way is wider than 30 feet in agricultural lands (as defined by the Detailed Procedures in the following section):
   - Annually cultivated or rotated agricultural lands or developed improved pasture lands
   - Hayfields
   - Land enrolled in USDA Conservation Reserve Program and maintained for return to tillable use, and other areas at the landowners request
2. Prevent the mixing of topsoil with subsoil in agricultural lands by stripping all topsoil from the full work area.
3. In deep agricultural soils strip topsoil in accordance with detailed procedures outlined in the following section.
4. At stream crossings, segregate topsoil from pipe trench on stream banks to facilitate re-stabilization.

Drain Tiles

All drainage tiles encountered shall be marked, maintained during construction, and restored or replaced to as good or better condition upon completion of construction. Tiles shall be referenced and flagged with stakes located adjacent to the ditch and the temporary construction right-of-way edges (outer perimeter).

Additional details regarding drain tile maintenance, repair and/or replacement are provided in Section 4.3.2 and along with the associated BMP drawings.

Soil Compaction Mitigation

Subsoil compaction of all agricultural lands shall be relieved in two phases. First the subsoil shall be deep ripped (at times of appropriately low soil moisture) with uplifted stone removal (using standard rock-picking equipment) occurring prior or replacement of the segregated topsoil. Following topsoil replacement a second phase of decompaction will occur, that includes Paratill® deep sub-soiling, and supplemental excess stone removal, of the right-of-way (including the topsoil storage area).

DETAILED PROCEDURES

Topsoil Segregation

1.0 Use topsoil segregation methods in all the following areas:
- Annually cultivated or rotated agricultural lands.
- Hayfields, improved pastures[1], and rotation hay land/pastures.
- Other areas at the landowners' request

2.0 Prevent the mixing of topsoil with subsoil by stripping topsoil from the full work area and limit all excavating, spoil stockpiling, and traffic/equipment to the area cleared of topsoil.
- Note: Less than full available width of construction right-of-way may be used, provided that the topsoil and subsoil are segregated and all traffic/equipment and subsoil storage are limited to the area cleared of topsoil.

3.0 Stockpile both the spoil and topsoil in a manner that prevents pooling of water behind the soil piles (prevents excessive saturation of the soil), e.g.: cut a surface drainage gap through the segregated soil piles (lineal berms), and across the right-of-way, at swale crossings, and protect outlet points.

4.0 In deep agricultural soils (more than 12 inches of topsoil), segregate the topsoil to a minimum depth of at least 12-inches. In soils with less than 12 inches of topsoil the entire topsoil layer and 1-2 inches of friable subsoil (as approved by the Agricultural Inspector) will be segregated.

5.0 At stream crossings, only segregate topsoil from pipe trench on stream banks to facilitate re-stabilization. Don't disturb the remainder of the actual bank. Agricultural topsoil stripping shall proceed out to the field's fringe, near, but not beyond the edge of the stream's riparian strip.

Soil Compaction Mitigation: Two Phases

[1] Improved pastures: land of generally tillable quality, used predominantly for grazing but largely open (free of trees, brush, and boulders).

1.0 First phase, deep-ripping the exposed subsoil. In all agricultural sections of the right-of-way where topsoil is stripped, the Contractor shall deep rip the exposed, construction surface subsoil with deep tillage devices such as a heavy duty ripping chisel or ripping chisel-plow, e.g.: V-frame or straight-frame ripper; or a heavy duty Paratill®.

The subsoil shall be thoroughly deep-ripped and rock picked prior to the replacement of segregated topsoil. The subsoil shall be deep-ripped to a depth of 18 to 22 inches as determined by the Agricultural Inspector. At least 40 hp of pull should be available per leg of implement, e.g.: 4 legs / 160 hp tractor.

Note: Due to the spacing between ripping legs (about 24 to 30 inches) a series of staggered, overlapping, "parallel rips" is employed to help ensure thorough breakup of the compacted mass of subsoil material. "Kittering" or a broad "S" series of cross rips will immediately follow for sites where the former "parallel" technique is inadequate for breakup of larger chunks into smaller clods.

1.1. All stones greater than 4 inches in dimension, which are brought to the surface during the de-compaction process, shall be removed, during alternating passes of the deep ripper, rock rake, wind rower, and mechanical rock picker.

1.2. Upon approval by the Agricultural Inspector of the subsoil deep ripping and the stone removal, the topsoil that has been temporarily removed for the period of construction shall then be uniformly replaced, preferably using a light to moderate weight, LGP (low ground pressure), wide-track bulldozer.

1.3. All of the first phase deep-ripping and rock picking activities, as well as topsoil replacement and second phase de-compaction activities shall be conducted only during periods of relatively low soil moisture (i.e., not in a state of plastic consistency), as verified by the Atterberg field test, to ensure the desired mitigation and prevent additional soil profile compaction. Further technical details are provided in the Soil Moisture (Workability) section below.

1.4. Once the deep-ripping phase begins, further use of the right-of-way for any traffic is prohibited.

2.0 Second phase: Following topsoil replacement - Paratill® the right-of-way preferably with a deep angled-leg sub-soiler so the soil profile will be loosened to a depth of 20 to 22 inches achieving the necessary shattering of the subsoil and remove any large size uplifted rocks.

2.1. Deep soil profile shattering (by Paratill® or other approved deep tillage implement) includes the entire width of the temporary construction right-of-way: all areas that where the topsoil was stripped and replaced plus the area where the topsoil berm had been stored.

2.2. Deep soil profile shattering tools with angled legs include the 3 to 5 leg Paratill ®.

2.3. Alternative deep sub-soiling tools include such implements as but not limited to the straight leg Unverferth Zone Builder ® with 5 legs and (for narrower right-of-ways or limited hp tractors) 3 leg parabolic shanks, heavy duty sub-soiler (either straight frame or V-frame). Manufacturers' such as but not limited to John Deere ® and Brillion ®.

2.4. As noted for deep ripping (above) at least 40 hp of pull should be available per leg of implement for full depth effectiveness in right-of-way conditions.

2.5. If subsequent construction and cleanup activities result in further compaction, conduct additional deep sub-soiling of the agricultural soil profile, as needed.

3.0 After the completion of deep, soil profile shattering the right-of-way is lightly to moderately disked and then limed, fertilized and seeded during friable (workable) soil moisture conditions to minimize re-compaction.

Trench Crowning and Mitigation of Trench Settling

Prior to trench crowning and during the trench backfilling, ripped or blasted bedrock or concentrated volumes of excavated stone or rock material (excavated from the trench) may be used to backfill the trench only to the top of the existing bedrock profile. Generally, in agricultural lands, rock will not be returned to the trench any higher than 24 inches below the exposed (topsoil-stripped) construction surface.

All excess rock not utilized, as trench backfill, will be hauled away. The remaining backfill materials will consist of suitable subsoil over the rock fill material.

1.0 Rough trench crowning will occur during the backfill operation of the construction phase, using subsoil materials over the trench to allow, and compensate, for trench settling to the extent possible prior to restoration. Right-of-way crowning is the placement of a small berm or crown using two distinct layers of soil materials over the trench line in agricultural areas. Installing a berm or crown along the trench line compensates for the settling of backfilled soils following pipeline restoration. Typically, when backfilling, air pockets or voids will remain below grade. Eventually, the below grade soils will move into the voids and creates depressions at the surface. The crown material will compensate for this settling and can be used to fill in the area that would have otherwise been a depression. *BMP No. Drawing No. 38* shows typifies the procedure.

Note: If construction backfilling occurs between early autumn through winter Agricultural restoration will not be initiated until relatively drier soil conditions in late spring or early summer. Nearly all the trench settling will have occurred by mid-spring, giving the opportunity to compensate for trench settling using surplus, on site subsoil material immediately before restoration

Note: The stockpiled topsoil (with the proper low moisture content) will be uniformly spread over the stripped portion of the affected right-of-way, after the initial deep ripping of the exposed subsoil and the rock cleanup has been completed, in late spring or early summer.

2.0 In areas where trench settling occurs after topsoil spreading, imported topsoil will be used to fill each depression. Attempts will be made to identify sources of topsoil free of weeds, including soliciting input from landowners of potential sources.

3.0 Topsoil from the right-of-way or from adjacent agricultural land will not be used to backfill depressions.

Soil Moisture (Workability) during Restoration, Compaction Testing during Monitoring and Remedial Action

1.0 Soil Moisture – During restoration activities check the soils for not exceeding friable (workable) moisture content using the following procedures (Atterberg field test for plastic soil consistency):

1.1 Exposed construction surface subsoil

1.1.1 Take a sample with a soil auger at a depth of 16 inches.

1.1.2 Roll the soil in your hand (Worm Method), to the diameter of an earthworm (1/8" diameter), and if the soil remains intact, in increments beyond 3/8" long, the soil is too

wet (or "plastic"). If it breaks (crumbles) apart into 3/8" or shorter sections, the moisture content is correct (workable for deep ripping).

1.2 Topsoil stockpile (berm)

1.2.1 Take samples from vicinity of the berms' lower outside and inside slopes, 9 inches deep, and from the berms' inner core (at least 24 inches inside of the berm).

1.2.2 Administer the same test for each individual sample of topsoil material, as above in 1.1.2 (worm method). If all samples test friable (workable) topsoil replacement may proceed as long as favorable soil conditions remain.

1.2.3 If the topsoil is too wet, break open the topsoil stockpile (berm) and rough spread the soil partially across the right-of-way, allow it to air dry, and then conduct re-tests, until friable (usually about 2 days minimum of clear, dry weather) and then complete the topsoil replacement.

2.0 <u>Compaction Testing during the Post Restoration Monitoring and Maintenance</u> - Once the moisture of the restored, full soil profile on the affected right-of-way is at or near equilibrium with the adjacent off right-of-way land, soil profile compaction testing will be conducted by the Agricultural Inspector using an appropriate soil penetrometer or other soil compaction-measuring device (in the early spring following the year of initial restoration).

2.1 Cone-type soil penetrometer, using the 3/4 inch diameter cone, or similar cone-type soil compaction measuring tool, capable of withstanding applications of at least 400 pounds-per-square-inch (psi). When the readings inside the right-of-way are less than, equal with, or no more than twenty percent greater than the subsoil density readings outside the right-of-way, the subsoil de-compaction/shattering restoration is satisfactory.

2.2 Test for soil compaction, obtaining readings at every 3-inch vertical interval from surface to 21 inches, or to the point of resistance (300 psi), through the topsoil and subsoil, across the project right-of-way in agricultural areas. These cross section tests shall be conducted at right-of-way inter-spacing (not to exceed 200 feet) sufficient to determine the need for remedial measures.

2.3 Tests shall be done on the same soil type under the similar moisture conditions and should include the following areas

2.3.1 Temporary stockpile areas

2.3.2 The trenched zone

2.3.3 Soil from undisturbed areas

2.3.4 The work area

2.3.5 Any traffic areas related to the project

2.4 It is standard to test each sampling site of a multi-site cross section at five to eight separate points of measurement of the soil profile's density, all taken in roughly the area of a thirty-inch diameter circle. The single highest and single lowest mechanical samples of the complete soil profile, per test site, are "thrown out". The remainder of the complete test samples recorded in 3-inch increments is used to calculate the soil profile's average density per 3-inch increment.

2.5 The soil profile compaction test results within the right-of-way will be compared with those of the adjacent off right-of-way portion of the affected farm field/soil unit.

2.6 If the "higher-than-threshold" measurements occur (for instance) in one out of six representative cross-sections of one long field and no similar excesses are measured in its neighboring croplands along the right-of-way, this should be viewed as an "isolated anomaly" and the soil restoration work on the subject field is generally considered adequate.

3.0 Where representative subsoil density on the right-of-way, or a repetitive zone within the right-of-way, exceeds the representative subsoil density outside the right-of-way, follow-up shattering of the soil profile will be performed using a deep, angled-leg subsoil tool in the respective areas of the right-of-way.

4.0 Follow-up deep shattering will be applied during periods of relatively low soil moisture to ensure the desired mitigation and to prevent additional subsoil compaction. (Refer to Soil Moisture section 1.0, above)

5.0 Oversized stone/rock material, which is uplifted to the surface as a result of the deep shattering, will be removed.

General Monitoring and Remediation

1.0 General right-of-way conditions to be monitored include topsoil thickness, relative soil density (compaction), relative content of rock and large stones, trench settling, crop development, drainage and repair of severed fences, etc, for not less than two years following the project's completion.

Topsoil deficiency and trench settling shall be mitigated with imported topsoil that is consistent with the quality of topsoil on the affected site. Crop development/production problems maybe the result of right-of-way trench saturation or residual compaction, in which case appropriate interceptor drainage and/or de-compaction mitigation will be implemented. Results will be compared to portions of the same field located outside of the right-of-way.

20160727-4003 FERC PDF (Unofficial) 07/27/2016

Attachment 2

Best Management Practices (BMP) Drawings

BMP Drawing Index

BMP Description	BMP Drawing #
Entrance Pad	1
Stream Crossing - Dam & Pump	2
Pipe Test Energy Dissipater	3
Wetland Crossing	4
Wetland Travel Area	4A
Filter Fence	5
Trench Breaker	6A
Stream Bank Stabilization	7
Slope Breakers	8A
Stream Mat	9
Stream Mat at Undefined Channel	9A
Road Crossing (Open Cut)	10
Diversion Ditch	11
Road Crossing (Bore)	12
Flume (Dry Ditch) Steam	13
Run Off Ditch	14
Erosion Blankets Channel Installation	15
Specs. Erosion Blankets Channel Installation	15A
Not Applicable	16
Rock Channel Filter	17
Road Culvert Extension Across Pipeline Trench	18
Temporary Culvert with Clean Rock Fill	19
Temporary Culvert Across Open Trench	20
Dam and Pump – Stream Crossing	21
Straw Bale Installation	22
Topsoil Segregation	23
Topsoil Segregation	23A
Topsoil Segregation	23B
Erosion Blankets Slope Installation	24
Specs. Erosion Blankets Slope Installations	24A
Catch Basin Sediment Sack	25
Cathodic Protection Anode Installation	26
Storm Water Channel	27
Dewatering Filter Bag	28
Road Culvert	29
Typical Drain Tile Repair Across Trench	30
Typical Drain Tile Repair Across Trench	30A
Energy Dispatcher	31
Wooden Mat Bridge Pipeline Crossing	32
Bell Hole Next to Waterbody	33
Bell Hole Next to Wetland	34
Bell Hole Agricultural Field	35
Bell Hole Adjacent to Paved Road	36
Extra Work Spaces	37
Right-of-Way Crowning	38
Discharge Method for Trench Dewatering	39
Parallel/ New Submain Tile Installation	40
Lateral Intercept Drain	41
Typical Drain Tile Outlet	42
Temporary Wooden Mat Pipeline Crossing	43
Elevated Washrack	44
Compost Filter Sock	45A
Compost Filter Sock	45B
Compost Filter Sock	45C
Stone Pipeline Crossing with Timber Matting	46

20160727-4003 FERC PDF (Unofficial) 07/27/2016

Trench Dewatering Sediment Corral 47
Hydrotest Water Discharge Device 48
Concrete Slab Pipe Protection Detail. 49
Diversion Terrace Protection and Mat. 50
Sediment Filter Sock 51

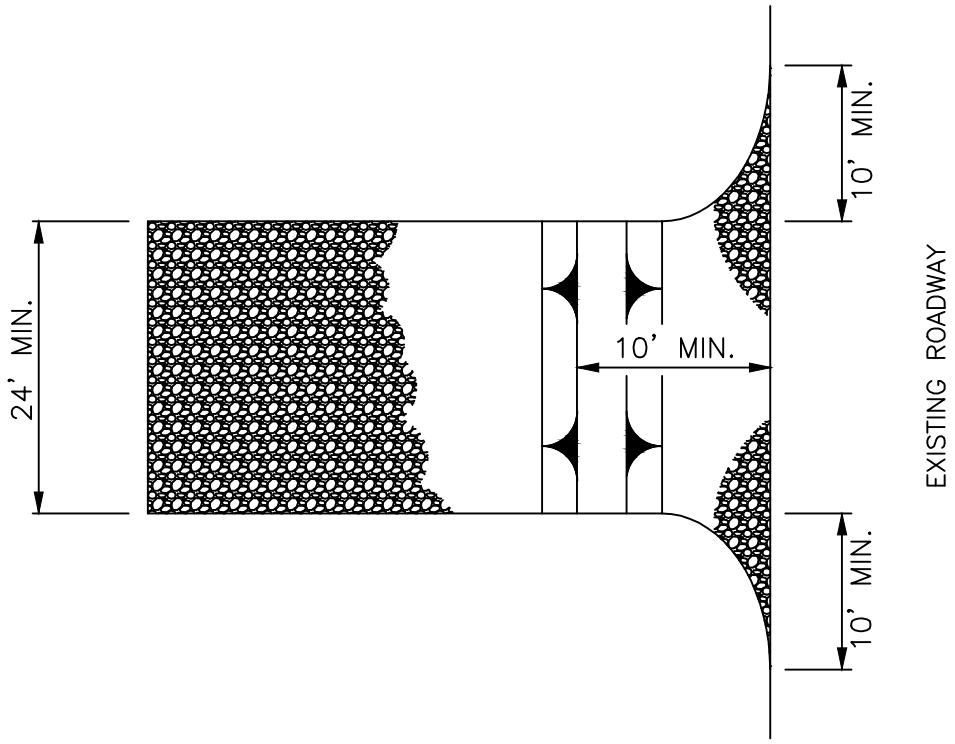

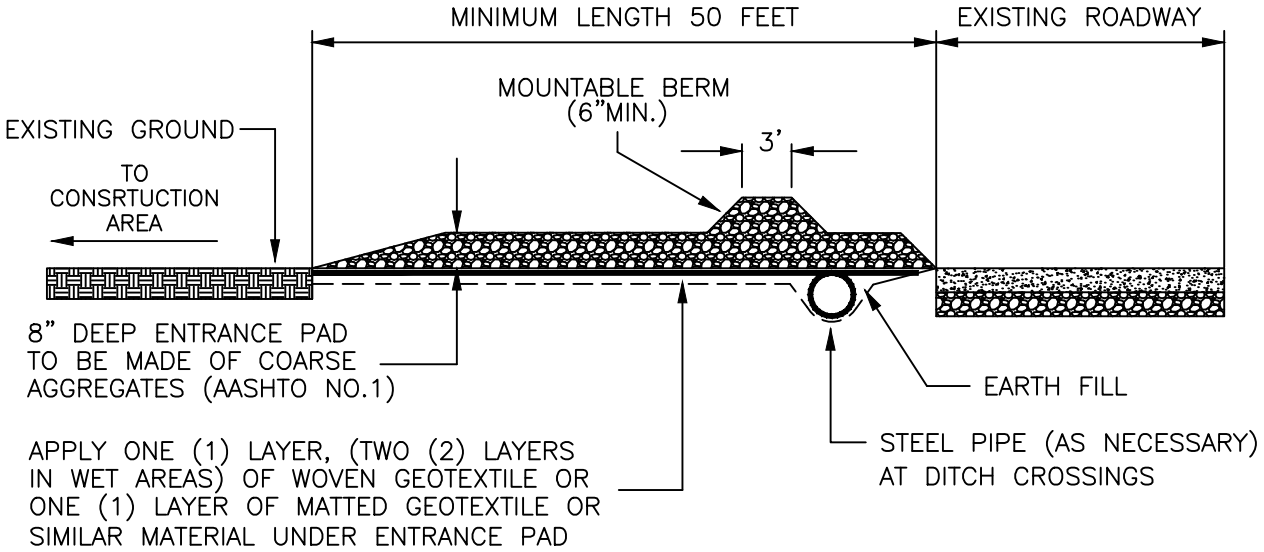

MOUNTABLE BERMS SHOULD BE INSTALLED WHEREVER OPTIONAL CULVERT PIPE IS USED. PIPE TO BE SIZED APPROPRIATELY FOR SIZE OF DITCH BEING CROSSED.

MAINTENANCE:

ROCK CONSTRUCTION ENTRANCE THICKNESS SHALL BE CONSTANTLY MAINTAINED TO THE SPECIFIED DIMENSIONS BY ADDING ROCK. A STOCKPILE SHALL BE MAINTAINED ON THE SITE FOR THIS PURPOSE. ALL SEDIMENT DEPOSITED ON PAVED ROADWAYS SHALL BE REMOVED AND RETURNED TO THE CONSTRUCTION SITE IMMEDIATELY. IF EXCESSIVE AMOUNTS OF SEDIMENT ARE BEING DEPSOSITED ON ROADWAY, EXTEND LENGTH OF ROCK CONSTRUCTION BY 50 FEET INCREMENTS UNTIL CONDITION IS ALLEVIATED OR INSTALL WASH RACK. WASHING THE ROADWAY OR SWEEPING THE DEPOSITS INTO ROADWAY DITCHES, SEWER, CULVERTS, OR OTHER DRAINSGEWAYS IS NOT ACCEPTABLE.

national Fuel SUPPLY CORPORATION	ENGINEERING DEPT. 1100 STATE STREET P.O. BOX 2081 ERIE, PA. 16512 (814) 871-8676	DRAWN BY: L. A. PHILLIPS FILENAME: NFGSC\BMP01.dwg DATE: 12/09/2013	ENTRANCE PAD	DRAWING NUMBER: 1

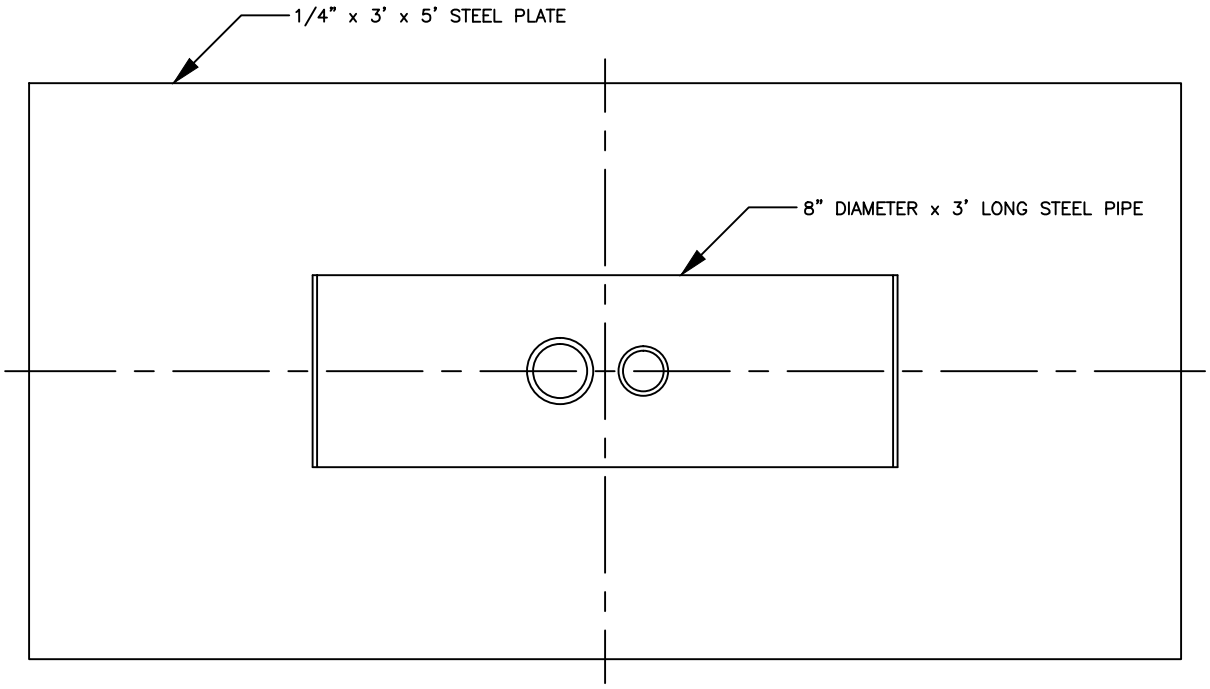

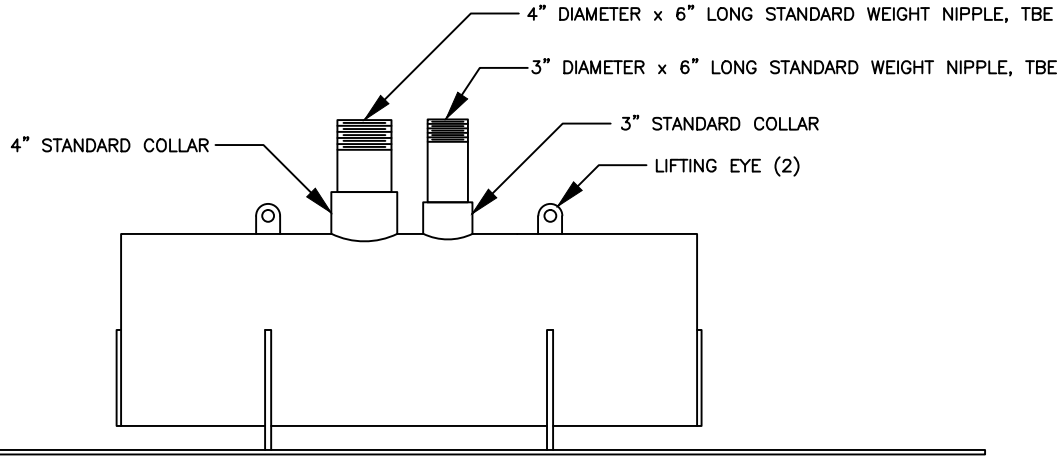

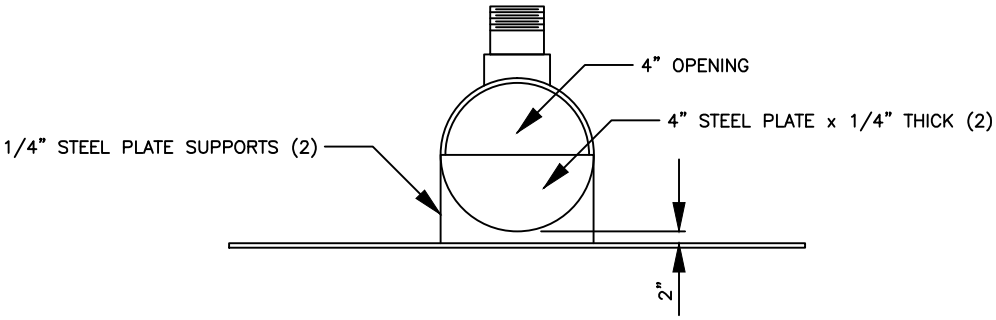

national Fuel SUPPLY CORPORATION	ENGINEERING DEPT. 1100 STATE STREET P.O. BOX 2081 ERIE, PA. 16512 (814) 871-8676	DRAWN BY: L.A.P./P.A.B. FILENAME: NFGSC\BMP02.dwg DATE: 05/16/2002	STREAM CROSSING - DAM & PUMP ENERGY DISSIPATER	DRAWING NUMBER: 2

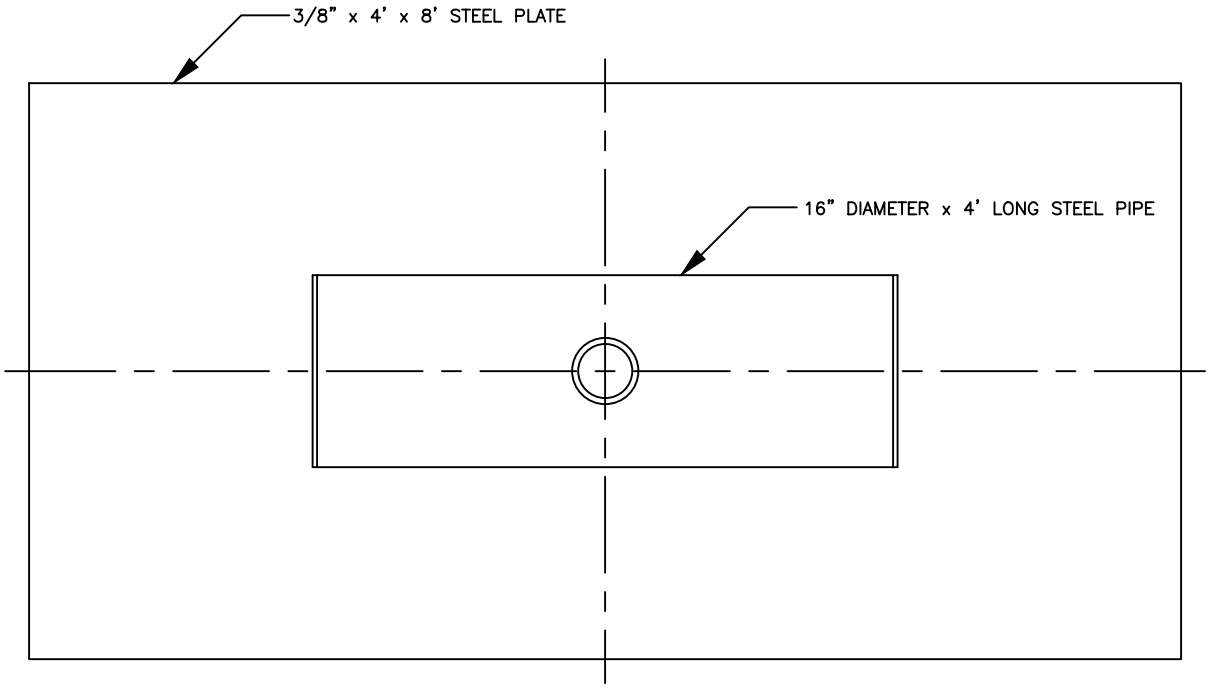

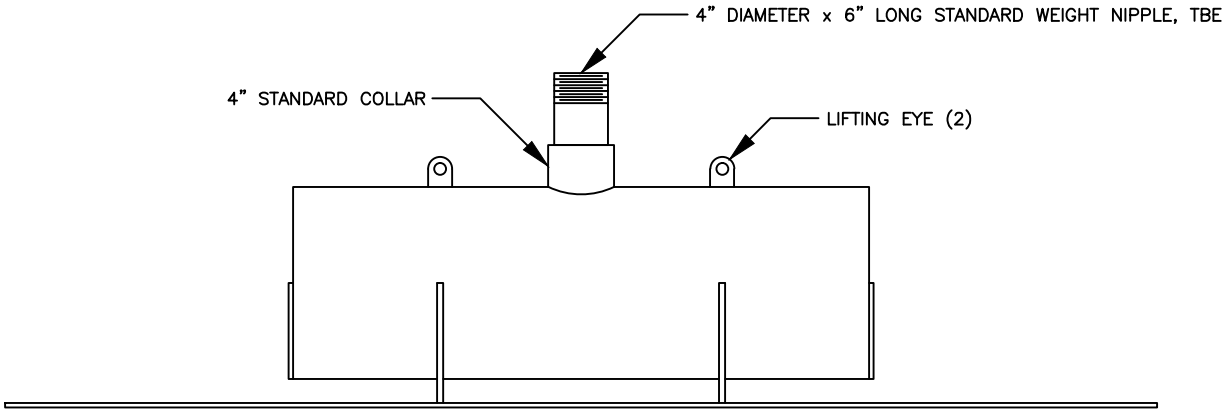

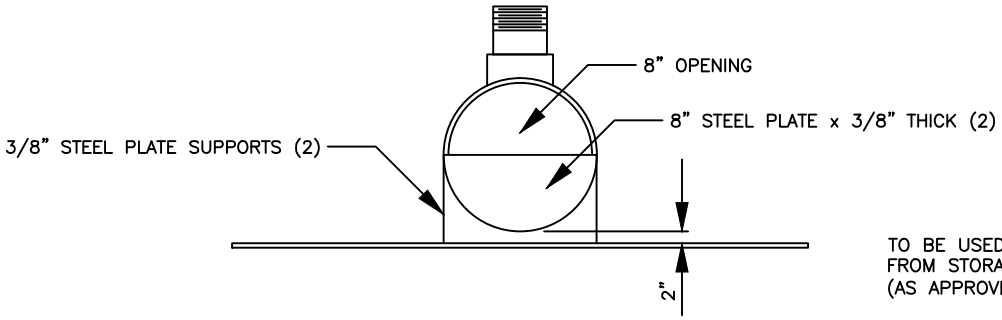

TO BE USED FOR DISCHARGING FROM STORAGE TANK TO STREAM (AS APPROVED BY PERMITTING)

national Fuel SUPPLY CORPORATION	ENGINEERING DEPT. 1100 STATE STREET P.O. BOX 2081 ERIE, PA. 16512 (814) 871-8676	DRAWN BY: L.A.P./P.A.B. FILENAME: NFGSC\BMP03.dwg DATE: 12/09/2013	PIPE TEST ENERGY DISSIPATER	DRAWING NUMBER: 3

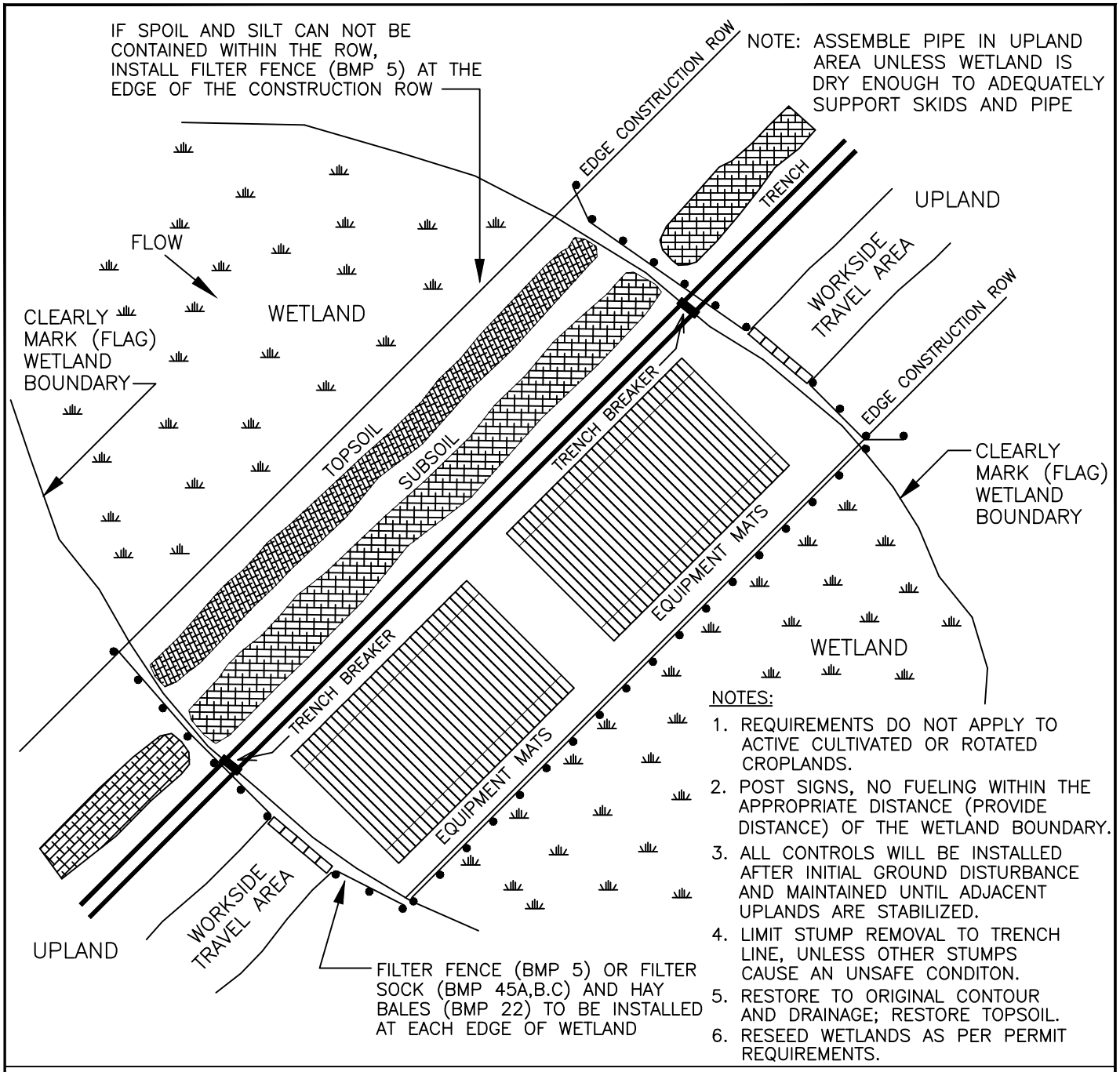

NOTES:

1. REQUIREMENTS DO NOT APPLY TO ACTIVE CULTIVATED OR ROTATED CROPLANDS.
2. POST SIGNS, NO FUELING WITHIN THE APPROPRIATE DISTANCE (PROVIDE DISTANCE) OF THE WETLAND BOUNDARY.
3. ALL CONTROLS WILL BE INSTALLED AFTER INITIAL GROUND DISTURBANCE AND MAINTAINED UNTIL ADJACENT UPLANDS ARE STABILIZED.
4. LIMIT STUMP REMOVAL TO TRENCH LINE, UNLESS OTHER STUMPS CAUSE AN UNSAFE CONDITON.
5. RESTORE TO ORIGINAL CONTOUR AND DRAINAGE; RESTORE TOPSOIL.
6. RESEED WETLANDS AS PER PERMIT REQUIREMENTS.

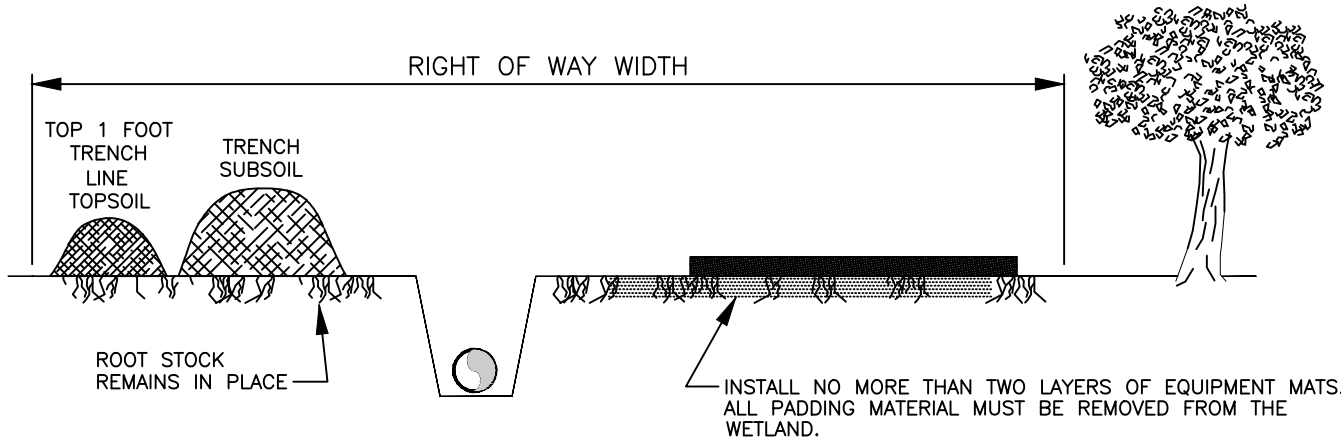

RESTORE TO ORIGINAL CONTOUR AND DRAINAGE; RESTORE TOPSOIL

national Fuel SUPPLY CORPORATION	ENGINEERING DEPT. 1100 STATE STREET P.O. BOX 2081 ERIE, PA. 16512 (814) 871-8676	DRAWN BY: DRISCOLL/PHILLIPS FILENAME: EPC\BMP04.dwg LAST REVISION DATE: 06/27/2007	WETLAND CROSSING	DRAWING NUMBER: 4

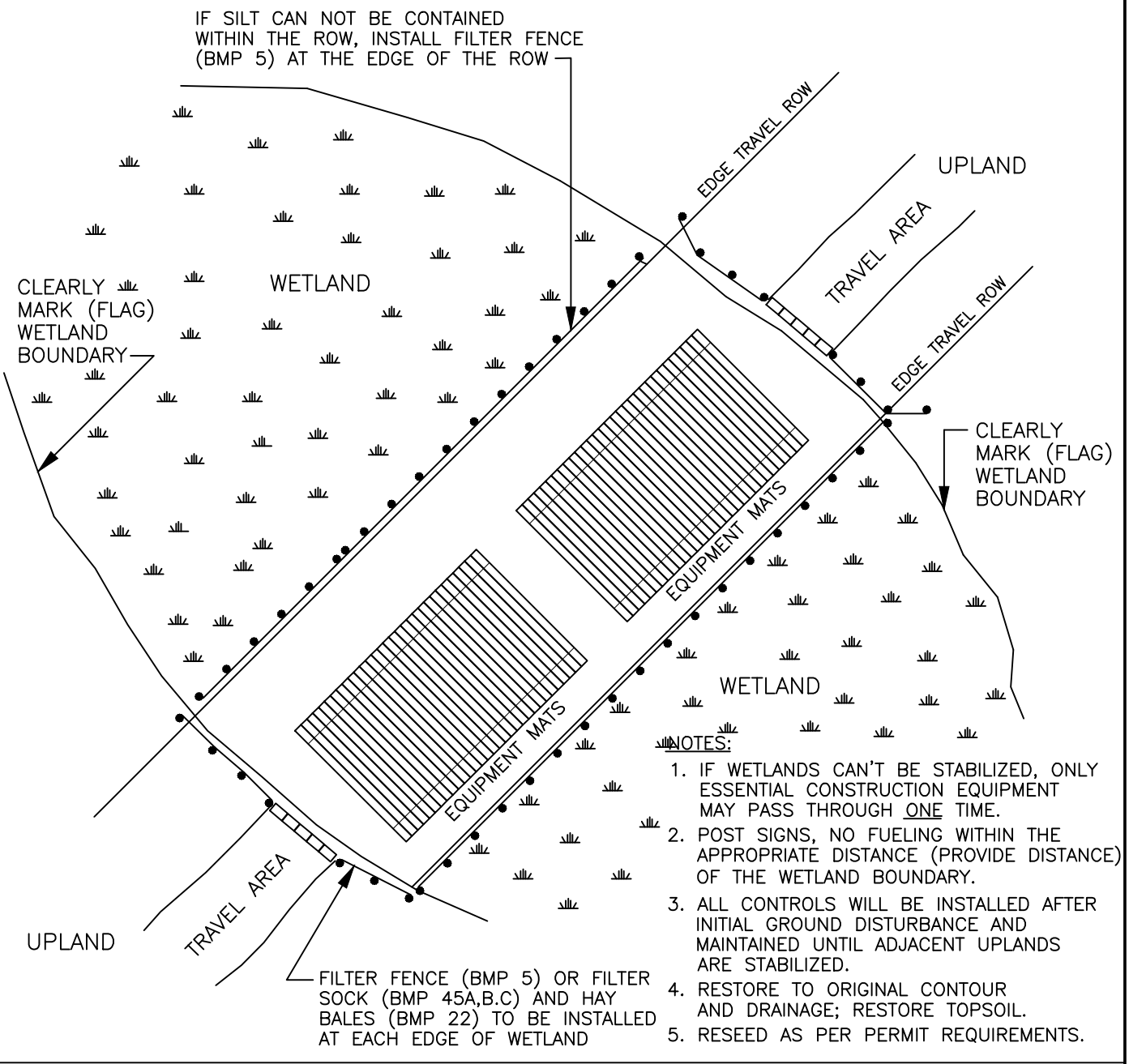

NOTES:

1. IF WETLANDS CAN'T BE STABILIZED, ONLY ESSENTIAL CONSTRUCTION EQUIPMENT MAY PASS THROUGH ONE TIME.
2. POST SIGNS, NO FUELING WITHIN THE APPROPRIATE DISTANCE (PROVIDE DISTANCE) OF THE WETLAND BOUNDARY.
3. ALL CONTROLS WILL BE INSTALLED AFTER INITIAL GROUND DISTURBANCE AND MAINTAINED UNTIL ADJACENT UPLANDS ARE STABILIZED.
4. RESTORE TO ORIGINAL CONTOUR AND DRAINAGE; RESTORE TOPSOIL.
5. RESEED AS PER PERMIT REQUIREMENTS.

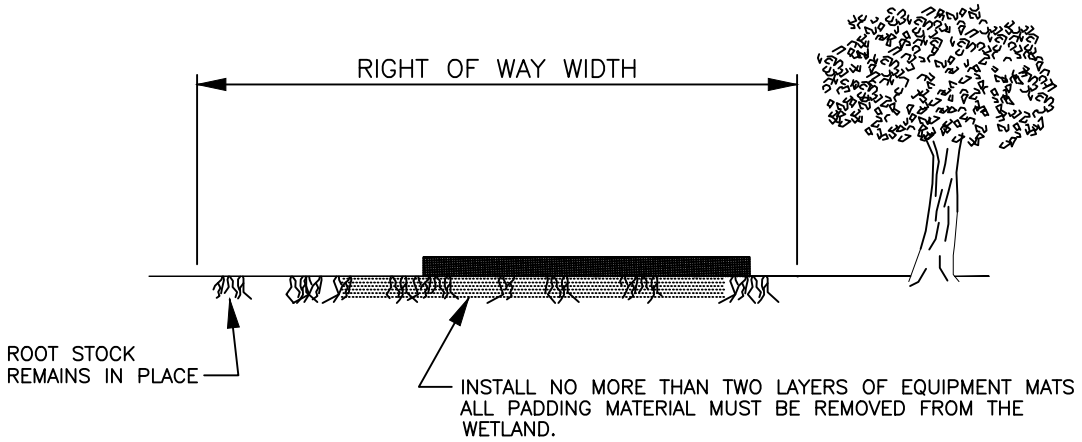

RESTORE TO ORIGINAL CONTOUR AND DRAINAGE; RESTORE TOPSOIL

national Fuel SUPPLY CORPORATION	ENGINEERING DEPT. 1100 STATE STREET P.O. BOX 2081 ERIE, PA. 16512 (814) 871-8676	DRAWN BY: DRISCOLL/PHILLIPS FILENAME: EPC\BMP04A.dwg LAST REVISION DATE: 06/27/2007	WETLAND TRAVEL AREA	DRAWING NUMBER: 4A

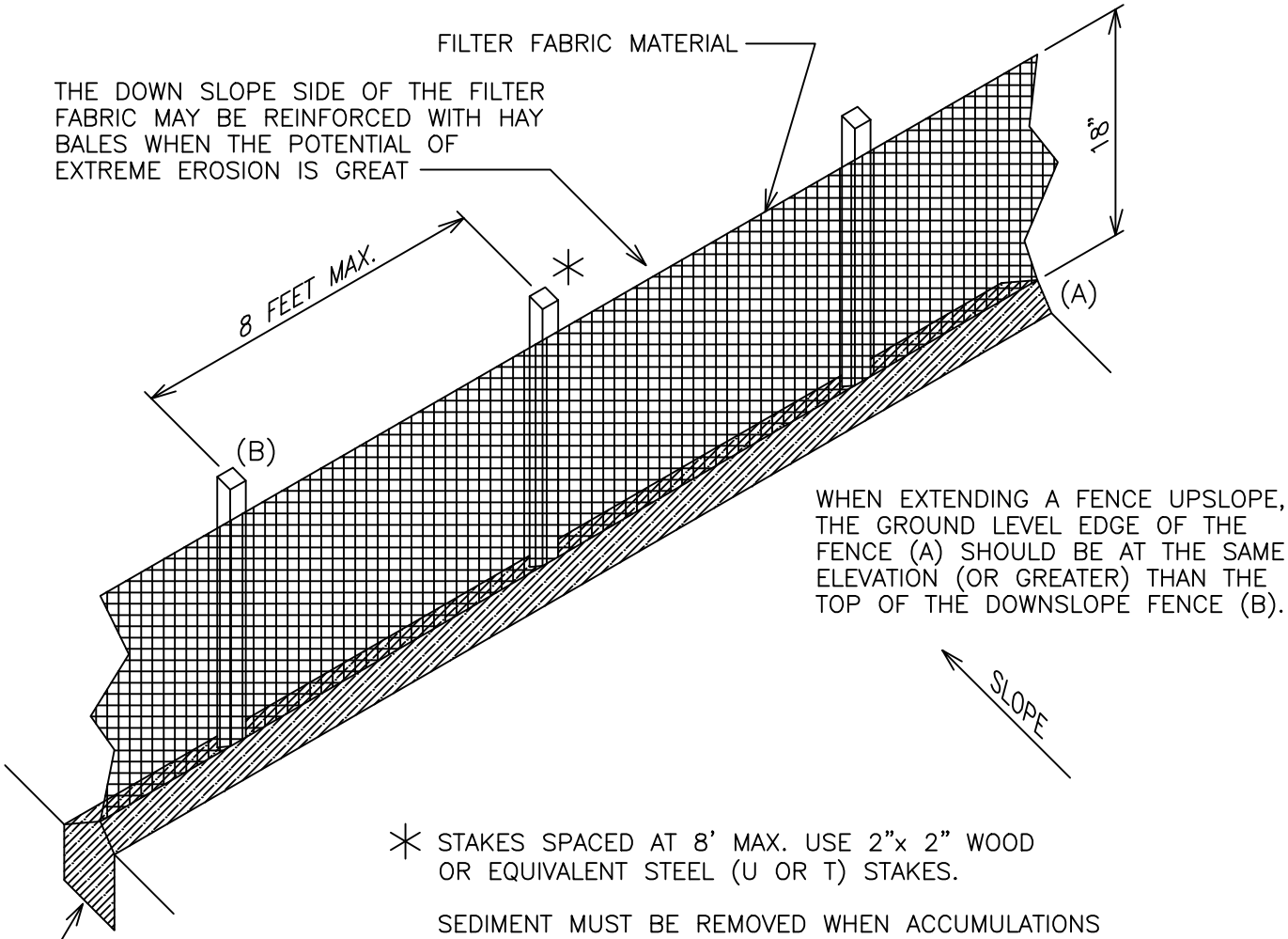

✳ STAKES SPACED AT 8' MAX. USE 2"x 2" WOOD OR EQUIVALENT STEEL (U OR T) STAKES.

SEDIMENT MUST BE REMOVED WHEN ACCUMULATIONS REACH 1/2" THE ABOVE GROUND HEIGHT OF THE FENCE.

FENCE SHALL BE REMOVED AND PROPERLY DIPOSED OF WHEN DISTURBED AREA IS PERMANENTLY STABILIZED.

FENCE DETAIL

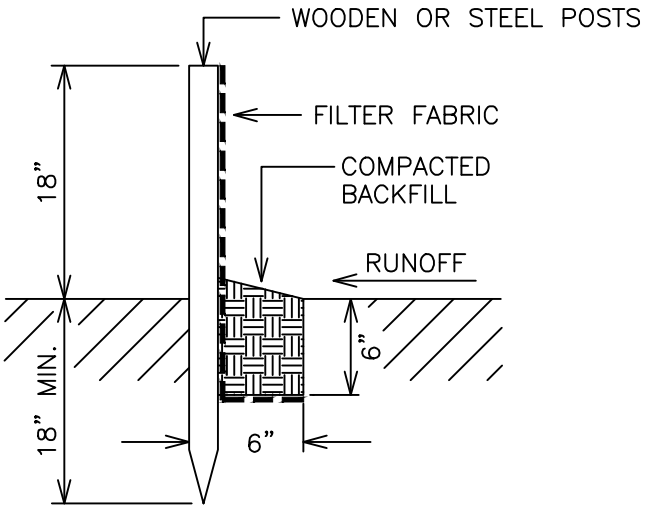

ATTACHING TWO SILT FENCES

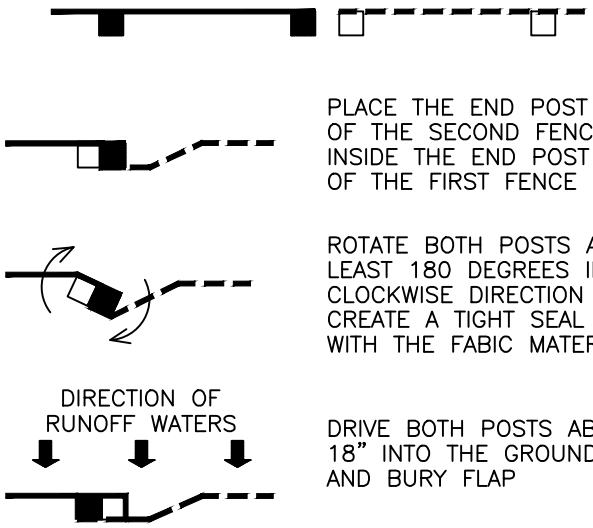

PLACE THE END POST OF THE SECOND FENCE INSIDE THE END POST OF THE FIRST FENCE

ROTATE BOTH POSTS AT LEAST 180 DEGREES IN A CLOCKWISE DIRECTION TO CREATE A TIGHT SEAL WITH THE FABIC MATERIAL

DRIVE BOTH POSTS ABOUT 18" INTO THE GROUND AND BURY FLAP

national Fuel SUPPLY CORPORATION	ENGINEERING DEPT. 1100 STATE STREET P.O. BOX 2081 ERIE, PA. 16512 (814) 871-8676	DRAWN BY: L. A. PHILLIPS FILENAME: NFGSC\BMP05.dwg LAST REVISION DATE: 06/02/2010	FILTER FENCE	DRAWING NUMBER: 5

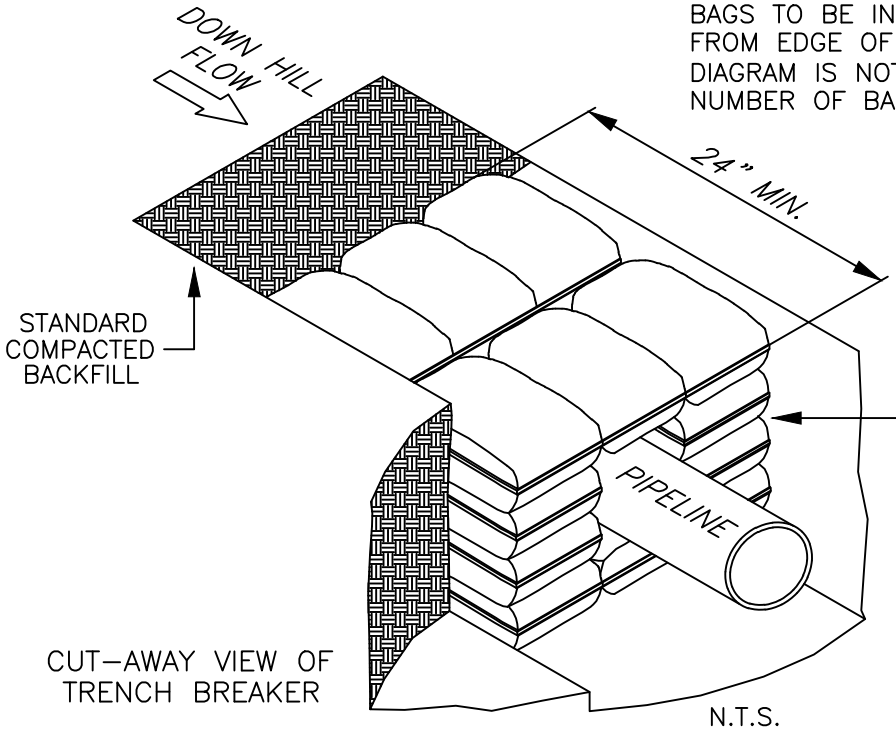

BAGS TO BE INSTALLED TO FILL ENTIRE VOID FROM EDGE OF DITCH TO EDGE OF DITCH. THE DIAGRAM IS NOT A REPRESENTATION OF THE TOTAL NUMBER OF BAGS REQUIRED.

IMPERVIOUS TRENCH BREAKERS (CLAY OR BENTONITE) ARE REQUIRED FOR ALL STREAM, RIVER, WETLAND OR OTHER WATER BODY CROSSINGS.

TEMPORARY TRENCH BREAKERS:

HARD/SOFT PLUG SPACING			
SLOPE	HARD PLUG	(OR)	SOFT PLUG
< 5%	N/A		1000'
5–15%	900'	(OR)	600'
15–30%	600'		400'
>30%	300'		200'

* SEE BMP #8A FOR ADDITIONAL DETAILS

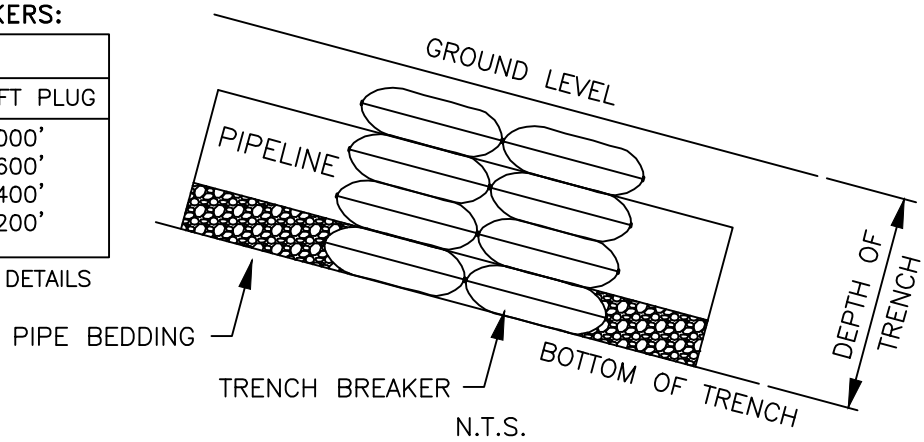

TRENCH BREAKER SLOPE SPACING

- AT THE SPACING LISTED IN THE CHART SHOWN BELOW ON THIS DRAWING.

ADDITIONAL LOCATIONS

AS A MINIMUM, INSTALL A TRENCH BREAKER AT THE BASE OF SLOPES GREATER THAN 5% WHERE THE BASE OF SLOPE IS LESS THAN 50' FROM A WATERBODY OR WETLAND AND WHERE NEEDED TO AVOID DRAINING A WATERBODY OR WETLAND.

PERMANENT TRENCH BREAKERS		
TRENCH SLOPE (%)	SPACING (FT)	PLUG MATERIAL
<5	1,000	* CLAY, BENTONITE, SOIL OR SAND FILLED SACKS
5–15	500	* CLAY, BENTONITE, SOIL OR SAND FILLED SACKS
15–25	300	* CLAY, BENTONITE, SOIL OR SAND FILLED SACKS
25–35	200	* CLAY, BENTONITE, SOIL OR SAND FILLED SACKS
35–100	100	* CLAY, BENTONITE, SOIL OR SAND FILLED SACKS
>100	50	CEMENT FILLED BAGS (WETTED) OF MORTARED STONE

national Fuel SUPPLY CORPORATION	ENGINEERING DEPT. 1100 STATE STREET P.O. BOX 2081 ERIE, PA. 16512 (814) 871–8676	DRAWN BY: L. A. PHILLIPS FILENAME: NFGSC\BMP06A.dwg LAST REVISION DATE: 12/09/2013	TRENCH BREAKER	DRAWING NUMBER: 6A

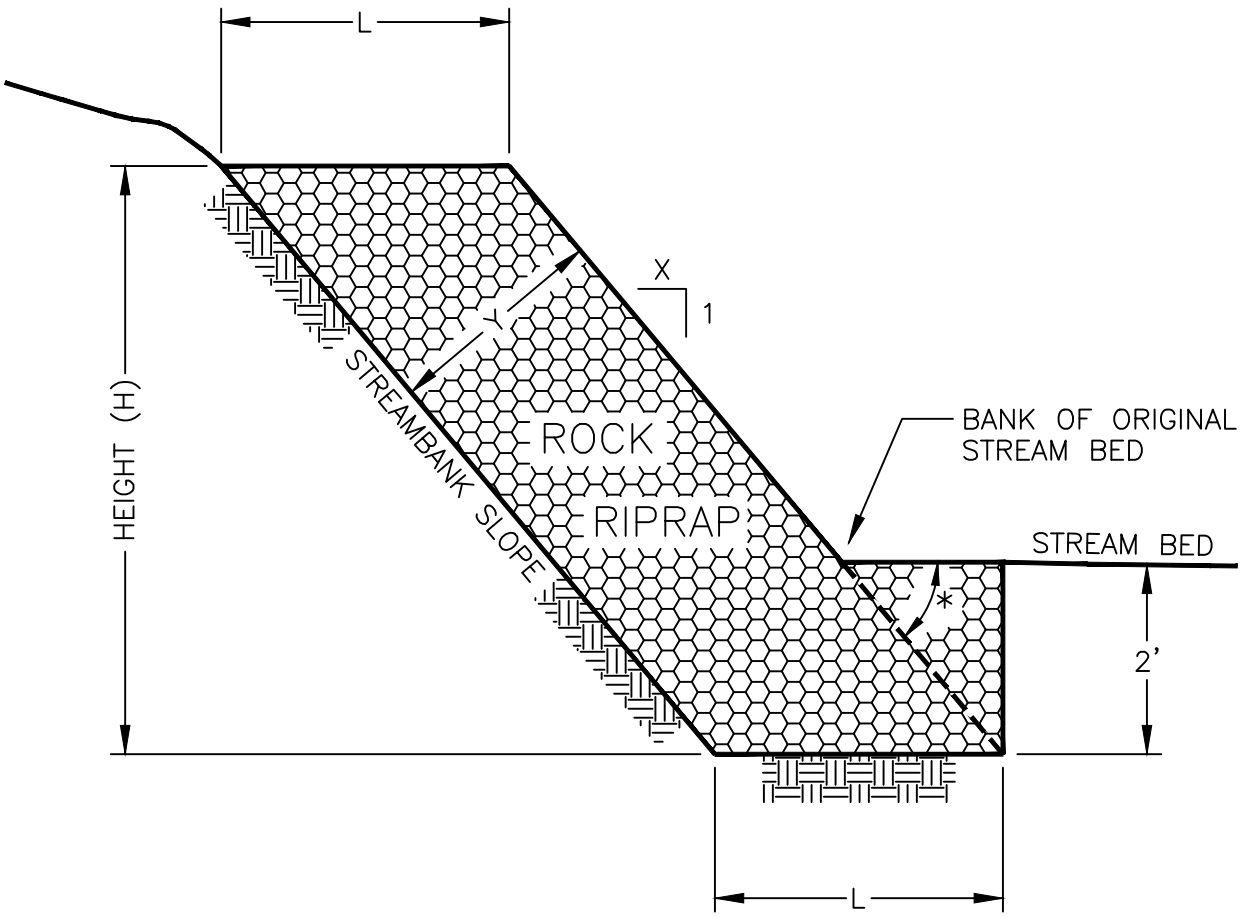

	TABLE OF L VALUES			
(Y) ROCK THICKNESS	SIDE SLOPES			
	1.5:1	2:1	2.5:1	3:1
12"	1.8'	2.2'	2.7'	3.2'
18"	2.7'	3.4'	4.0'	4.7'
24"	3.6'	4.5'	5.4'	6.3'
30"	4.5'	5.6'	6.7'	7.9'
36"	5.4'	6.7'	8.1'	9.5'
42"	6.3'	7.8'	9.4'	11.1'
48"	7.2'	8.9'	10.8'	12.7'
*	33.69°	26.57°	21.80°	18.43°

FORMULAS TO CALCULATE LENGTH OF RIPRAP (L)

$$L = \frac{Y}{\sin *} \quad \text{OR} \quad L = Y\sqrt{X^2 + 1}$$

(ENTER "Y" IN FEET)

national Fuel SUPPLY CORPORATION	ENGINEERING DEPT. 1100 STATE STREET P.O. BOX 2081 ERIE, PA. 16512 (814) 871-8676	DRAWN BY: L. A. PHILLIPS FILENAME: EPC\BMP07.dwg DATE: 01/07/1997	STREAM BANK STABILIZATION	DRAWING NUMBER: 7

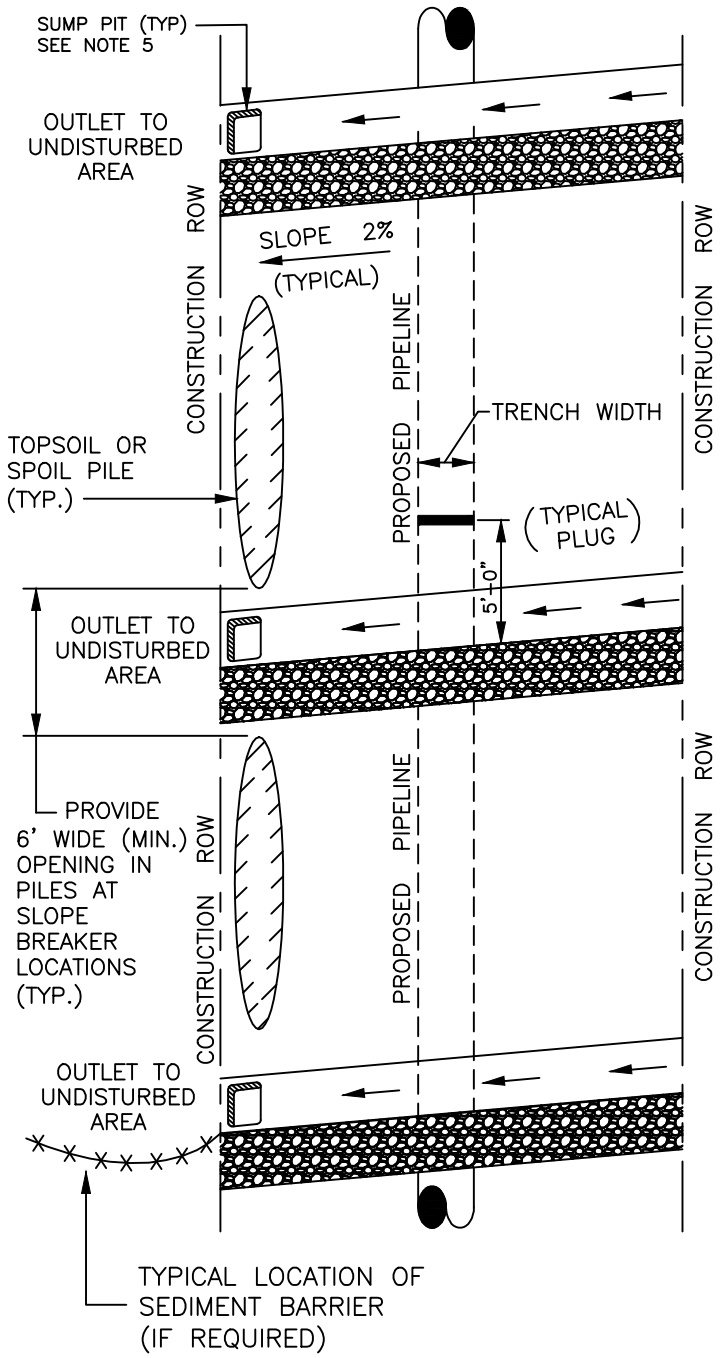

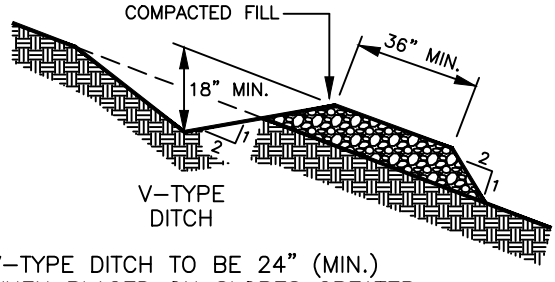

V-TYPE DITCH TO BE 24" (MIN.) WHEN PLACED ON SLOPES GREATER THAN 33% (3H:1V).

TEMPORARY TRENCH BREAKER

HARD/SOFT PLUG SPACING			
SLOPE	HARD PLUG	(OR)	SOFT PLUG
< 5%	N/A		1000'
5–15%	900'	(OR)	600'
15–30%	600'		400'
>30%	300'		200'

NEW YORK PROJECTS SLOPE BREAKER SPACING	
SLOPE	DISTANCE
<5%	125 FEET
5–10%	100 FEET
10–20%	75 FEET
20–35%	50 FEET
>35%	25 FEET

PENNSYLVANIA PROJECTS SLOPE BREAKER SPACING	
SLOPE	DISTANCE
<5%	250 FEET
5–15%	150 FEET
15–30%	100 FEET
>30%	50 FEET

NOTES:

1. DO NOT INSTALL SLOPE BREAKERS TO OUTLET IN THE DIRECTION OF HOUSES OR BUILDINGS.
2. ANY BREAKERS THAT OUTLET ONTO A GRASS YARD WILL BE FILTERED BY A FILTER FENCE.
3. INSTALL AT THE BASE OF SLOPES ADJACENT TO WATERBODIES AND WETLANDS.
4. BREAKERS MAY EXTEND UP TO 4' BEYOND THE EDGE OF CONSTRUCTION IF THE AREA IS ENVIRONMENTALLY CLEARED.
5. OBSTRUCTIONS, (E.G. STRAW BALES, SILT FENCE, ROCK FILTERS, COMPOST SOCKS ETC.)SHOULD NOT BE PLACED IN ANY WATERBARS. WHERE NEEDED, THEY MAY BE LOCATED BELOW THE DISCHARGE END OF THE WATERBAR.
6. HARD PLUGS ARE UN–EXCAVATED PLUGS OF NATIVE SOIL LEFT IN THE PIPELINE TRENCH.
7. SOFT PLUGS ARE COMPACTED SOIL PLUGS THAT ARE PRE–EXCAVATED AND INSTALLED IN THE PIPELINE TRENCH.
8. COMPANY INSPECTOR SHALL DETERMINE THE TYPE OF PLUG TO BE USED.

national Fuel SUPPLY CORPORATION	ENGINEERING DEPT. 1100 STATE STREET P.O. BOX 2081 ERIE, PA. 16512 (814) 871–8676	DRAWN BY: L. A. PHILLIPS FILENAME: EPC\BMP08A.dwg LAST REVISION DATE: 12/09/2013	SLOPE BREAKERS HARD PLUGS AND SOFT PLUGS	DRAWING NUMBER: 8A

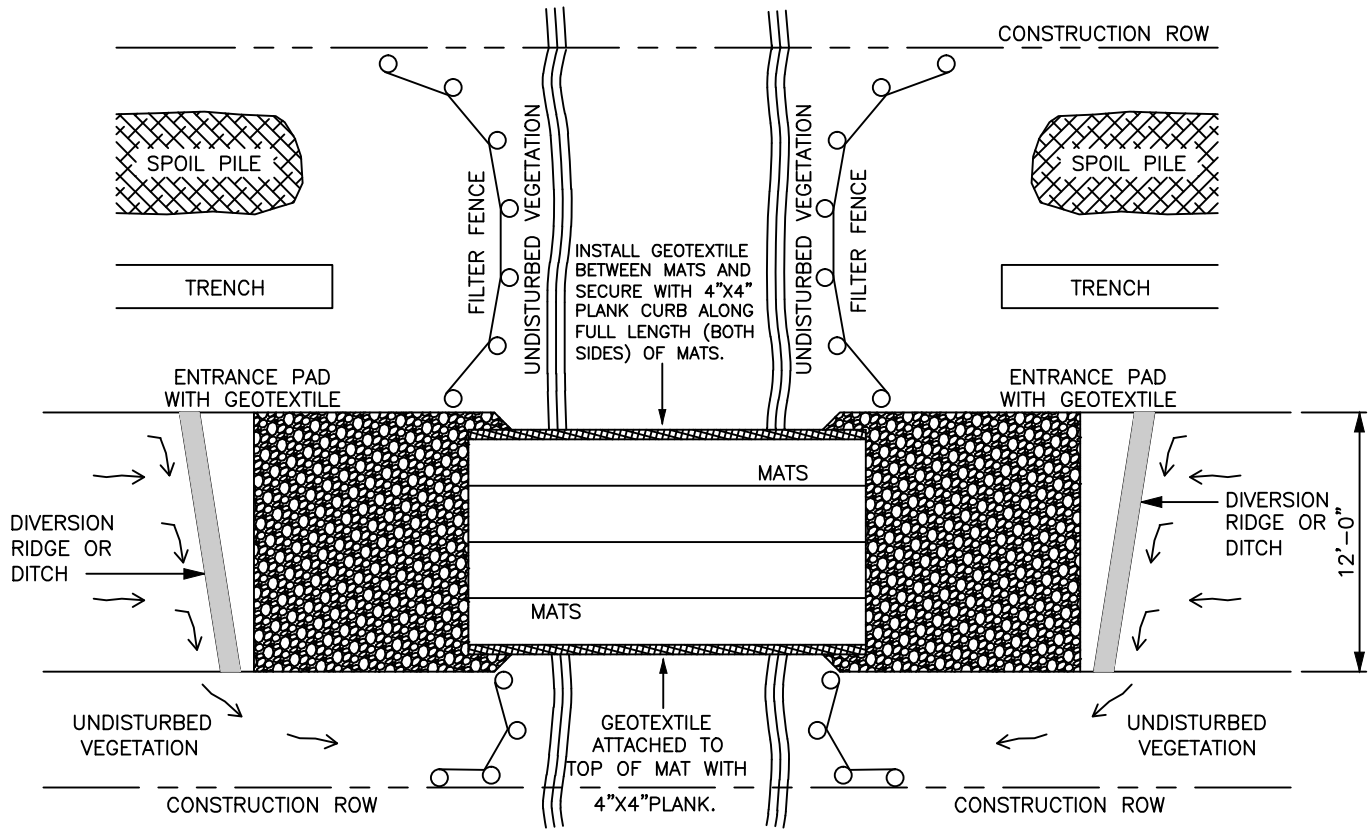

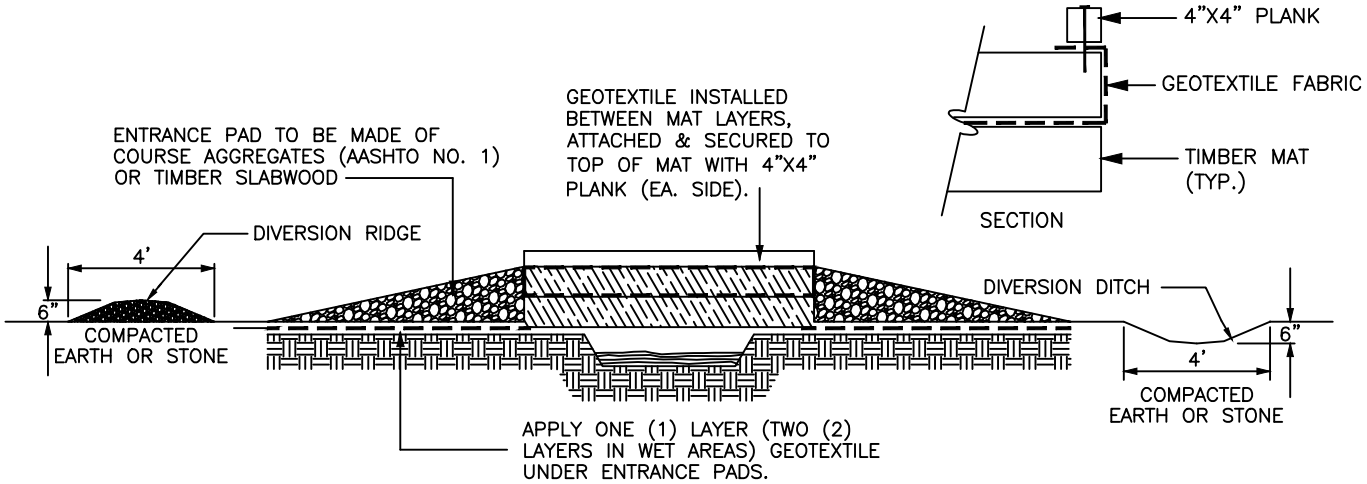

1. ONLY CLEARING EQUIPMENT AND EQUIPMENT NECESSARY FOR INSTALLATION OF EQUIPMENT BRIDGES MAY CROSS WATERBODIES PRIOR TO BRIDGE INSTALLATION. LIMIT THE CROSSING OF EACH WATERBODY TO ONE PER PIECE OF CLEARING EQUIPMENT.
2. INSTALL FILTER FENCE ACROSS THE DISTURBED AREA OF THE R.O.W.
3. APPLY GEOTEXTILE UNDER ENTRANCE PADS. INSTALL GEOTEXTILE BETWEEN MATS AND ATTACH TO TOP MAT.
4. EXCESS MUD IS TO BE REMOVED FROM THE ENTRANCE PADS AND MATS DURING CONSTRUCTION.
5. DURING FINAL CLEAN UP WHEN MATS, CULVERT, CLEAN ROCK FILL, ETC. ARE REMOVED, INSTALL FILTER FENCE ACROSS THE ENTIRE R.O.W. ON BOTH SIDES OF STREAM.
6. LOCATE ALL SPOIL A MINIMUM OF 10 FEET FROM THE WATERS EDGE.

National Fuel SUPPLY CORPORATION	ENGINEERING DEPT. 1100 STATE STREET P.O. BOX 2081 ERIE, PA. 16512 (814) 871-8676	DRAWN BY: L. A. PHILLIPS FILENAME: NFGSC\BMP09.dwg LAST REVISION DATE: 12/09/2013	STREAM MAT	DRAWING NUMBER: 9

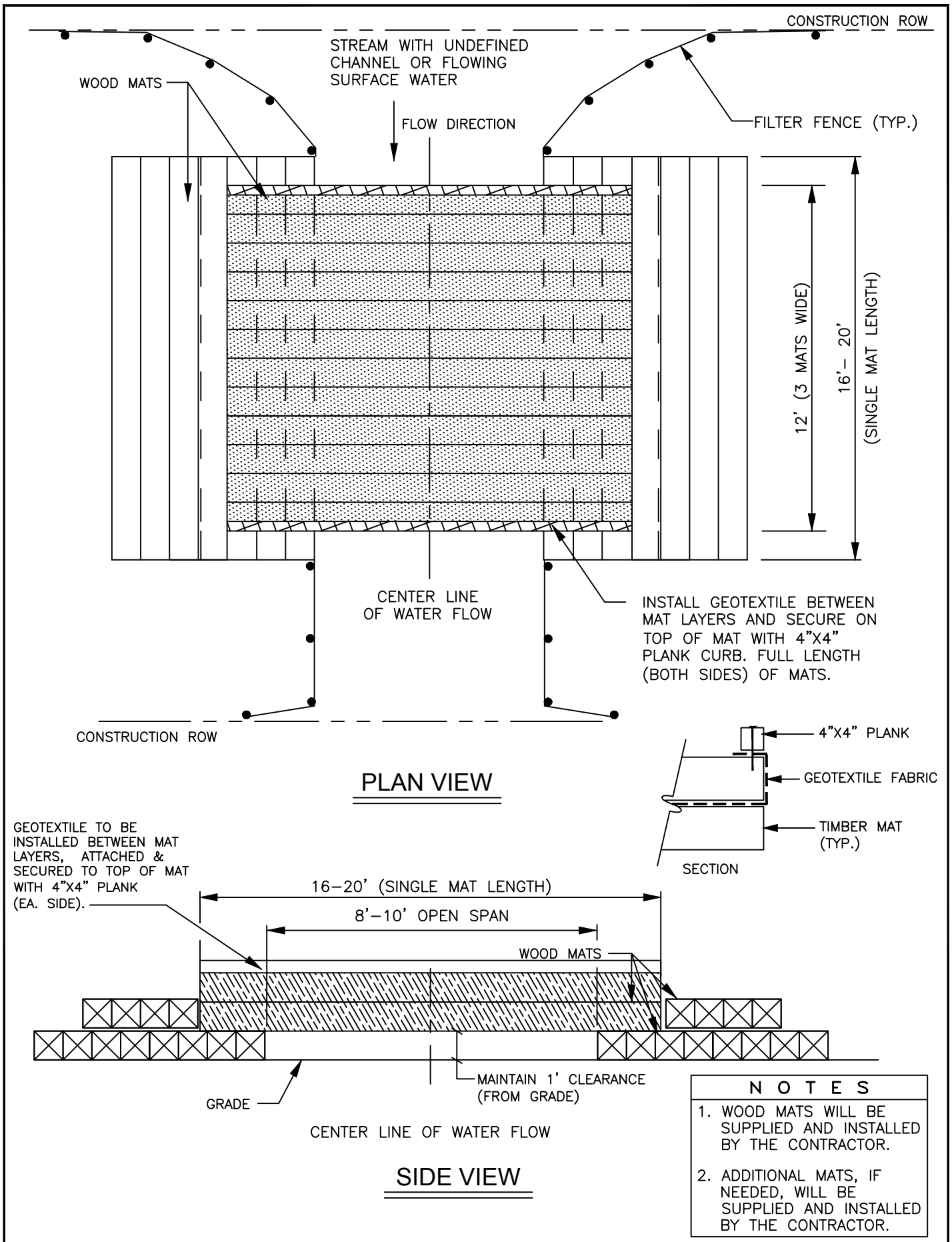

N O T E S
1. WOOD MATS WILL BE SUPPLIED AND INSTALLED BY THE CONTRACTOR.
2. ADDITIONAL MATS, IF NEEDED, WILL BE SUPPLIED AND INSTALLED BY THE CONTRACTOR.

national Fuel SUPPLY CORPORATION	ENGINEERING DEPT. 1100 STATE STREET P.O. BOX 2081 ERIE, PA. 16512 (814) 871–8676	DRAWN BY: K. HURLEY FILENAME: EPC\BMP9A.dwg DATE: 12/09/2013	STREAM MAT @ UNDEFINED CHANNEL	DRAWING NUMBER: 9A

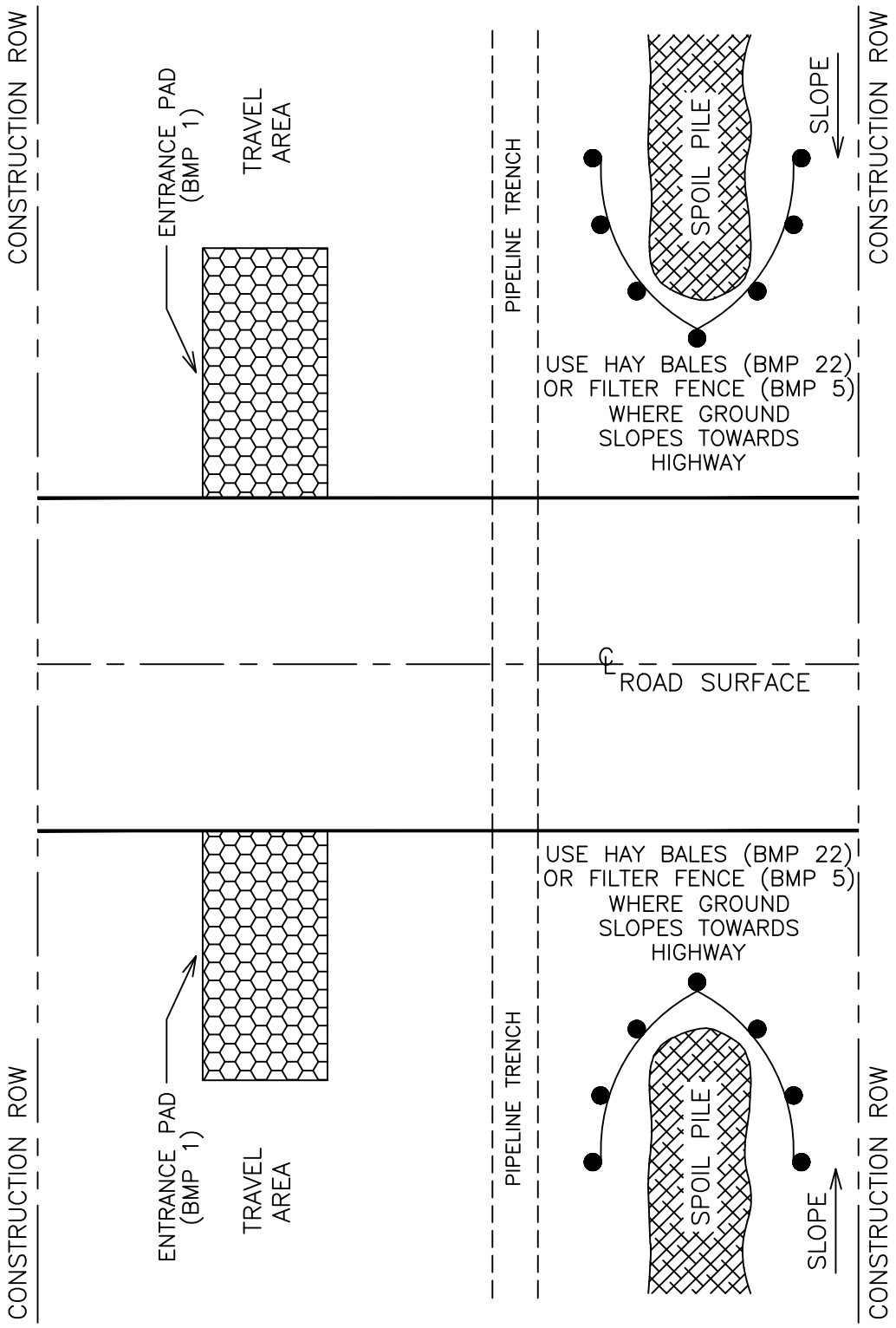

national Fuel SUPPLY CORPORATION	ENGINEERING DEPT. 1100 STATE STREET P.O. BOX 2081 ERIE, PA. 16512 (814) 871-8676	DRAWN BY: L. A. PHILLIPS FILENAME: EPC\BMP10.dwg LAST REVISION DATE: 06/27/2007	ROAD CROSSING (OPEN CUT)	DRAWING NUMBER: 10

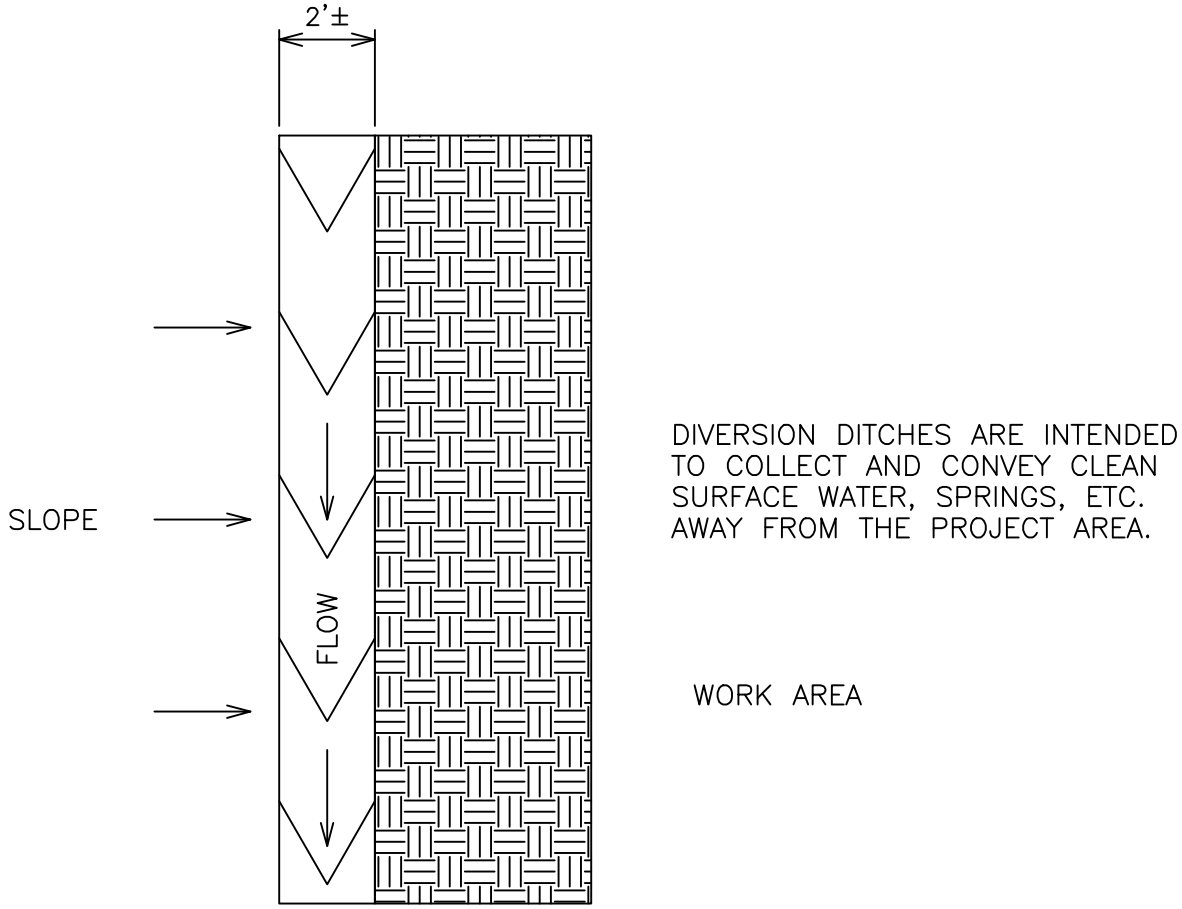

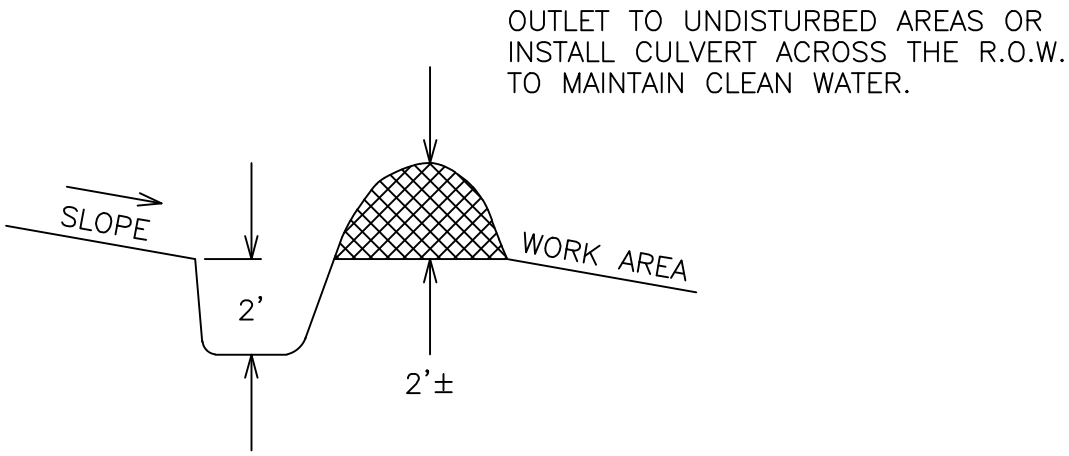

national Fuel SUPPLY CORPORATION	ENGINEERING DEPT. 1100 STATE STREET P.O. BOX 2081 ERIE, PA. 16512 (814) 871-8676	DRAWN BY: L. A. PHILLIPS FILENAME: NFGSC\BMP11.dwg DATE: 01/08/1997	DIVERSION DITCH	DRAWING NUMBER: 11

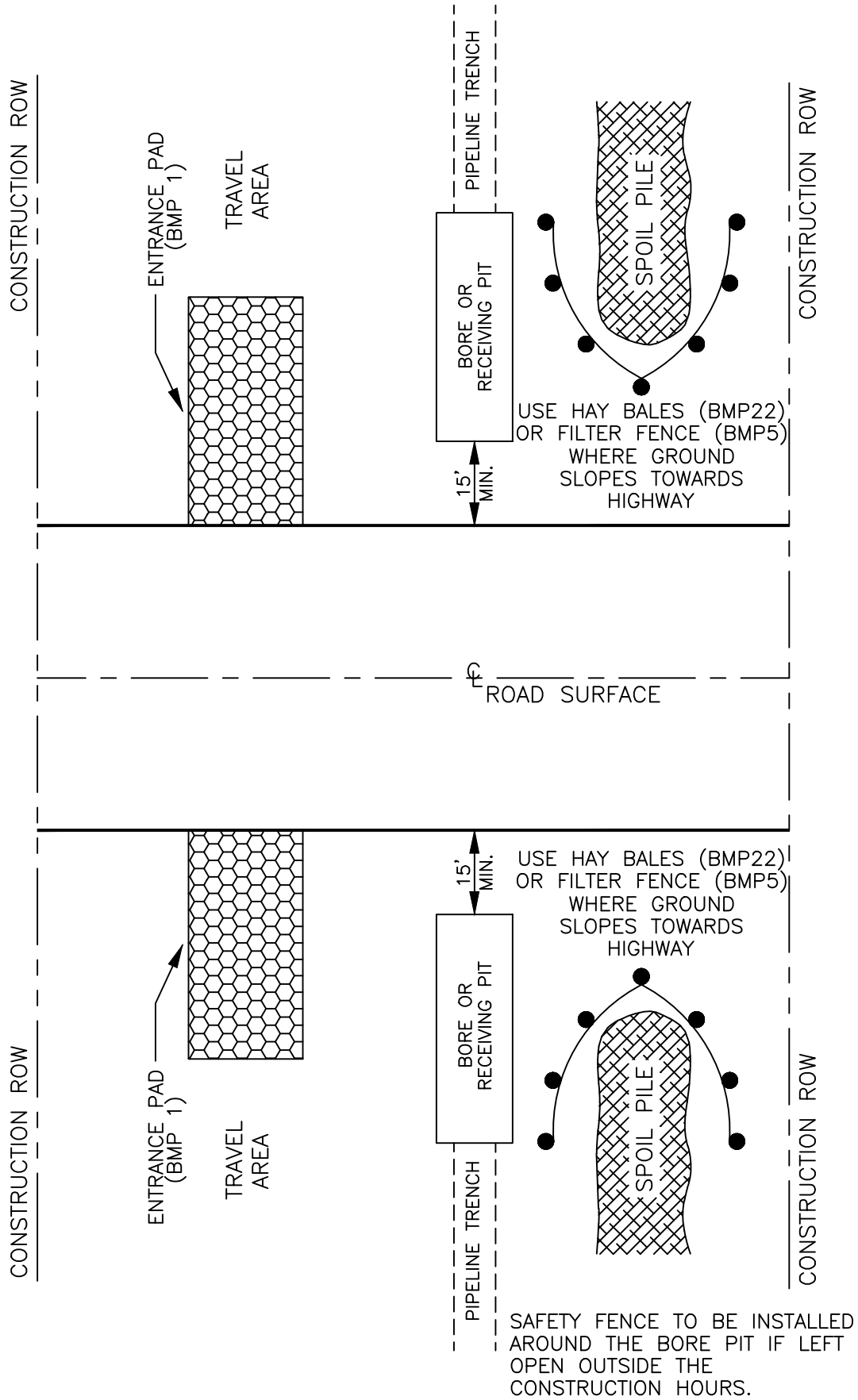

national Fuel SUPPLY CORPORATION	ENGINEERING DEPT. 1100 STATE STREET P.O. BOX 2081 ERIE, PA. 16512 (814) 871-8676	DRAWN BY: L. A. PHILLIPS FILENAME: EPC\BMP12.dwg LAST REVISION DATE: 06/27/2007	ROAD CROSSING (BORE)	DRAWING NUMBER: 12

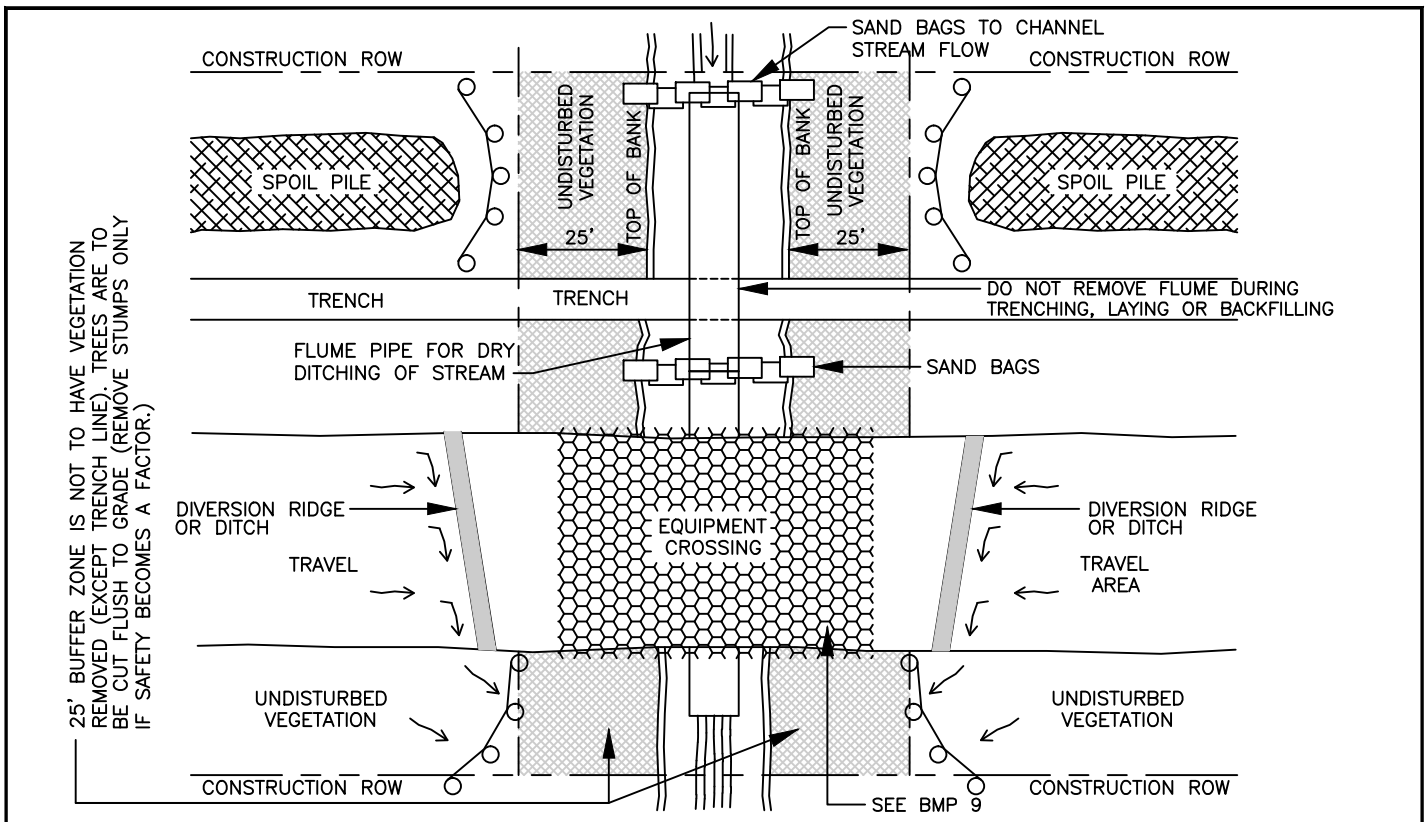

SPOIL REMOVED DURING TRENCH CONSTRUCTION OF CROSSING MAY BE PLACED 10 FT BACK FROM ORDINARY HIGH WATER MARK PROVIDED E&S CONTROLS INSTALLED.

UNDISTURBED VEGETATION BUFFER SHALL BE 25 FT OR TO EDGE OF EXISTING NON-NATIVE VEGETATION WHERE THAT DISTANCE IS <25 FT.

DURING CONSTRUCTION

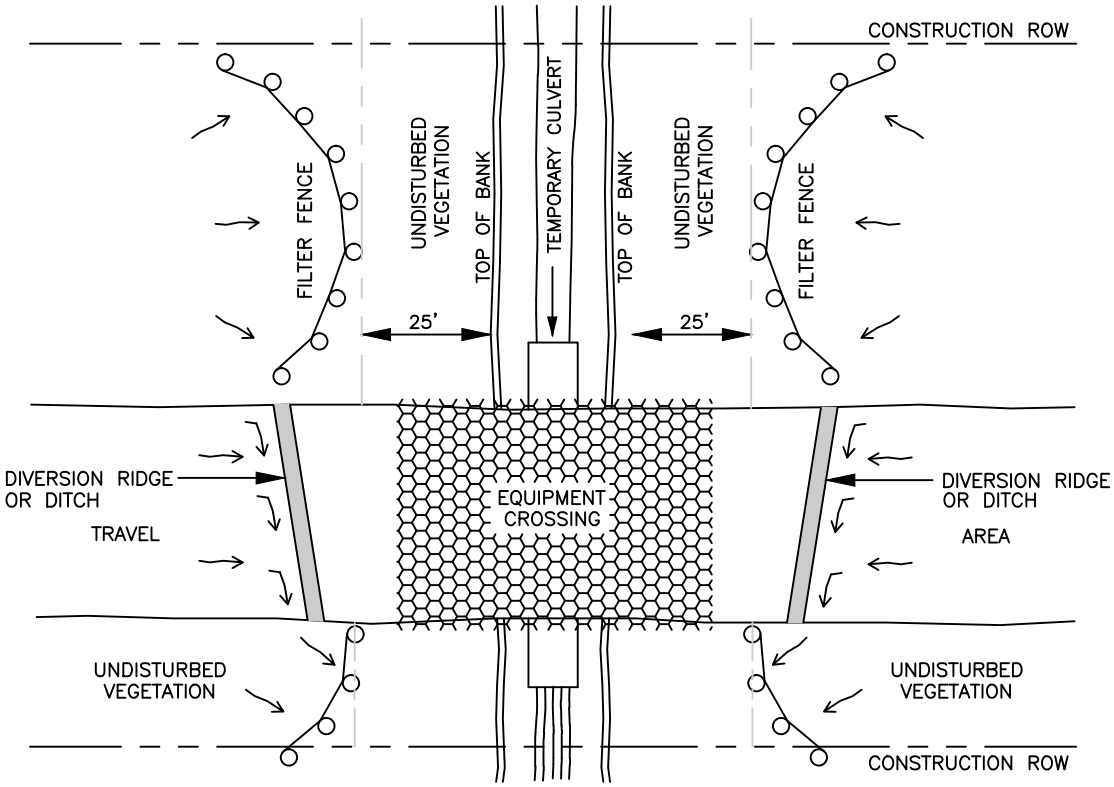

AFTER CONSTRUCTION

NOTE:
DRY-DITCH CROSSING METHODS CAN BE USED FOR WATERBODIES UP TO 30'.

national Fuel SUPPLY CORPORATION	ENGINEERING DEPT. 1100 STATE STREET P.O. BOX 2081 ERIE, PA. 16512 (814) 871-8676	DRAWN BY: DRISCOLL/PHILLIPS FILENAME: EPC\BMP13.dwg LAST REVISION DATE: 04/29/2008	FLUME (DRY DITCH) STREAM	DRAWING NUMBER: 13

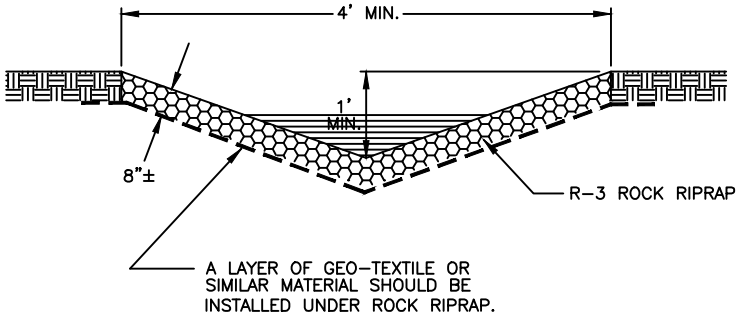

ROCK SIZE (INCHES)
MAX. 6"
AVG. 3"
MIN. 2"

VELOCITY = 6.5'/SEC.
Q = 13 CFS

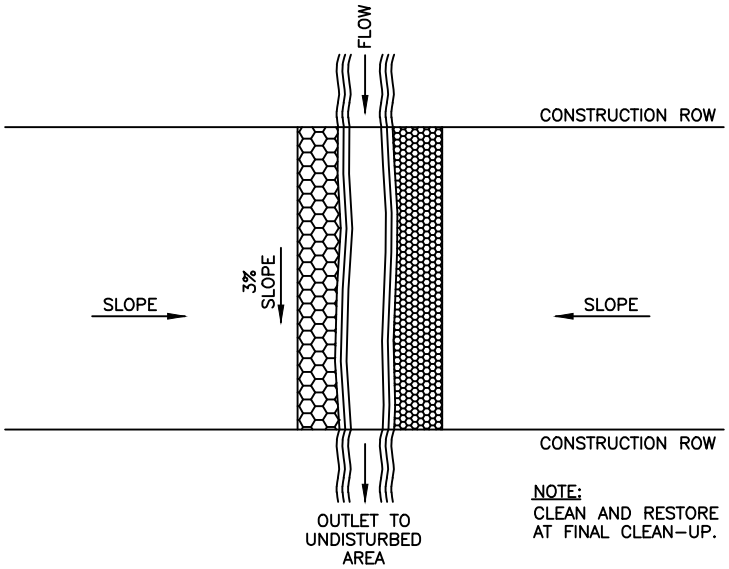

NOTE:
CLEAN AND RESTORE DITCH AT FINAL CLEAN-UP.

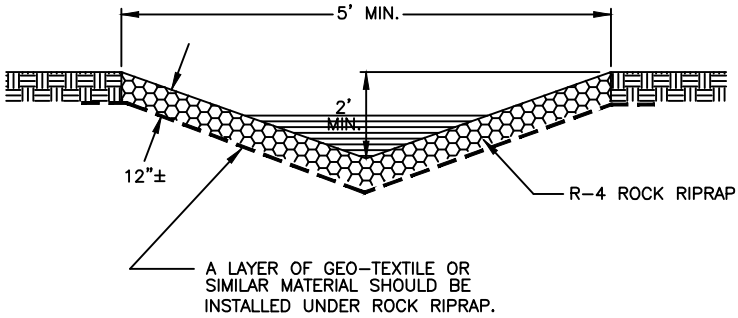

ROCK SIZE (INCHES)
MAX. 12"
AVG. 6"
MIN. 3"

VELOCITY = 8.7'/SEC.
Q = 43 CFS

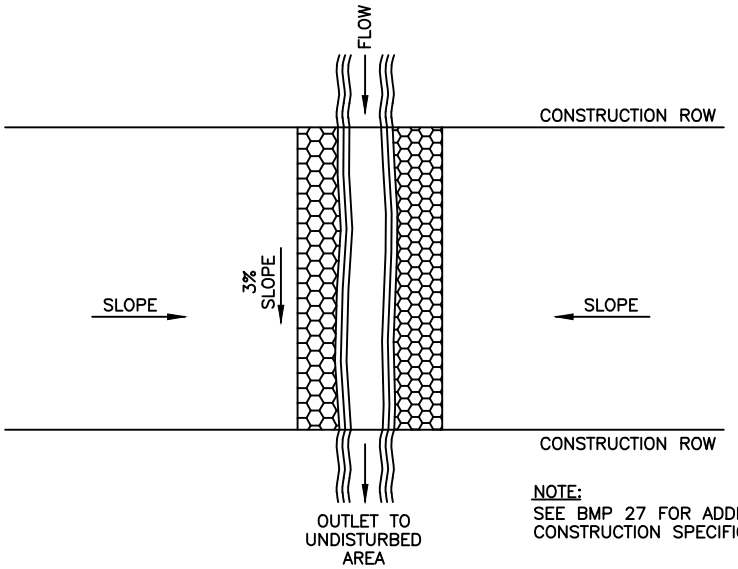

NOTE:
SEE BMP 27 FOR ADDITIONAL DETAILS, CONSTRUCTION SPECIFICATIONS AND MAINTENANCE.

national Fuel SUPPLY CORPORATION	ENGINEERING DEPT. 1100 STATE STREET P.O. BOX 2081 ERIE, PA. 16512 (814) 871-8676	DRAWN BY: L. A. PHILLIPS FILENAME: EPC\BMP14.dwg LAST REVISION DATE: 06/27/2007	RUN OFF DITCH	DRAWING NUMBER: 14

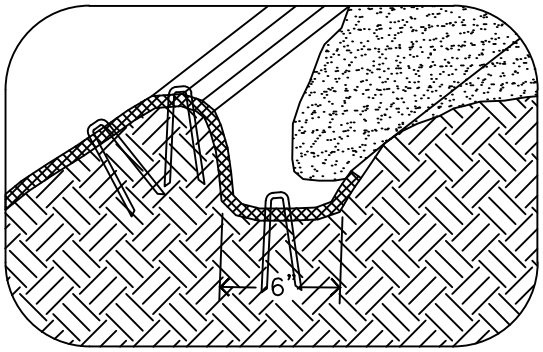

LONGITUDINAL ANCHOR TRENCH

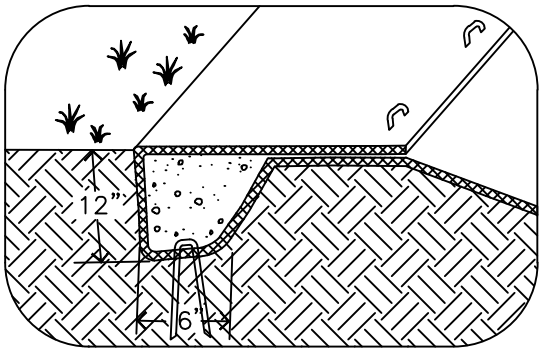

TERMINAL SLOPE AND CHANNEL ANCHOR TRENCH

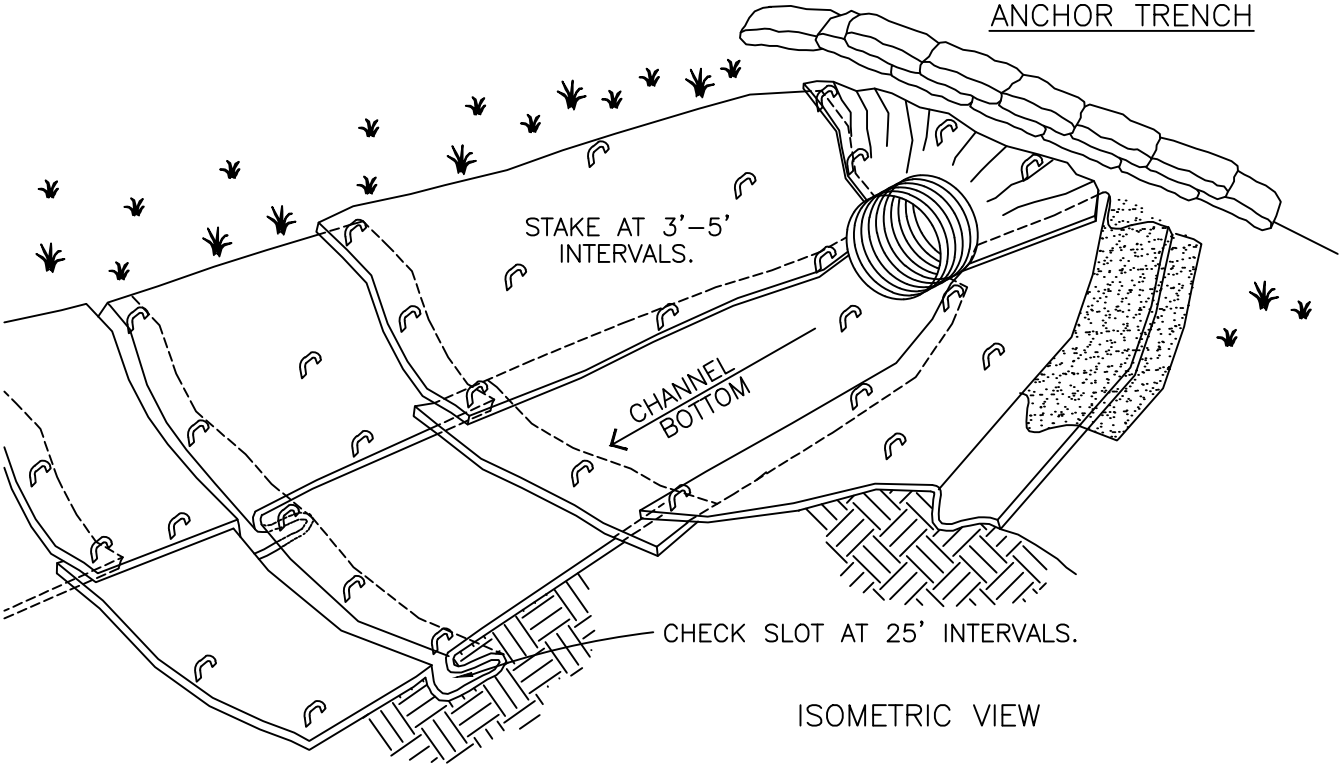

ISOMETRIC VIEW

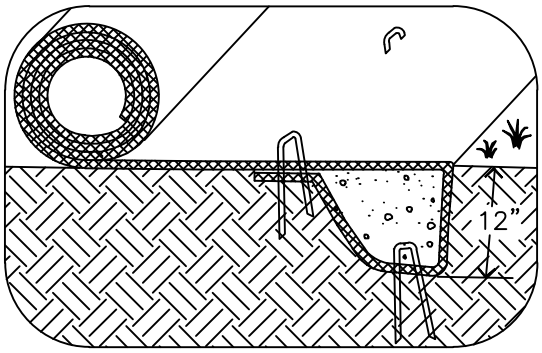

INITIAL CHANNEL ANCHOR TRENCH

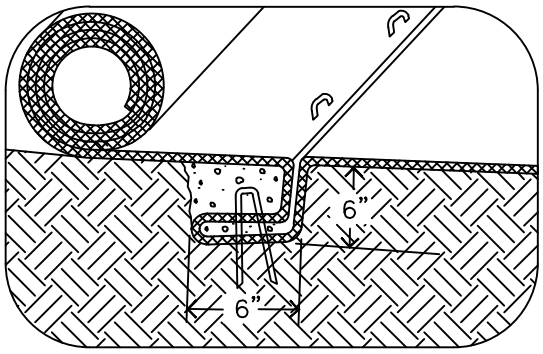

INTERMITTENT CHECK SLOT

NOTES:

1. CHECK SLOTS TO BE CONSTRUCTED PER MANUFACTURERS SPECIFICATIONS.
2. STAKING OR STAPLING LAYOUT PER MANUFACTURERS SPECIFICATIONS.
3. SEE DRAWING NO. 15A FOR INSTALLATION SPECIFICATIONS.

© 1994 JOHN McCULLAH

National Fuel SUPPLY CORPORATION	ENGINEERING DEPT. 1100 STATE STREET P.O. BOX 2081 ERIE, PA. 16512 (814) 871–8676	MODIFIED BY: L. A. PHILLIPS FILENAME: NFGSC\BMP15.dwg DATE: 01/09/1997	EROSION BLANKETS CHANNEL INSTALLATION	DRAWING NUMBER: 15

CONSTRUCTION SPECIFICATIONS:

SITE PREPARATION

1. PROPER SITE PREPARATION IS ESSENTIAL TO ENSURE COMPLETE CONTACT OF THE PROTECTION MATTING WITH THE SOIL.
2. GRADE AND SHAPE AREA OF INSTALLATION.
3. REMOVE ALL ROCKS, CLODS, VEGETATIVE OR OTHER OBSTRUCTIONS SO THAT THE INSTALLED BLANKETS, OR MATS WILL HAVE DIRECT CONTACT WITH THE SOIL.
4. PREPARE SEEDBED BY LOOSENING 2"–3" OF TOPSOIL ABOVE FINAL GRADE.
5. INCORPORATE AMENDMENTS, SUCH AS LIME AND FERTILIZER, INTO SOIL ACCORDING TO SOIL TEST AND THE SEEDING PLAN.

SEEDING

SEED AREA BEFORE BLANKET INSTALLATION FOR EROSION CONTROL AND RE–VEGETATION OR SEED AFTER MAT INSTALLATION FOR TURF REINFORCEMENT. WHEN SEEDING PRIOR TO BLANKET INSTALLATION, ALL CHECK SLOTS AND OTHER AREAS DISTURBED DURING INSTALLATION MUST BE RESEEDED. WHERE SOIL FILLING IS SPECIFIED, SEED THE MATTING AND THE ENTIRE DISTURBED AREA AFTER INSTALLATION AND PRIOR TO FILLING THE MAT WITH SOIL.

ANCHORING

U–SHAPED WIRE STAPLES, METAL GEOTEXTILE STAKE PINS OR TRIANGULAR WOODEN STAKES CAN BE USED TO ANCHOR MATS TO THE GROUND SURFACE. WIRE STAPLES SHOULD BE A MINIMUM OF 8 GAUGE. METAL STAKE PINS SHOULD BE 3/16" DIAMETER STEEL WITH A 1 1/2" STEEL WASHER AT THE HEAD OF THE PIN. WIRE STAPLES AND METAL STAKE SHOULD BE DRIVEN FLUSH TO THE SOIL SURFACE. WOODEN STAKES SHOULD BE 3" X 1 1/2" TRIANGULAR WOODEN SURVEY STAKES. TWO INCHES OF WOOD STAKING SHOULD REMAIN ABOVE THE SOIL SURFACE. ALL ANCHORS SHOULD BE 8"–18" LONG AND HAVE SUFFICIENT GROUND PENETRATION TO RESIST PULLOUT. LONGER ANCHORS MAY BE REQUIRED FOR LOOSE SOILS.

INSTALLATION IN CHANNELS

1. DIG INITIAL ANCHOR TRENCH 12" DEEP AND 6" WIDE ACROSS THE CHANNEL AT THE LOWER END OF THE PROJECT AREA.
2. EXCAVATE INTERMITTENT CHECK SLOTS, 6" DEEP AND 6" WIDE ACROSS THE CHANNEL AT 25' TO 30' INTERVALS ALONG THE CHANNEL.
3. CUT LONGITUDINAL CHANNEL ANCHOR SLOTS 4" DEEP AND 4" WIDE ALONG EACH SIDE OF THE INSTALLATION TO BURY EDGES OF MATTING, WHENEVER POSSIBLE EXTEND MATTING 2 – 3 ABOVE THE CREST OF CHANNEL SIDE SLOPES.
4. BEGINNING AT THE DOWNSTREAM END AND IN THE CENTER OF THE CHANNEL, PLACE THE INITIAL END OF THE FIRST ROLL IN THE ANCHOR TRENCH AND SECURE WITH FASTENING DEVICES AT 1' INTERVALS. NOTE: MATTING WILL INITIALLY BE UPSIDE DOWN IN ANCHOR TRENCH.
5. IN SAME MANNER, POSITION ADJACENT ROLLS IN ANCHOR TRENCH, OVERLAPPING THE PRECEDING ROLL A MINIMUM OF 3".
6. SECURE THESE INITIAL ENDS OF MATS WITH ANCHORS AT 1' INTERVALS, BACKFILL AND COMPACT SOIL.
7. UNROLL CENTER STRIP OF MATTING UPSTREAM. STOP AT NEXT CHECK SLOT OR TERMINAL ANCHOR TRENCH.
8. UNROLL ADJACENT MATS UPSTREAM IN SIMILAR FASHION, MAINTAINING 3" OVERLAP.
9. FOLD AND SECURE ALL ROLLS OF MATTING SNUGLY INTO ALL TRANSVERSE CHECK SLOTS. LAY MAT IN THE BOTTOM OF THE SLOT THEN FOLD BACK AGAINST ITSELF. ANCHOR THROUGH BOTH LAYERS OF MAT AT 1 INTERVALS THEN BACKFILL AND COMPACT SOIL. CONTINUE ROLLING ALL MAT WIDTHS UPSTREAM TO THE NEXT CHECK SLOT OR TERMINAL ANCHOR TRENCH.
10. ALTERNATE METHOD FOR NONCRITICAL INSTALLATIONS: PLACE TWO ROWS OF ANCHORS ON 6 CENTERS AT 25' TO 30' INTERVALS IN LIEU OF EXCAVATED CHECK SLOTS.
11. SHINGLE–LAP SPLICED ENDS BY A MINIMUM OF 1' WITH UPSTREAM MAT ON TOP TO PREVENT UPLIFTING BY WATER OR BEGIN NEW ROLLS IN A CHECK SLOT. ANCHOR OVERLAPPED AREA BY PLACING TWO ROWS OF ANCHORS, 1' APART ON 1' INTERVALS.
12. PLACE EDGES OF OUTSIDE MATS IN PREVIOUSLY EXCAVATED LONGITUDINAL SLOTS, ANCHOR USING PRESCRIBED STAPLE PATTERN, BACKFILL AND COMPACT SOIL.
13. ANCHOR, FILL AND COMPACT UPSTREAM END OF MAT IN A 12" X 6" TERMINAL TRENCH.
14. SECURE MAT TO GROUND SURFACE USING U–SHAPED WIRE STAPLES GEOTEXTILE PINS OR WOODEN STAKES.
15. SEED AND FILL TURF REINFORCEMENT MATTING WITH SOIL, IF SPECIFIED.

SOIL FILLING IF SPECIFIED FOR TURF REINFORCEMENT.

1. AFTER SEEDING, SPREAD AND LIGHTLY RAKE 1/2" – 3/4" OF FINE TOPSOIL INTO THE MAT APERTURES TO COMPLETELY FILL MAT THICKNESS.
2. USE BACKSIDE OF RAKE OR OTHER FLAT IMPLEMENT.
3. SPREAD TOPSOIL USING LIGHTWEIGHT LOADER, BACKHOE, OR OTHER POWER EQUIPMENT. AVOID SHARP TURNS WITH EQUIPMENT.
4. DO NOT DRIVE TRACKED OR HEAVY EQUIPMENT OVER MAT.
5. AVOID ANY TRAFFIC OVER MATTING IF LOOSE OR WET SOIL CONDITIONS EXIST.
6. USE SHOVELS, RAKES OR BROOMS FOR FINE GRADING AND TOUCH UP.
7. SMOOTH OUT SOIL FILLING JUST EXPOSING TOP NETTING OF MATRIX.

INSPECTION AND MAINTENANCE

1. ALL BLANKET AND MATS SHOULD BE INSPECTED PERIODICALLY FOLLOWING INSTALLATION.
2. INSPECT INSTALLATION AFTER SIGNIFICANT RAINSTORMS TO CHECK FOR EROSION AND UNDERMINING. ANY FAILURE SHOULD BE REPAIRED IMMEDIATELY.
3. IF WASHOUT OR BREAKAGE OCCURS, RE–INSTALL THE MATERIAL AFTER REPAIRING THE DAMAGE TO THE SLOPE OR DRAINAGEWAY.

© 1994 JOHN McCULLAH

national Fuel SUPPLY CORPORATION	ENGINEERING DEPT. 1100 STATE STREET P.O. BOX 2081 ERIE, PA. 16512 (814) 871–8676	MODIFIED BY: L. A. PHILLIPS FILENAME: NFGSC\BMP15A.dwg DATE: 01/09/1997	SPECIFICATIONS EROSION BLANKETS CHANNEL INSTALLATION	DRAWING NUMBER: 15A

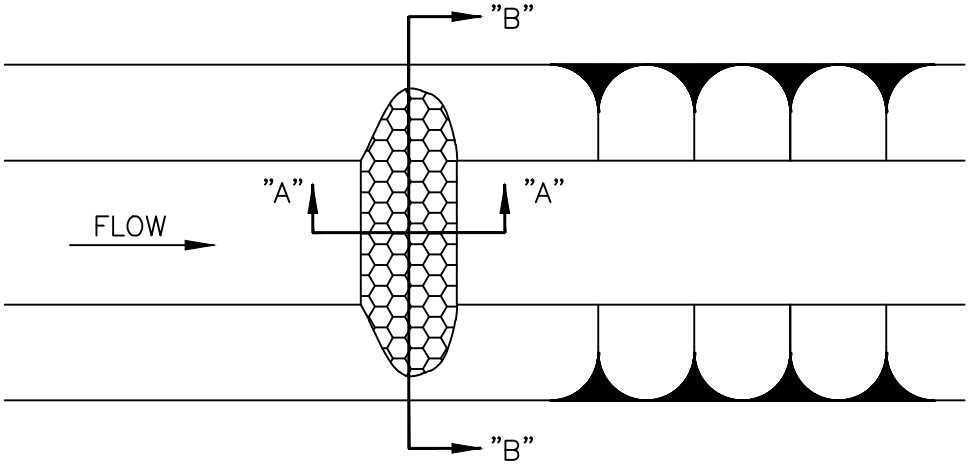

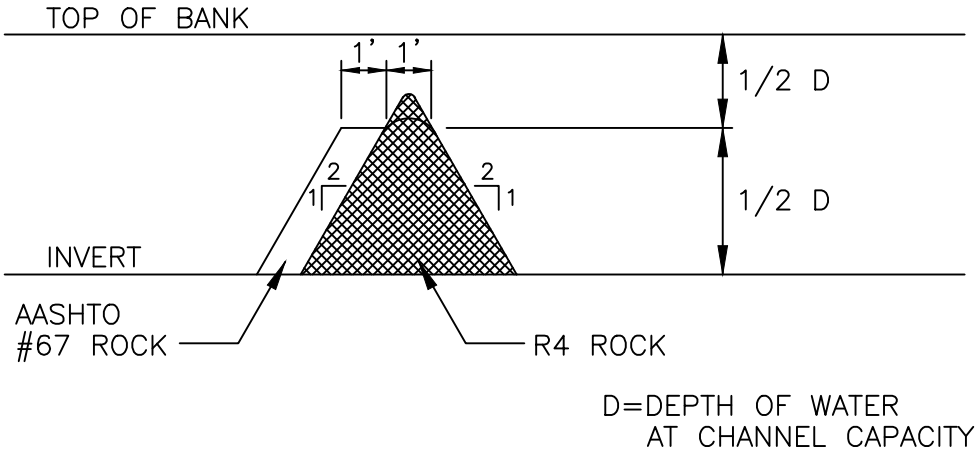

SECTION "A–A"

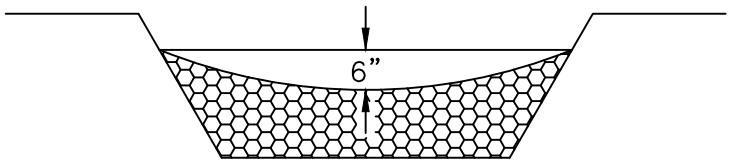

SECTION "B–B"

1. ROCK FILTERS WILL BE CONSTRUCTED WITH AASHTO NUMBER 67 AND R–4 ROCK AS SPECIFIED IN SECTIONS 703.2 AND 850.2 OF PENNDOT'S PUBLICATION 408.
2. FREE STANDING ROCK CHANNEL FILTERS WILL BE CONSTRUCTED TO THE DIMENSIONS SHOWN ABOVE.
3. MAINTENANCE: ROCK FILTERS WILL BE REMOVED WHEN CLOGGED WITH SEDIMENTS. MATERIALS MUST BE WASHED COMPLETELY FREE OF ALL FOREIGN MATERIALS OR NEW ROCK USED TO REBUILD THE FILTER.

national fuel SUPPLY CORPORATION	ENGINEERING DEPT. 1100 STATE STREET P.O. BOX 2081 ERIE, PA. 16512 (814) 871–8676	DRAWN BY: L. A. PHILLIPS FILENAME: NFGSC\BMP17.dwg DATE: 01/10/1997	ROCK CHANNEL FILTER	DRAWING NUMBER: 17

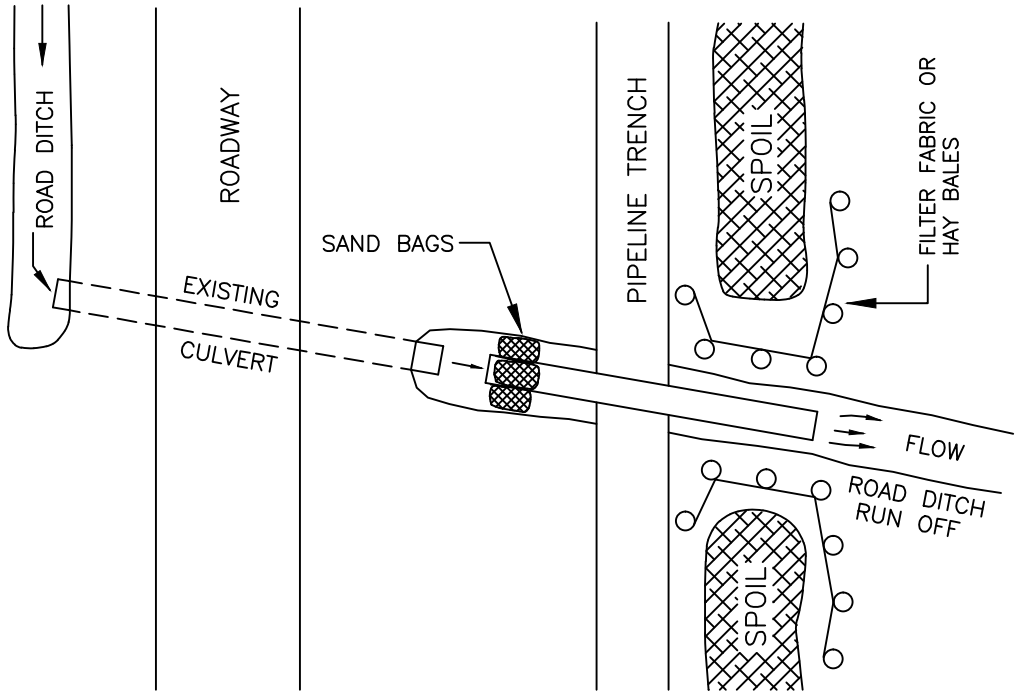

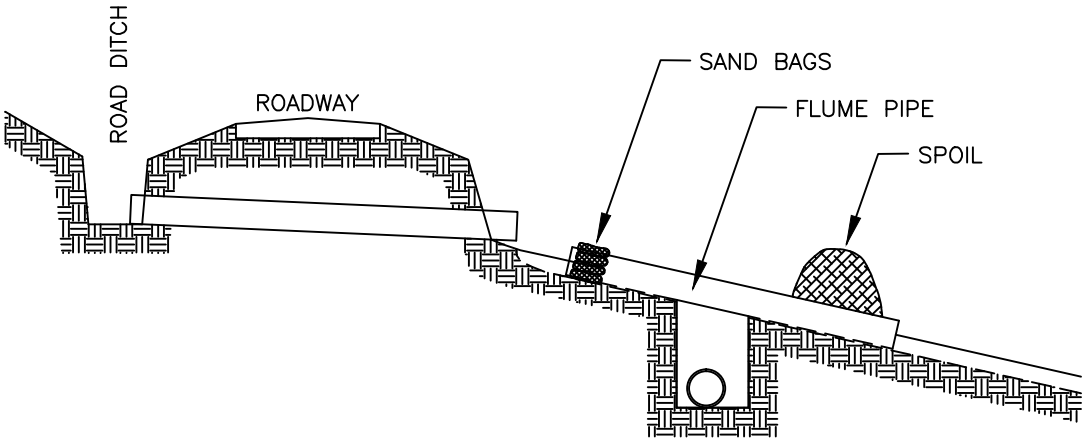

NOTES:

1. INSTALL TEMPORARY CULVERT ACROSS PIPELINE TRENCH AT ROAD CULVERT LOCATIONS WHERE PIPELINE TRENCH IS LOCATED BELOW ROAD SURFACE. AN 8" MINIMUM DIAMETER CULVERT IS TO BE INSTALLED.

2. REMOVE CULVERT WHEN BACK FILLING AND RESTORE ROAD DITCH RUN OFF TO ORIGINAL CONDITION.

national Fuel SUPPLY CORPORATION	ENGINEERING DEPT. 1100 STATE STREET P.O. BOX 2081 ERIE, PA. 16512 (814) 871-8676	DRAWN BY: L. A. PHILLIPS FILENAME: NFGSC\BMP18.dwg LAST REVISION DATE: 09/09/2003	ROAD CULVERT EXTENSION ACROSS PIPELINE TRENCH	DRAWING NUMBER: 18

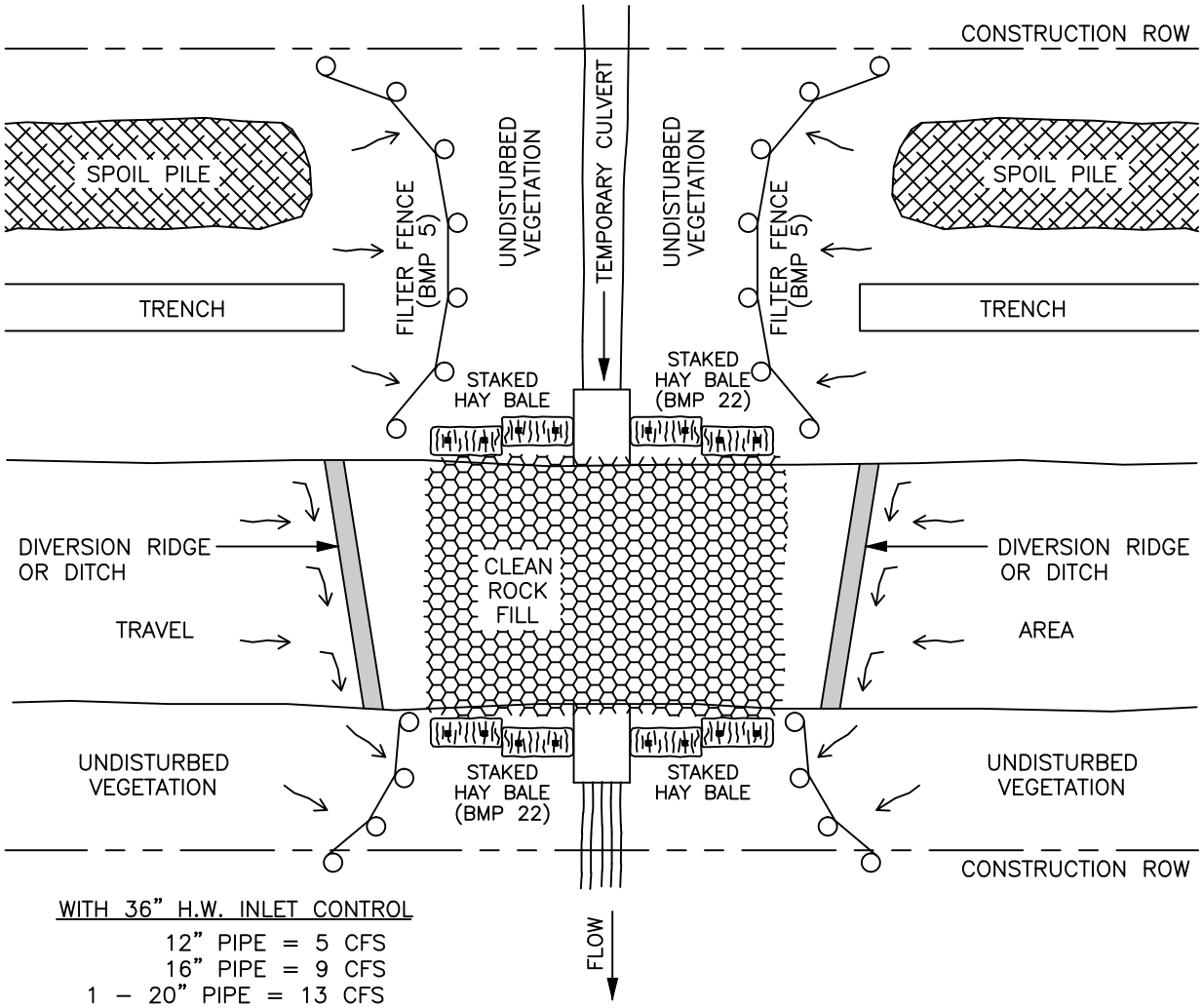

WITH 36" H.W. INLET CONTROL

12" PIPE = 5 CFS
16" PIPE = 9 CFS
1 – 20" PIPE = 13 CFS
2 – 20" PIPE = 26 CFS
3 – 20" PIPE = 39 CFS

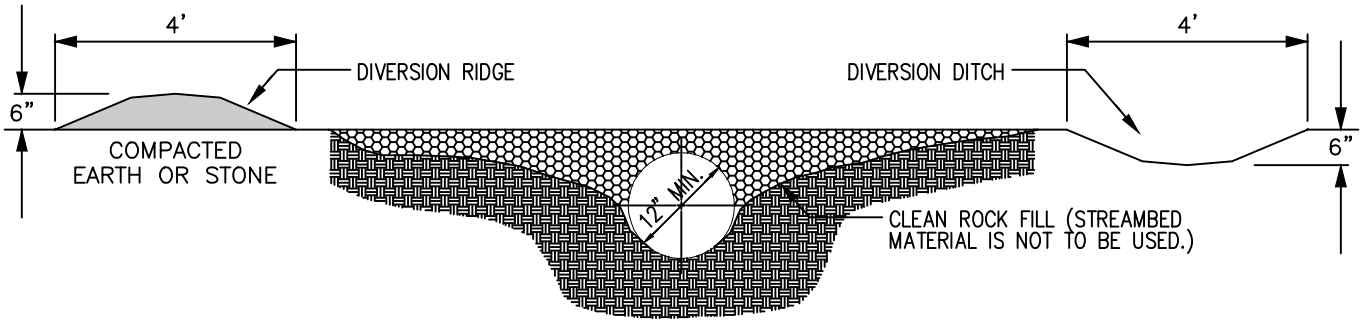

1. TEMPORARY CULVERT SHOULD EXTEND BEYOND TOE OF ROAD.
2. ROADWAY SHOULD BE DEPRESSED OVER CULVERT TO ALLOW FOR OVERFLOW.
3. CLEAN ROCK FILL SHALL BE USED TO GUARD AGAINST EROSION AND SEDIMENTATION. STREAMBED MATERIAL IS NOT TO BE USED.
4. INSTALL FILTER FENCE (BMP 5) ACROSS THE DISTURBED AREAS OF THE R.O.W.
5. INSTALL STAKED HAY BALES (BMP 22) ALONG TRAVEL AREA ON EACH SIDE OF CULVERT OPENING, TO CONTROL MUD FROM CONSTRUCTION TRAFFIC. THESE AREAS ARE TO BE CLEANED PERIODICALLY DURING CONSTRUCTION. **DO NOT INSTALL HAY BALES IN WATERWAY.**
6. DURING FINAL CLEAN UP WHEN CULVERT, CLEAN ROCK FILL, ETC. ARE REMOVED, INSTALL FILTER FENCE ACROSS THE ENTIRE R.O.W. ON BOTH SIDES OF STREAM.
7. LOCATE ALL SPOIL A MINIMUM OF 10 FEET FROM THE WATERS EDGE.

National Fuel SUPPLY CORPORATION	ENGINEERING DEPT. 1100 STATE STREET P.O. BOX 2081 ERIE, PA. 16512 (814) 871-8676	DRAWN BY: DRISCOLL/PHILLIPS FILENAME: EPC\BMP19.dwg LAST REVISION DATE: 06/27/2007	TEMPORARY CULVERT WITH CLEAN ROCK FILL	DRAWING NUMBER: 19

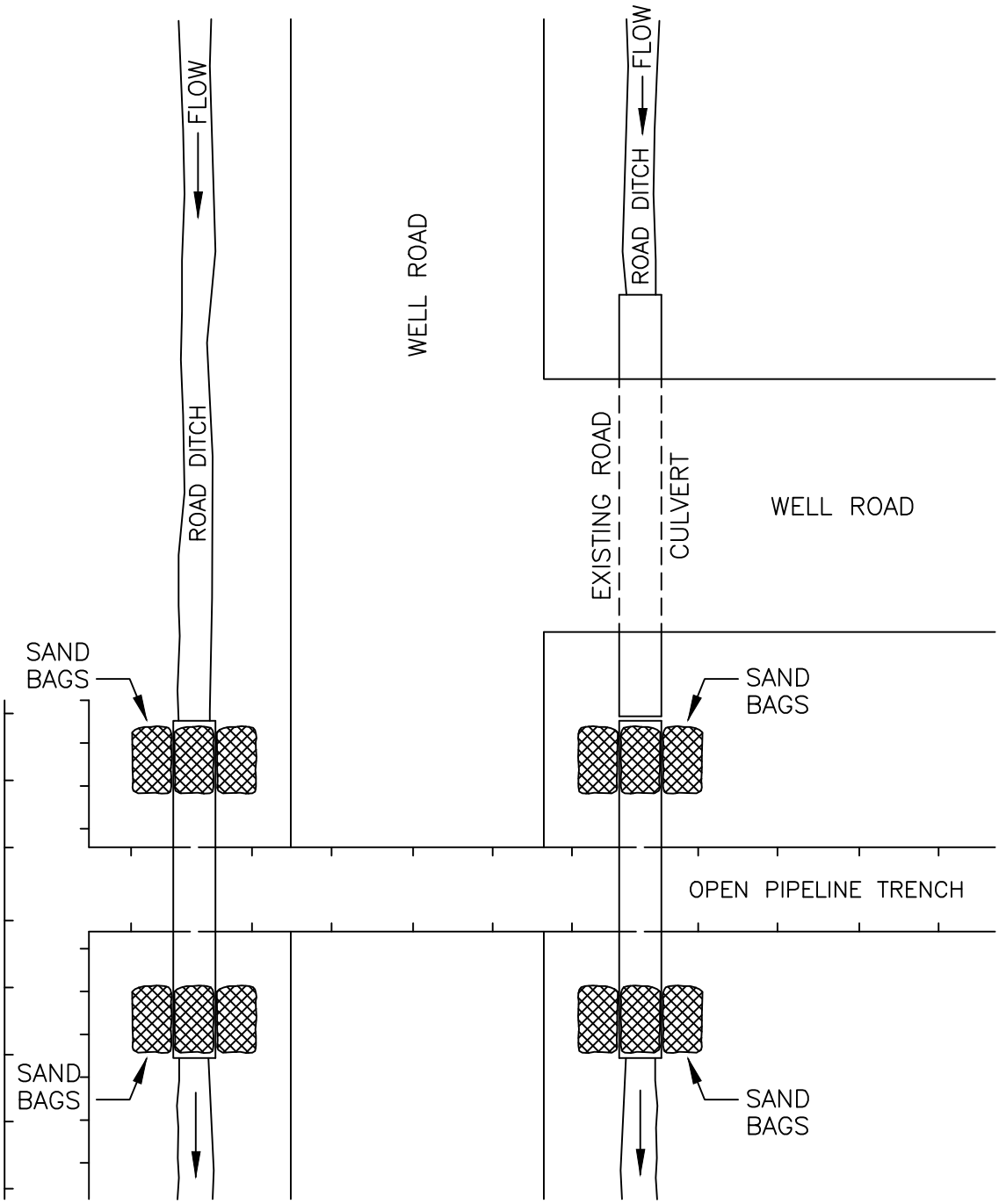

NOTES:

1. INSTALL TEMPORARY CULVERT IN ROAD DITCH, ACROSS OPEN PIPELINE TRENCH. AN 8" MINIMUM DIAMETER CULVERT IS TO BE INSTALLED.

2. REMOVE CULVERT WHEN BACK FILLING AND RESTORE ROAD DITCH TO ORIGINAL CONDITION.

National Fuel SUPPLY CORPORATION	ENGINEERING DEPT. 1100 STATE STREET P.O. BOX 2081 ERIE, PA. 16512 (814) 871-8676	DRAWN BY: L. A. PHILLIPS FILENAME: NFGSC\BMP20.dwg DATE: 01/10/1997	TEMPORARY CULVERT ACROSS OPEN TRENCH	DRAWING NUMBER: 20

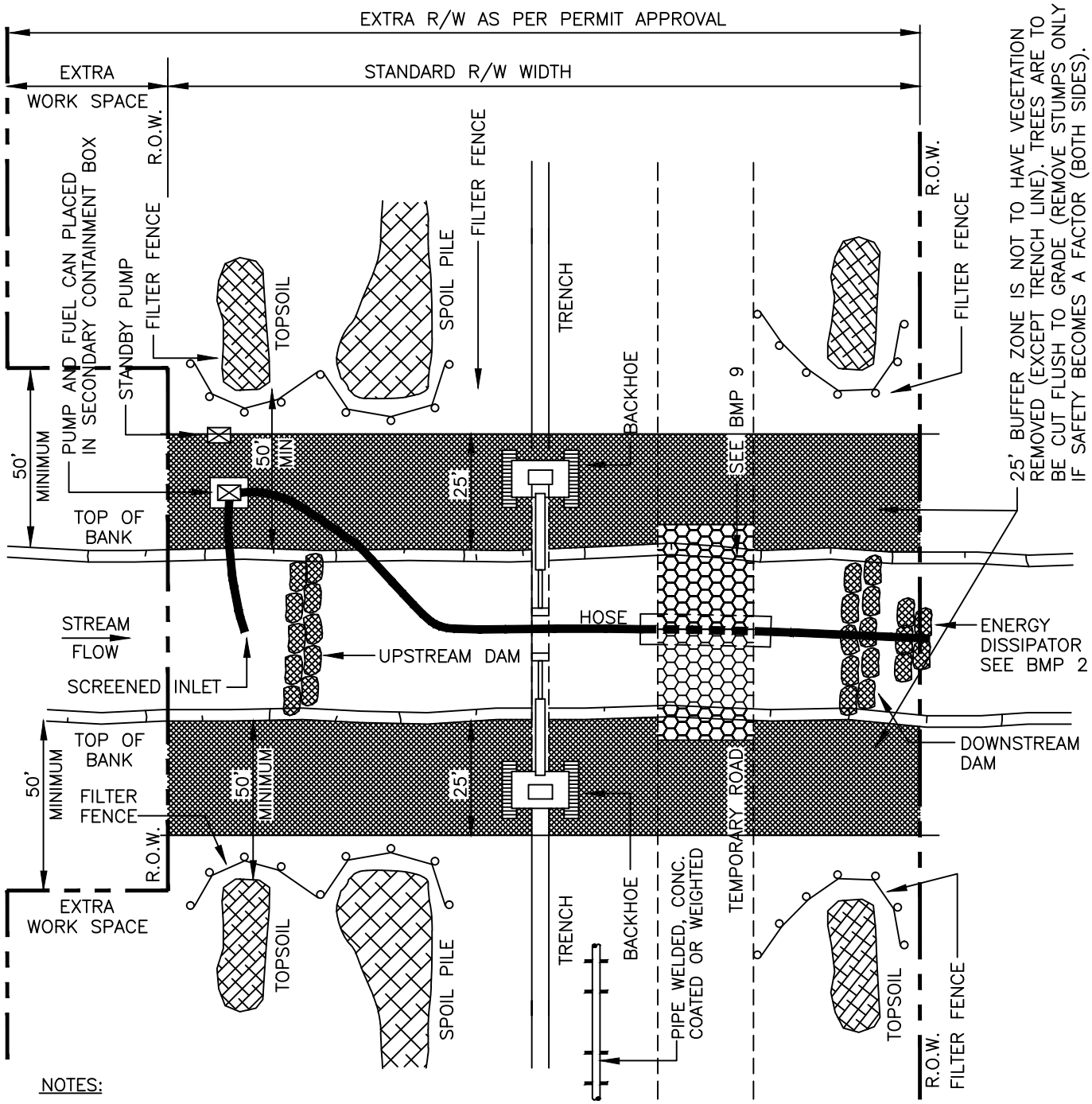

NOTES:

1. USE DAM AND PUMP METHOD ON NARROW WATERCOURSES WITH LIMITED STREAM FLOW TO PREVENT SEDIMENTATION AND INTERRUPTION OF STREAM FLOW DURING CROSSING CONSTRUCTION. IF FISH PASSAGE IS A CONCERN, THIS METHOD IS NOT APPROPRIATE.
2. SCHEDULE CONSTRUCTION DURING LOW FLOW PERIOD.
3. SET UP PUMP AND HOSE AS SHOWN, OR USE OTHER PRACTICAL ALTERNATIVES. PUMP SHOULD HAVE TWICE THE PUMPING CAPACITY OF ANTICIPATED FLOW. HAVE STANDBY PUMP ON SITE.
4. INSTALL DAMS COMPOSED OF SANDBAGS OR CLEAN GRAVEL WITH PLASTIC LINER TO KEEP STREAM BED DRY.
5. EXCAVATE TRENCH AND LOWER IN PIPE UNDER HOSE. MOVE HOSE AS REQUIRED OR DISCONNECT IF TEMPORARY FLOW BLOCKAGE IS ACCEPTABLE. BACKFILL TRENCH.
6. DISMANTLE DOWNSTREAM DAM, THEN UPSTREAM DAM. KEEP PUMP RUNNING TO MAINTAIN FLOW.
7. MONITOR DAM AND PUMP FOR PROPER OPERATION THROUGHOUT THE CROSSING INSTALLATION.
8. SPOIL REMOVED DURING TRENCH CONSTRUCTION OF CROSSING MAY BE PLACED 10 FT BACK FROM ORDINARY HIGH WATER MARK PROVIDED E&S CONTROLS ARE INSTALLED.
9. UNDISTURBED VEGETATION BUFFER SHALL BE 25 FT OR TO EDGE OF EXISTING NON–NATIVE VEGETATION WHERE THAT DISTANCE IS <25 FT.

National Fuel SUPPLY CORPORATION	ENGINEERING DEPT. 1100 STATE STREET P.O. BOX 2081 ERIE, PA. 16512 (814) 871–8676	DRAWN BY: L. A. PHILLIPS FILENAME: NFGSC\BMP21.dwg LAST REVISION DATE: 04/29/2008	DAM AND PUMP - STREAM CROSSING	DRAWING NUMBER: 21

DESIGN RESTRICTIONS:

1. THE FORMATION OF CONCENTRATED FLOWS ON THE UPSLOPE DRAINAGE AREA IS NOT PERMITTED. IF CONCENTRATED FLOWS DO DEVELOP, DIRECT STABILIZATION MEASURES MUST BE EMPLOYED TO PREVENT SUCH CONDITIONS.
2. STRAW BALE BARRIERS MAY NOT BE PLACED IN ANY AREA OF CONCENTRATED FLOWS SUCH AS STREAMS, CHANNELS, DITCHES, SWALES, ETC.
3. STRAW BALE BARRIERS WILL NOT BE USED IN AREAS WHERE ROCK PREVENTS THE FULL AND UNIFORM DEPTH ANCHORING OF THE BARRIER.
4. STRAW BALE BARRIERS WILL BE REPLACED EVERY THREE (3) MONTHS OR MORE OFTEN IF THE BALES DETERIORATE AND BECOME INEFFECTIVE.

INSTALLATION:

1. THE ANCHORING TRENCH WILL BE CONSTRUCTED TO THE REQUIRED GRADE AND DEPTH AS SHOWN.
2. SUPPORT STAKES WILL BE DRIVEN TO THE REQUIRED DEPTH AS SHOWN.
3. THE ANCHORING TRENCH WILL BE BACKFILLED AND COMPACTED TO A DENSITY EQUAL TO UNDISTURBED SITE SOILS.

1. EXCAVATE ANCHORING TRENCH

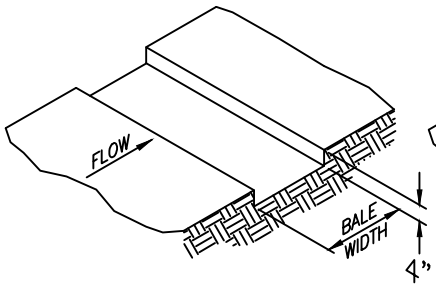

2. PLACE AND STAKE STRAW BALES

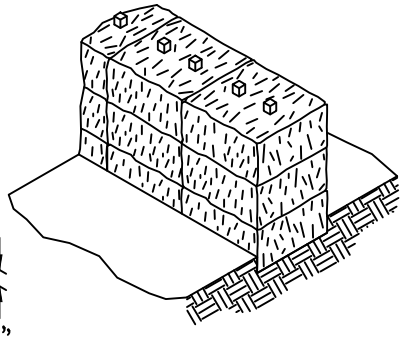

3. WEDGE LOOSE STRAW BETWEEN BALES

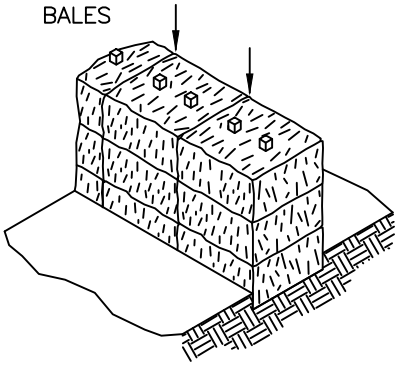

4. BACKFILL AND COMPACT THE EXCAVATED SOIL (ANCHOR TOE)

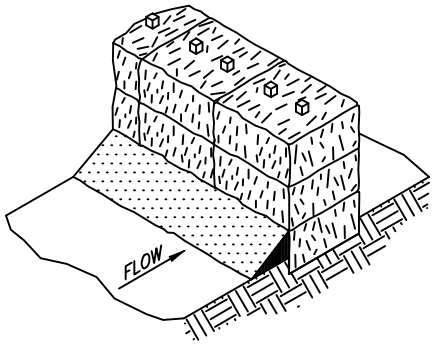

CROSS–SECTION OF STRAW BALE BARRIER

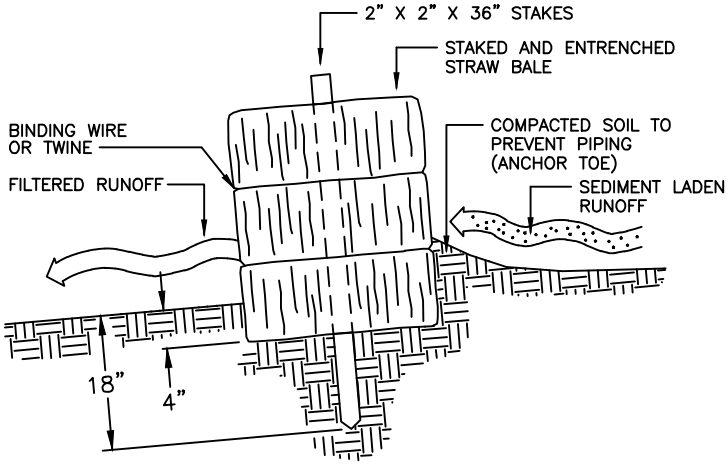

MAINTENANCE:

1. THE BARRIER WILL BE INSPECTED AFTER EVERY RUNOFF EVENT. DISLODGED BALES SHOULD BE RESET, STAKED AND BACKFILLED TO THE REQUIREMENTS LISTED UNDER "INSTALLATION". ALL CLOGGED OR INOPERATIVE BALES WILL BE REPLACED.
2. ACCUMULATED SEDIMENTS WILL BE REMOVED AS REQUIRED AND IN ALL CASES WHERE UNIFORM ACCUMULATIONS REACH 1/3 THE ABOVE GROUND HEIGHT OF THE BARRIER.
3. ALL UNDERCUTTING OR EROSION OF THE ANCHOR TOE WILL BE REPAIRED IMMEDIATELY WITH COMPACTED BACKFILL MATERIALS.

National Fuel SUPPLY CORPORATION	ENGINEERING DEPT. 1100 STATE STREET P.O. BOX 2081 ERIE, PA. 16512 (814) 871–8676	DRAWN BY: L. A. PHILLIPS FILENAME: NFGSC\BMP22.dwg DATE: 03/10/2000	STRAW BALE INSTALLATION	DRAWING NUMBER: 22

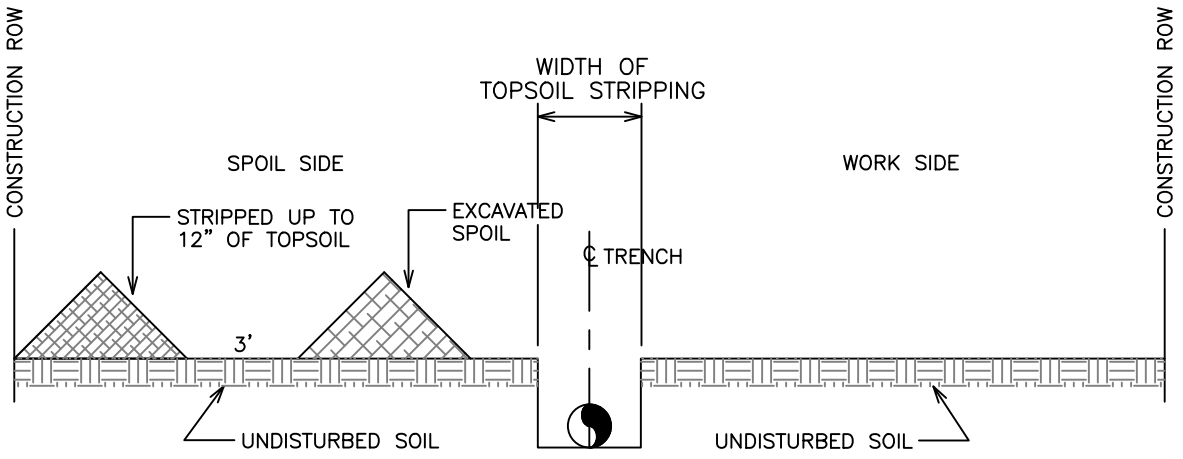

DITCH LINE TOPSOIL STRIPPING

ALSO USED IN NON-SATURATED WETLANDS

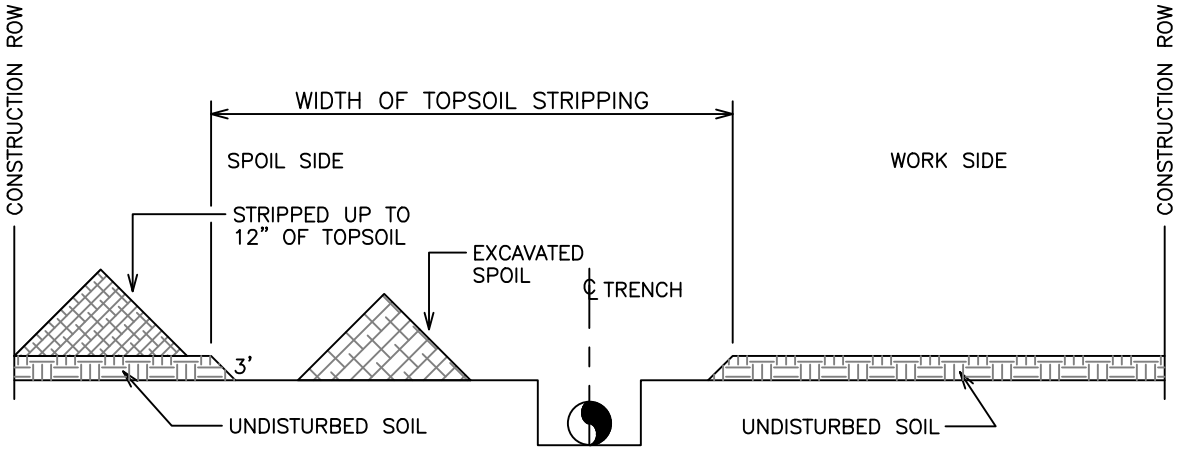

DITCH PLUS SPOIL SIDE SEGREGATION

NOTES:

1. ALLOW FOR A 3' SEPARATION BETWEEN THE TOPSOIL PILE AND THE TRENCH SPOIL.
2. RETURN TRENCH SPOIL TO TRENCH AND COMPACT. FEATHER OUT EXCESS SPOIL OVER STRIPPED AREA LEAVING A LOW CROWN CENTERED OVER THE TRENCH. ALLEVIATE COMPACTION OF SUBSOILS OVER THE STRIPPED AREA.
3. RETURN TOPSOIL EVENLY OVER THE STRIPPED AREA AFTER TRENCH HAS SUFFICIENTLY SETTLED OR HAS BEEN COMPACTED.
4. ALLEVIATE COMPACTION OF TOPSOIL OVER ENTIRE RIGHT-OF-WAY.
5. SEGREGATED TOPSOIL MAY NOT BE USED FOR PADDING THE PIPE.

national fuel SUPPLY CORPORATION	ENGINEERING DEPT. 1100 STATE STREET P.O. BOX 2081 ERIE, PA. 16512 (814) 871-8676	DRAWN BY: L. A. PHILLIPS FILENAME: NFGSC\BMP23.dwg LAST REVISION DATE: 03/22/2006	TOPSOIL SEGREGATION	DRAWING NUMBER: 23

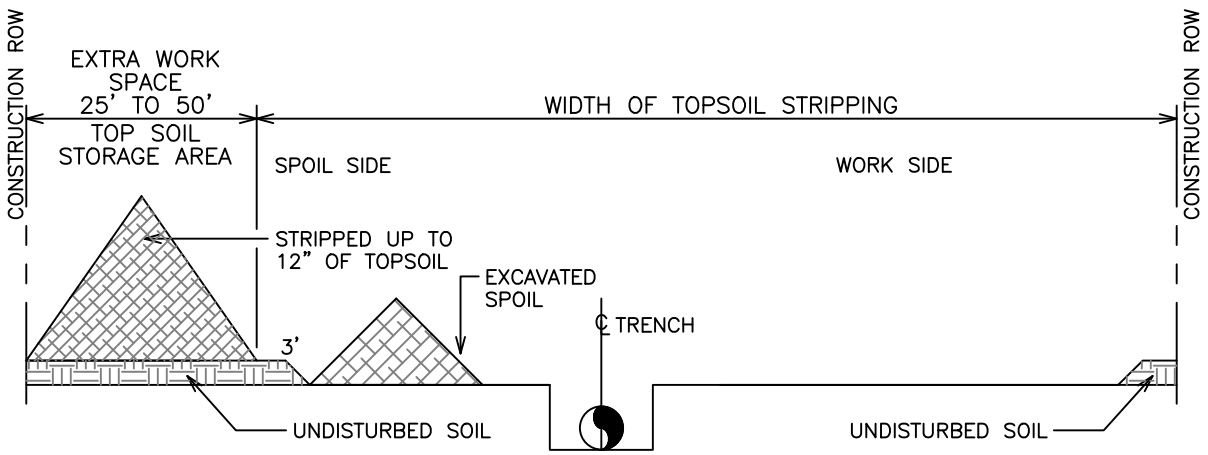

FULL RIGHT-OF-WAY TOPSOIL STRIPPING – A

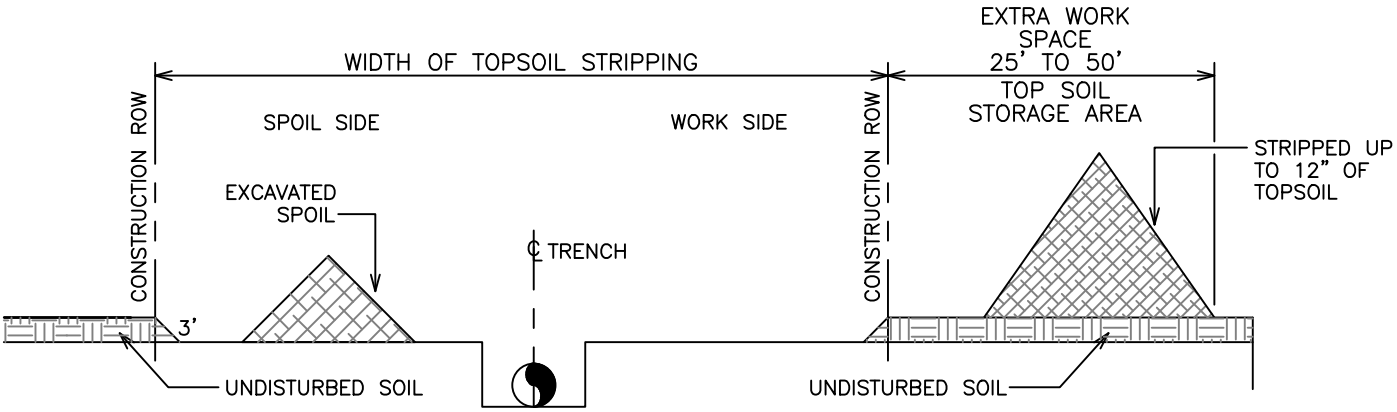

FULL RIGHT-OF-WAY TOPSOIL STRIPPING – B

NOTES:

1. ALLOW FOR A 3' SEPARATION BETWEEN THE TOPSOIL PILE AND THE TRENCH SPOIL.
2. RETURN TRENCH SPOIL TO TRENCH AND COMPACT. FEATHER OUT EXCESS SPOIL OVER STRIPPED AREA LEAVING A LOW CROWN CENTERED OVER THE TRENCH. ALLEVIATE COMPACTION OF SUBSOILS OVER THE STRIPPED AREA.
3. RETURN TOPSOIL EVENLY OVER THE STRIPPED AREA AFTER TRENCH HAS SUFFICIENTLY SETTLED OR HAS BEEN COMPACTED.
4. ALLEVIATE COMPACTION OF TOPSOIL OVER ENTIRE RIGHT-OF-WAY.
5. SEGREGATED TOPSOIL MAY NOT BE USED FOR PADDING THE PIPE.

national Fuel SUPPLY CORPORATION	ENGINEERING DEPT. 1100 STATE STREET P.O. BOX 2081 ERIE, PA. 16512 (814) 871-8676	DRAWN BY: L. A. PHILLIPS FILENAME: NFGSC\BMP23a.dwg LAST REVISION DATE: 03/22/2006	TOPSOIL SEGREGATION	DRAWING NUMBER: 23A

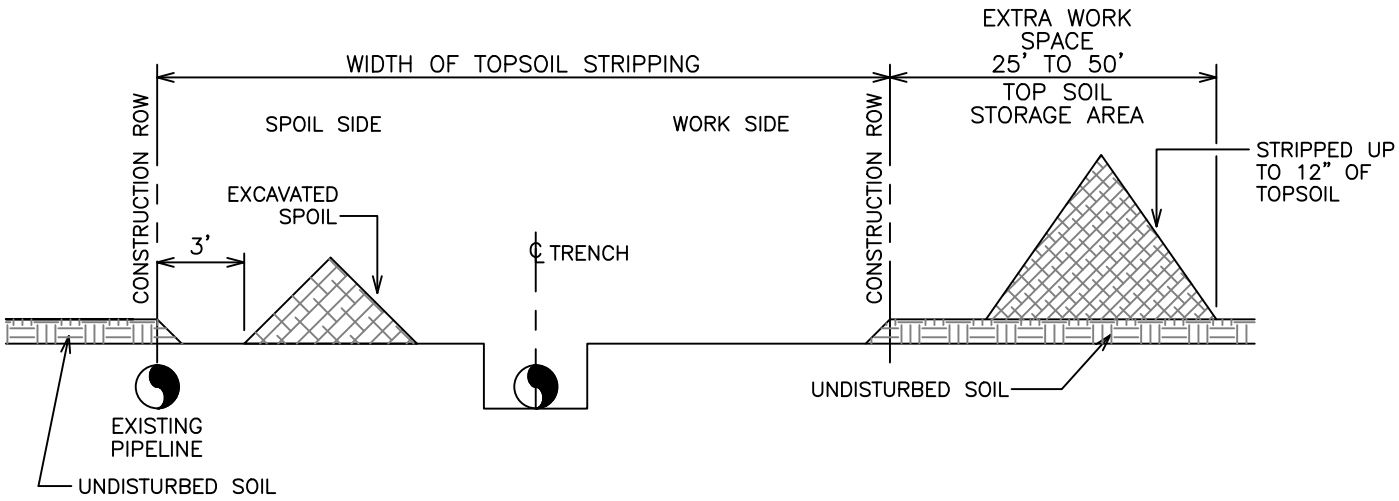

FULL RIGHT-OF-WAY TOPSOIL STRIPPING – PARALLELING PIPELINES

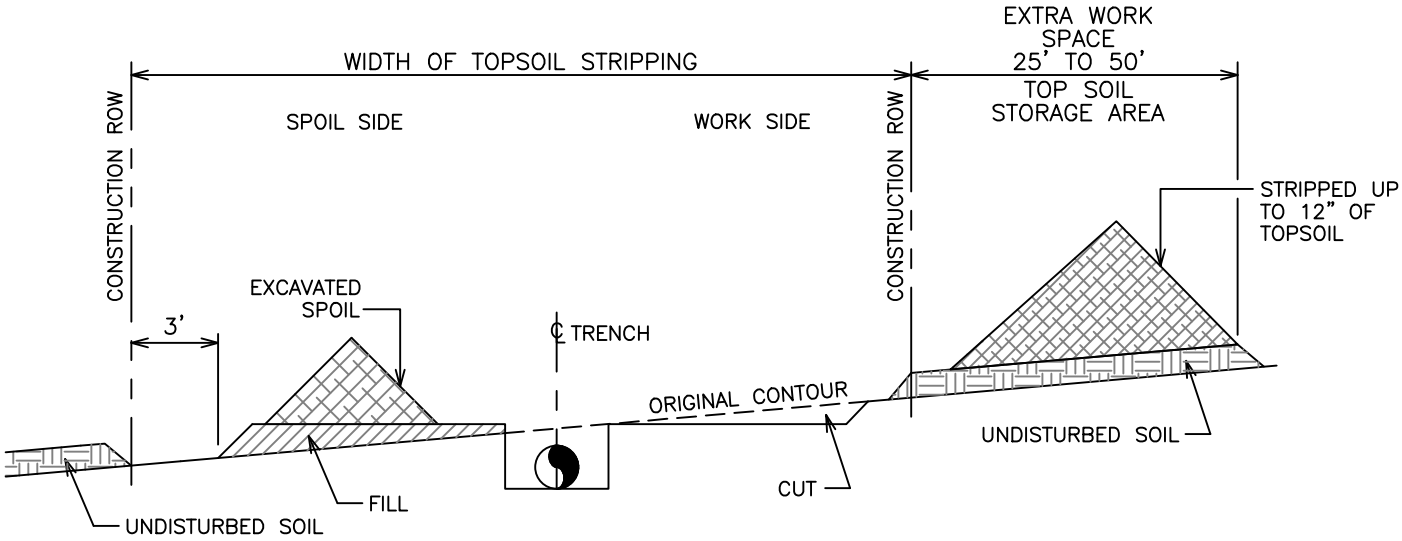

FULL RIGHT-OF-WAY TOPSOIL STRIPPING – SIDE SLOPES

NOTES:

1. ALLOW FOR A 3' SEPARATION BETWEEN THE TOPSOIL PILE AND THE TRENCH SPOIL.
2. RETURN TRENCH SPOIL TO TRENCH AND COMPACT. FEATHER OUT EXCESS SPOIL OVER STRIPPED AREA LEAVING A LOW CROWN CENTERED OVER THE TRENCH. ALLEVIATE COMPACTION OF SUBSOILS OVER THE STRIPPED AREA.
3. RETURN TOPSOIL EVENLY OVER THE STRIPPED AREA AFTER TRENCH HAS SUFFICIENTLY SETTLED OR HAS BEEN COMPACTED.
4. ALLEVIATE COMPACTION OF TOPSOIL OVER ENTIRE RIGHT-OF-WAY.
5. SEGREGATED TOPSOIL MAY NOT BE USED FOR PADDING THE PIPE.

National Fuel SUPPLY CORPORATION	ENGINEERING DEPT. 1100 STATE STREET P.O. BOX 2081 ERIE, PA. 16512 (814) 871-8676	DRAWN BY: L. A. PHILLIPS FILENAME: NFGSC\BMP23b.dwg LAST REVISION DATE: 03/22/2006	TOPSOIL SEGREGATION	DRAWING NUMBER: 23B

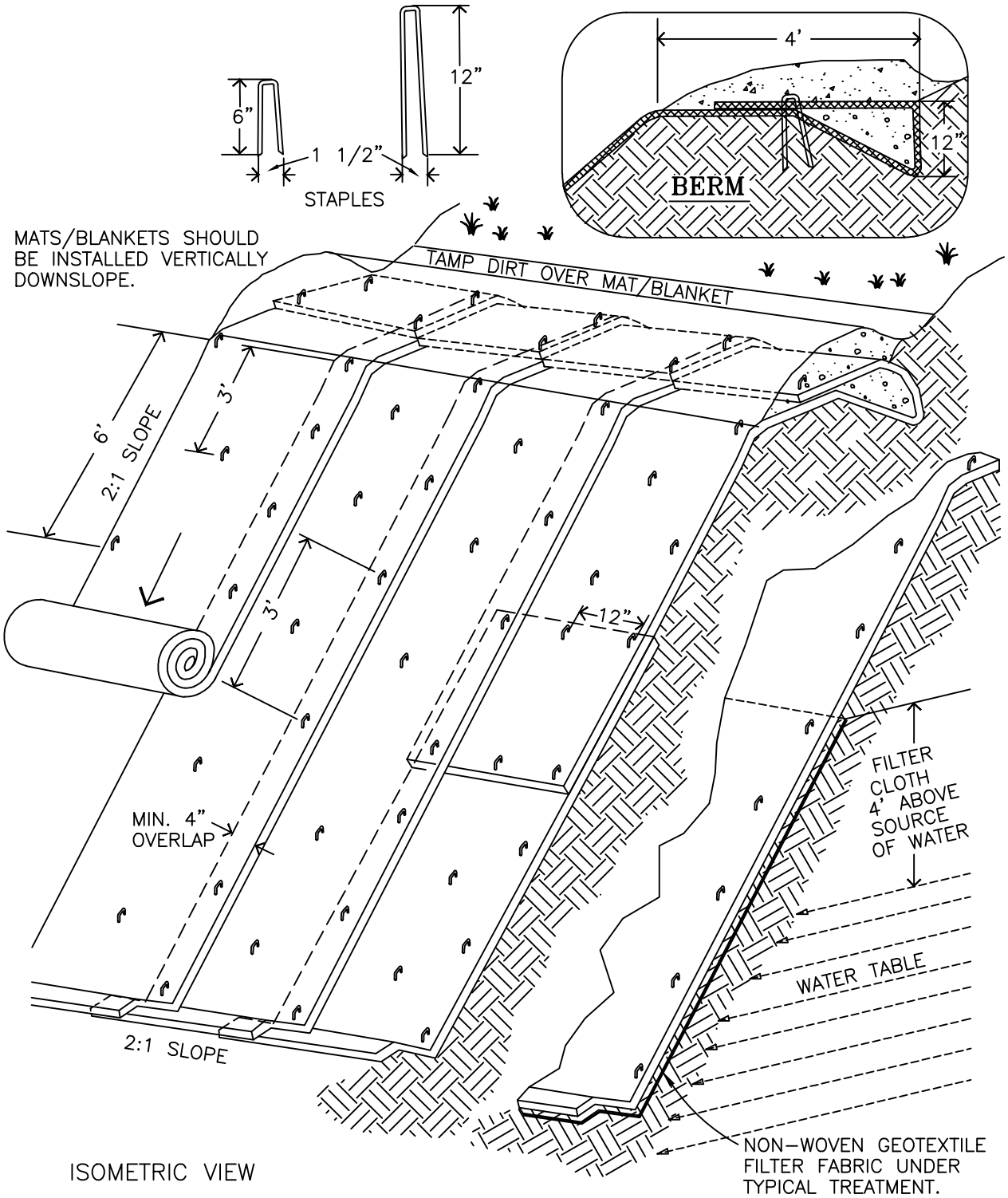

ISOMETRIC VIEW

TYPICAL SLOPE SOIL STABLIZATION

NOTES:

1. SLOPE SURFACE SHALL BE FREE OF ROCKS, CLODS, STICKS AND GRASS. MATS/BLANKETS SHALL HAVE GOOD SOIL CONTACT.

2. LAY BLANKETS LOOSELY AND STAKE OR STAPLE TO MAINTAIN DIRECT CONTACT WITH THE SOIL. DO NOT STRETCH.

3. SEE DRAWING NO. 24A FOR INSTALLATION SPECIFICATIONS.

© 1994 JOHN McCULLAH

National Fuel SUPPLY CORPORATION	ENGINEERING DEPT. 1100 STATE STREET P.O. BOX 2081 ERIE, PA. 16512 (814) 871-8676	MODIFIED BY: L. A. PHILLIPS FILENAME: NFGSC\BMP24.dwg DATE: 01/13/1997	EROSION BLANKETS SLOPE INSTALLATION	DRAWING NUMBER: 24

CONSTRUCTION SPECIFICATIONS:

SITE PREPARATION

1. PROPER SITE PREPARATION IS ESSENTIAL TO ENSURE COMPLETE CONTACT OF THE PROTECTION MATTING WITH THE SOIL.
2. GRADE AND SHAPE AREA OF INSTALLATION.
3. REMOVE ALL ROCKS, CLODS, VEGETATIVE OR OTHER OBSTRUCTIONS SO THAT THE INSTALLED BLANKETS, OR MATS WILL HAVE DIRECT CONTACT WITH THE SOIL.
4. PREPARE SEEDBED BY LOOSENING 2"–3" OF TOPSOIL ABOVE FINAL GRADE.
5. INCORPORATE AMENDMENTS, SUCH AS LIME AND FERTILIZER, INTO SOIL ACCORDING TO SOIL TEST AND THE SEEDING PLAN.

SEEDING

SEED AREA BEFORE BLANKET INSTALLATION FOR EROSION CONTROL AND RE–VEGETATION OR SEED AFTER MAT INSTALLATION FOR TURF REINFORCEMENT. WHEN SEEDING PRIOR TO BLANKET INSTALLATION, ALL CHECK SLOTS AND OTHER AREAS DISTURBED DURING INSTALLATION MUST BE RESEEDED. WHERE SOIL FILLING IS SPECIFIED, SEED THE MATTING AND THE ENTIRE DISTURBED AREA AFTER INSTALLATION AND PRIOR TO FILLING THE MAT WITH SOIL.

ANCHORING

U–SHAPED WIRE STAPLES, METAL GEOTEXTILE STAKE PINS OR TRIANGULAR WOODEN STAKES CAN BE USED TO ANCHOR MATS TO THE GROUND SURFACE. WIRE STAPLES SHOULD BE A MINIMUM OF 8 GAUGE. METAL STAKE PINS SHOULD BE 3/16" DIAMETER STEEL WITH A 1 1/2" STEEL WASHER AT THE HEAD OF THE PIN. WIRE STAPLES AND METAL STAKE SHOULD BE DRIVEN FLUSH TO THE SOIL SURFACE. WOODEN STAKES SHOULD BE 3" X 1 1/2" TRIANGULAR WOODEN SURVEY STAKES. TWO INCHES OF WOOD STAKING SHOULD REMAIN ABOVE THE SOIL SURFACE. ALL ANCHORS SHOULD BE 8"–18" LONG AND HAVE SUFFICIENT GROUND PENETRATION TO RESIST PULLOUT. LONGER ANCHORS MAY BE REQUIRED FOR LOOSE SOILS.

INSTALLATION ON SLOPES

1. BEGIN AT THE TOP OF THE SLOPE AND ANCHOR ITS BLANKET IN A 6" DEEP X 6" WIDE TRENCH. BACKFILL TRENCH AND TAMP EARTH FIRMLY.
2. UNROLL BLANKET DOWNSLOPE IN THE DIRECTION OF THE WATER FLOW.
3. THE EDGES OF ADJACENT PARALLEL ROLLS MUST BE OVERLAPPED 2" TO 3" AND BE STAPLED EVERY 3 FEET.
4. WHEN BLANKETS MUST BE SPLICED, PLACE BLANKETS END OVER END (SHINGLE STYLE) WITH 6" OVERLAP. STAPLE THROUGH OVERLAPPED AREA, APPROXIMATELY 12" APART.
5. BLANKETS SHALL BE STAPLED SUFFICIENTLY TO ANCHOR BLANKET AND MAINTAIN CONTACT WITH THE SOIL. STAPLES SHALL BE PLACED DOWN THE CENTER AND STAGGERED WITH THE STAPLES PLACED ALONG THE EDGES STEEP SLOPES, 1:1 TO 2:1, REQUIRE 2 STAPLES PER SQUARE YARD. MODERATE SLOPES, 2:1 TO 3:1, REQUIRE 1 1/2 STAPLES PER SQUARE YARD (1 STAPLE 3' O.C.). GENTLE SLOPES REQUIRE 1 STAPLE PERSQUARE YARD.

SOIL FILLING IF SPECIFIED FOR TURF REINFORCEMENT.

1. AFTER SEEDING, SPREAD AND LIGHTLY RAKE 1/2" – 3/4" OF FINE TOPSOIL INTO THE MAT APERTURES TO COMPLETELY FILL MAT THICKNESS.
2. USE BACKSIDE OF RAKE OR OTHER FLAT IMPLEMENT.
3. SPREAD TOPSOIL USING LIGHTWEIGHT LOADER, BACKHOE, OR OTHER POWER EQUIPMENT. AVOID SHARP TURNS WITH EQUIPMENT.
4. DO NOT DRIVE TRACKED OR HEAVY EQUIPMENT OVER MAT.
5. AVOID ANY TRAFFIC OVER MATTING IF LOOSE OR WET SOIL CONDITIONS EXIST.
6. USE SHOVELS, RAKES OR BROOMS FOR FINE GRADING AND TOUCH UP.
7. SMOOTH OUT SOIL FILLING JUST EXPOSING TOP NETTING OF MATRIX.

INSPECTION AND MAINTENANCE

1. ALL BLANKET AND MATS SHOULD BE INSPECTEDPERIODICALLY FOLLOWING INSTALLATION.
2. INSPECT INSTALLATION AFTER SIGNIFICANT RAINSTORMS TO CHECK FOR EROSION AND UNDERMINING. ANY FAILURE SHOULD BE REPAIRED IMMEDIATELY.
3. IF WASHOUT OR BREAKAGE OCCURS, RE–INSTALL THE MATERIAL AFTER REPAIRING THE DAMAGE TO THE SLOPE OR DRAINAGEWAY.

© 1994 JOHN McCULLAH

National Fuel SUPPLY CORPORATION	ENGINEERING DEPT. 1100 STATE STREET P.O. BOX 2081 ERIE, PA. 16512 (814) 871–8676	MODIFIED BY: L. A. PHILLIPS FILENAME: NFGSC\BMP24A.dwg DATE: 01/13/1997	SPECIFICATIONS EROSION BLANKETS SLOPE INSTALLATION	DRAWING NUMBER: 24A

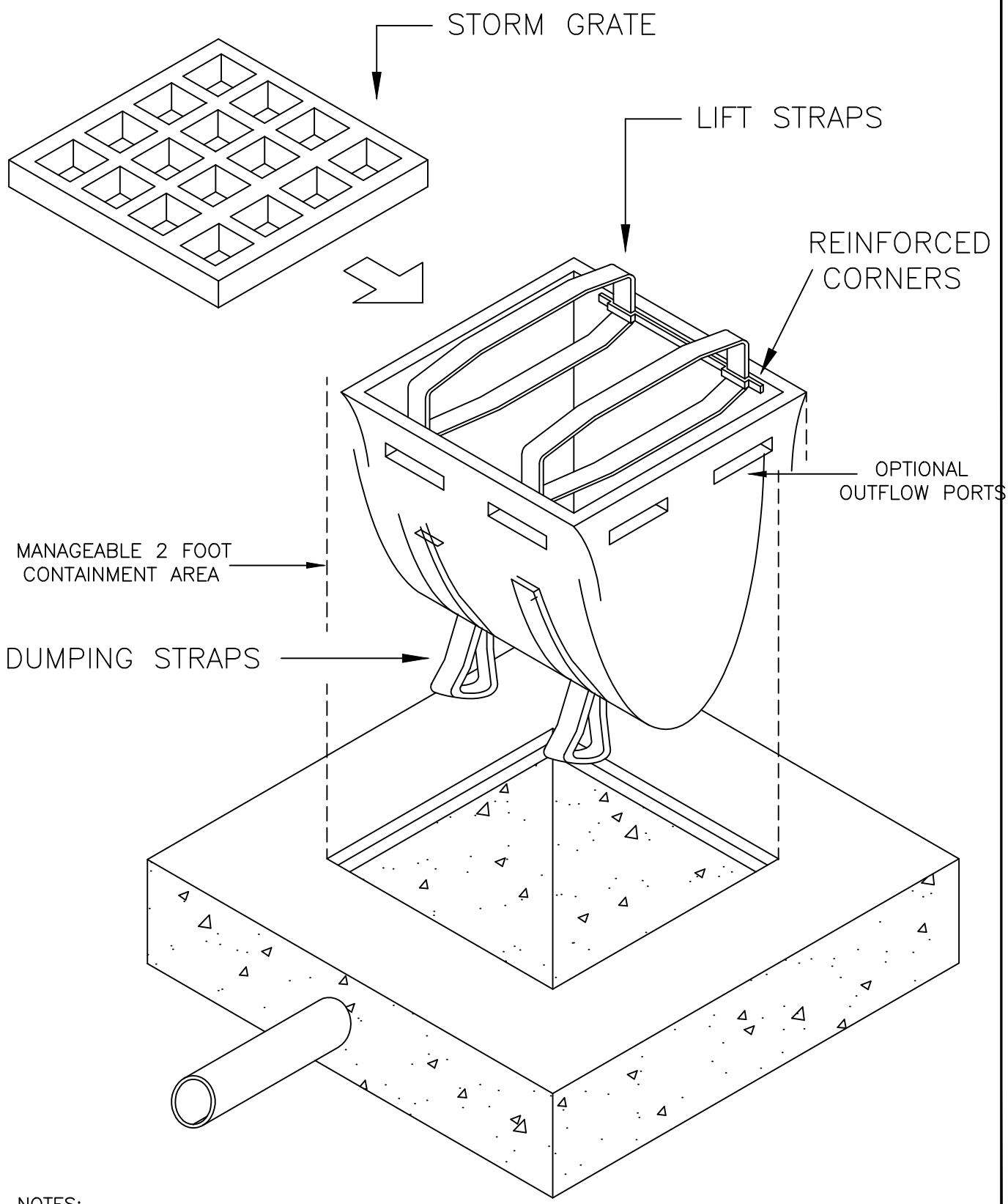

NOTES:

1. CATCH BASIN SEDIMANT SACK IS TO BE USED FOR SMALL, NEARLY LEVEL DRAINAGE AREAS. (LESS THAN 5%)

©1994 JOHN McCULLAH

national Fuel SUPPLY CORPORATION	ENGINEERING DEPT. 1100 STATE STREET P.O. BOX 2081 ERIE, PA. 16512 (814) 871-8676	MODIFIED BY: R. J. PFISTER FILENAME: NFGSC\BMP25.dwg DATE: 03/05/2008	CATCH BASIN SEDIMENT SACK	DRAWING NUMBER: 25

TYPICAL ANODE INSTALLATION

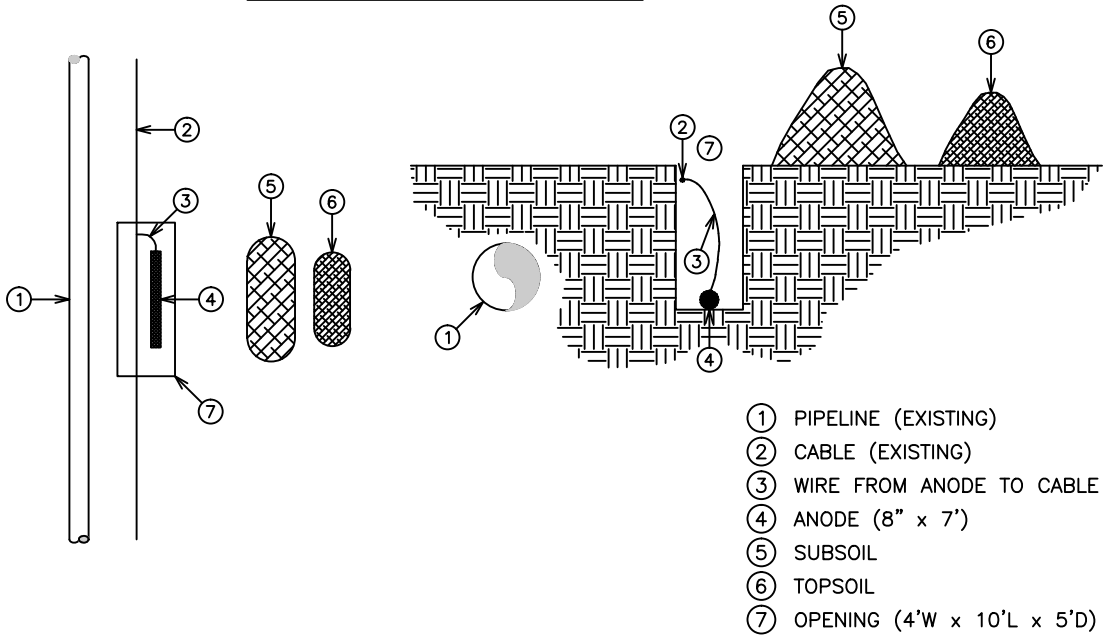

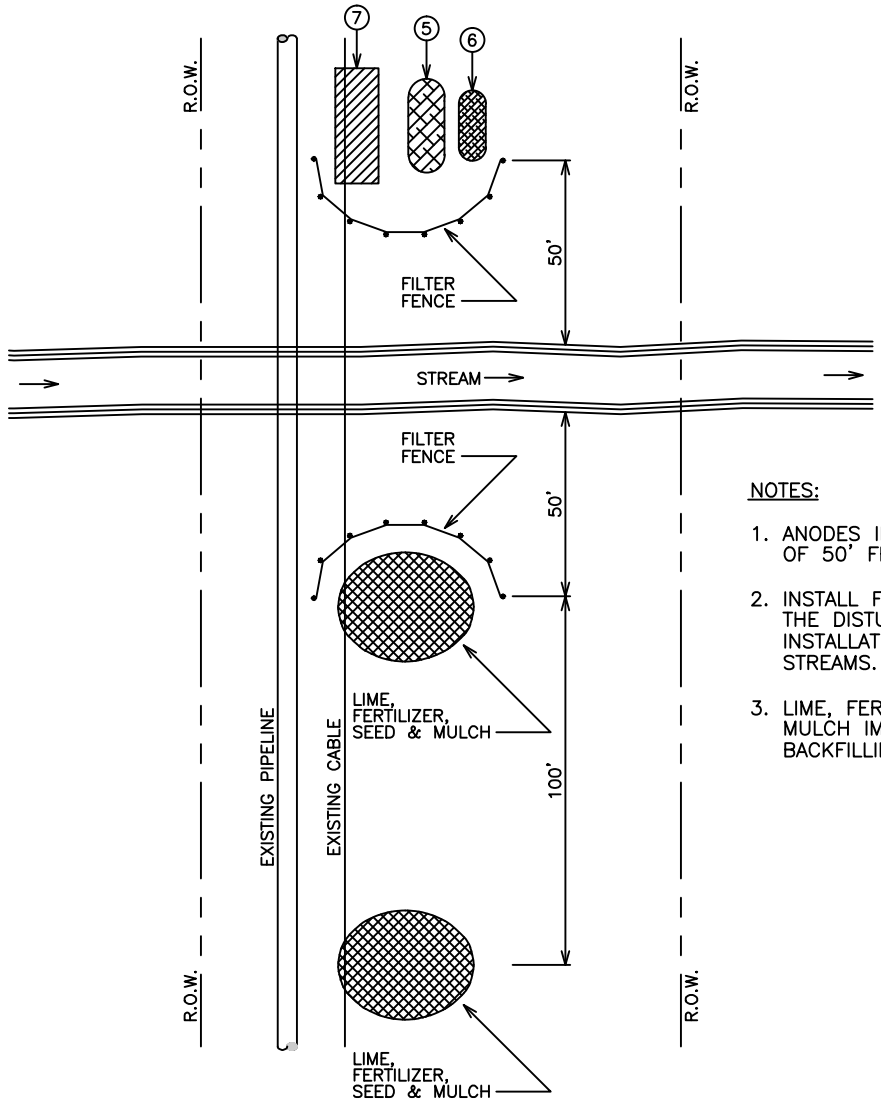

NOTES:

1. ANODES INSTALLED A MINIMUM OF 50' FROM EDGE OF WATER.
2. INSTALL FILTER FENCE ACROSS THE DISTURBED AREAS AT ANODE INSTALLATIONS ADJACENT TO STREAMS.
3. LIME, FERTILIZE, SEED AND MULCH IMMEDIATELY AFTER BACKFILLING.

national Fuel SUPPLY CORPORATION	ENGINEERING DEPT. 1100 STATE STREET P.O. BOX 2081 ERIE, PA. 16512 (814) 871-8676	DRAWN BY: MCCREA/PHILLIPS FILENAME: NFGSC\BMP26.dwg DATE: 01/16/1998	CATHODIC PROTECTION ANODE INSTALLATION	DRAWING NUMBER: 26

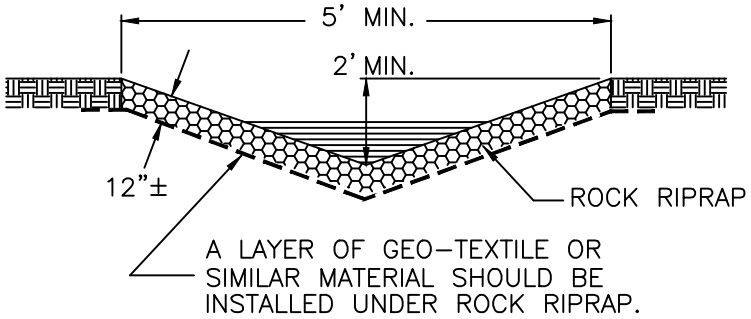

VELOCITY = 8.7'/SEC.
Q = 43 CFS

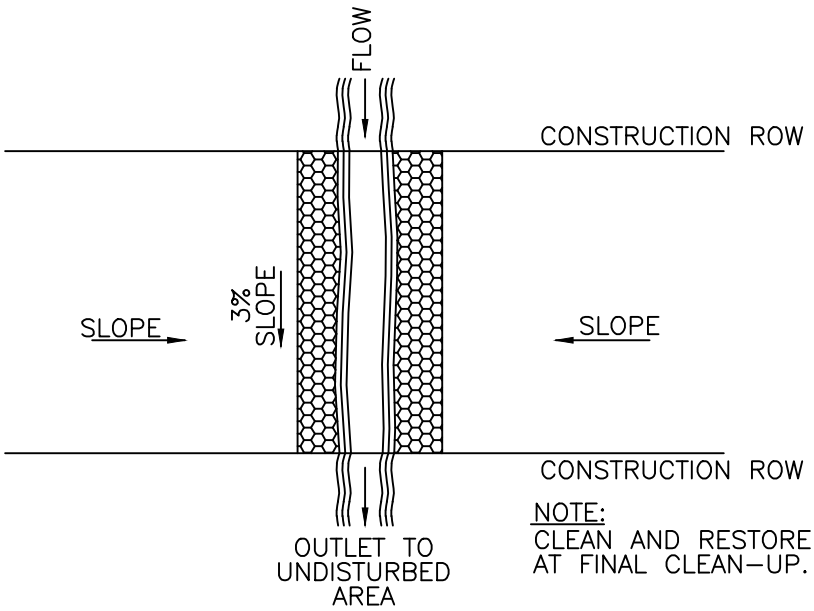

NOTE:
CLEAN AND RESTORE DITCH AT FINAL CLEAN-UP.

SEE BMP 14 FOR OPTIONAL DIMENSIONS

CONSTRUCTION SPECIFICATIONS

1. COMPACT ANY FILL REQUIRED IN THE SUBGRADE TO A DENSITY APPROXIMATING THAT OF THE SURROUNDING UNDISTURBED MATERIAL.
2. OVERFILL DEPRESSIONS WITH RIPRAP.
3. REMOVE BRUSH, TREES, STUMPS, AND OTHER OBJECTIONABLE MATERIAL.
4. CUT THE SUBGRADE SUFFICIENTLY DEEP SO THAT THE FINISHED GRADE OF THE RIPRAP WILL BE AT THE ELEVATION OF THE SURROUNDING AREA. CHANNELS SHOULD BE EXCAVATED SUFFICIENTLY TO ALLOW PLACEMENT OF THE RIPRAP IN A MANNER SUCH THAT THE FINISHED INSIDE DIMENSIONS AND GRADE OF THE RIPRAP MEET DESIGN SPECIFICATIONS.
5. PLACE THE SAND AND GRAVEL FILTER BLANKET IMMEDIATELY AFTER THE GROUND FOUNDATION IS PREPARED FOR GRAVEL, SPREAD FILTER STONE IN A UNIFORM LAYER TO THE SPECIFIED DEPTH. WHERE MORE THAN ONE LAYER OF FILTER MATERIAL IS USED, SPREAD THE LAYERS WITH MINIMAL MIXING.
6. PLACE THE FILTER FABRIC DIRECTLY ON THE PREPARED FOUNDATION. OVERLAP THE EDGES BY AT LEAST 12 INCHES, AND SPACE ANCHOR PINS EVERY 3 FEET ALONG THE OVERLAP. BURY THE UPPER AND LOWER ENDS OF THE CLOTH A MINIMUM OF 12 INCHES BELOW GROUND. TAKE CARE NOT TO DAMAGE THE CLOTH WHEN PLACING RIPRAP.
7. WHERE LARGE STONES ARE USED OR MACHINE PLACEMENT IS DIFFICULT, A 4-INCH LAYER OF FINE GRAVEL OR SAND MAY BE NEEDED TO PROTECT THE FILTER FABRIC.
8. PLACEMENT OF RIPRAP SHOULD FOLLOW IMMEDIATELY AFTER PLACEMENT OF THE FILTER.
9. PLACE RIPRAP SO THAT IT FORMS A DENSE, WELL-GRADED MASS OF STONE WITH A MINIMUM OF VOIDS.
10. PLACE RIPRAP TO ITS FULL THICKNESS IN ONE OPERATION.
11. DO NOT PLACE RIPRAP BY DUMPING THROUGH CHUTES OR OTHER METHODS THAT CAUSE SEGREGATION OF STONE SIZES.
12. TAKE CARE NOT TO DISLODGE THE UNDERLYING BASE OR FILTER WHEN PLACING THE STONES.
13. THE FINISHED SLOPE SHOULD BE FREE OF POCKETS OF SMALL STONE OR CLUSTERS OF LARGE STONES.

MAINTENANCE
RIPRAP SHOULD BE INSPECTED PERIODICALLY FOR SCOUR OR DISLODGED STONES. CONTROL OF WEED AND BRUSH GROWTH MAY BE NEEDED IN SOME LOCATIONS.

national Fuel SUPPLY CORPORATION	ENGINEERING DEPT. 1100 STATE STREET P.O. BOX 2081 ERIE, PA. 16512 (814) 871-8676	DRAWN BY: L. A. PHILLIPS FILENAME: EPC\BMP27.dwg LAST REVISION DATE: 06/27/2007	STORM WATER CHANNEL	DRAWING NUMBER: 27

FILTER BAGS FOR REMOVING SEDIMENT FROM PUMPED WATER

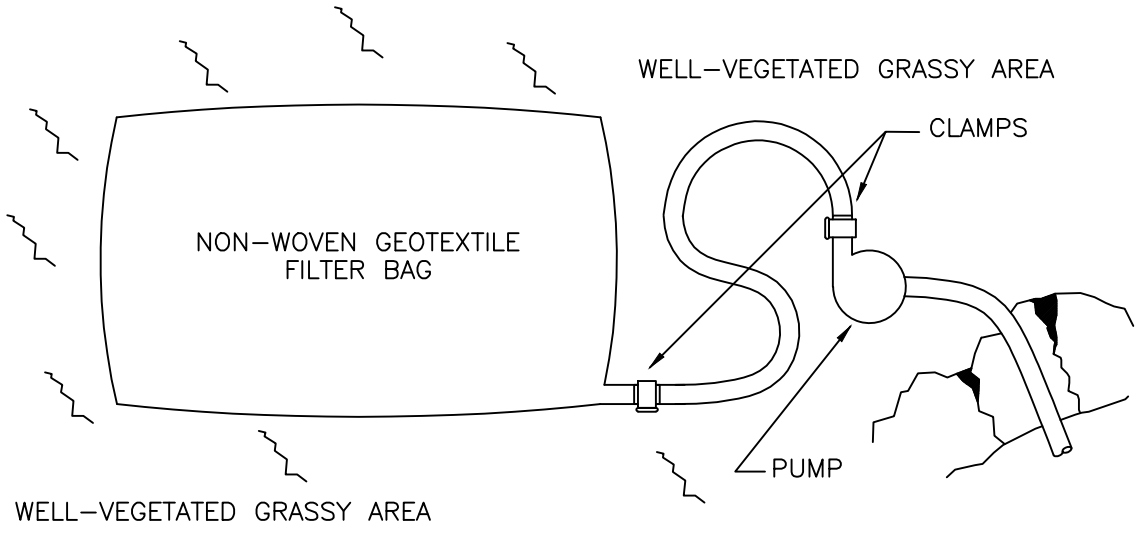

PLAN VIEW

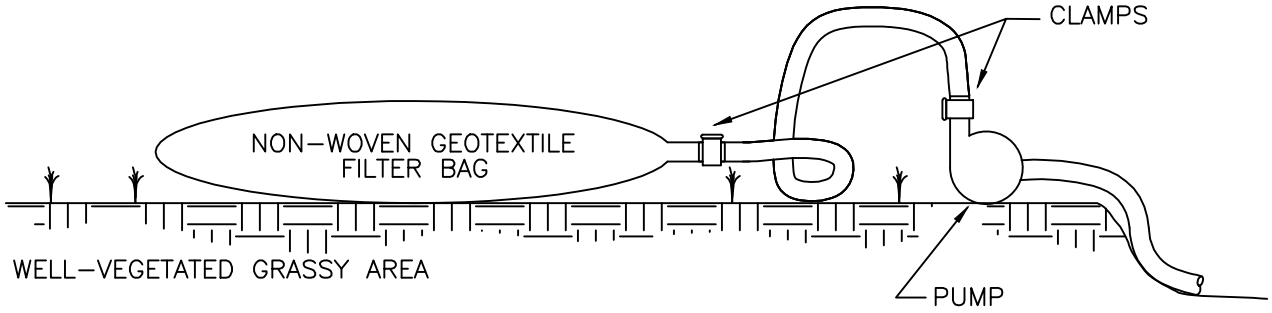

ELEVATION VIEW

1. FILTER BAGS SHALL BE MADE FROM NON–WOVEN GEOTEXTILE MATERIAL SEWN WITH HIGH STRENGTH, DOUBLE STITCHED "J" TYPE SEAMS. THEY SHALL BE CAPABLE OF TRAPPING PARTICLES LARGER THAN 150 MICRONS.
2. A SUITABLE MEANS OF ACCESSING THE BAG WITH MACHINERY REQUIRED FOR DISPOSAL PURPOSES MUST BE PROVIDED. FILTER BAGS SHALL BE REPLACED WHEN THEY BECOME 1/2 FULL. SPARE BAGS SHALL BE KEPT AVAILABLE FOR REPLACEMENT OF THOSE THAT HAVE FAILED OR ARE 1/2 FILLED WITH SEDIMENT.
3. BAGS SHALL BE LOCATED IN WELL–VEGETATED (GRASSY) AREA AND DISCHARGE ONTO STABLE, EROSION RESISTANT AREAS. WHERE THIS IS NOT POSSIBLE, A GEOTEXTILE FLOW PATH SHALL BE PROVIDED. BAGS SHALL NOT BE PLACED ON SLOPES GREATER THAN 5%.
4. THE PUMP DISCHARGE HOSE SHALL BE INSERTED INTO THE BAGS IN THE MANNER SPECIFIED BY THE MANUFACTURER AND SECURELY CLAMPED.
5. THE PUMPING RATE SHALL BE NO GREATER THAN 750 GPM OR 1/2 THE MAXIMUM SPECIFIED BY THE MANUFACTURER, WHICHEVER IS LESS. PUMP INTAKES SHOULD BE FLOATING AND SCREENED.
6. ALL FILTER BAGS AND TRAPPED SEDIMENT SHALL BE REMOVED TO A SUITABLE WASTE AREA WHEN ACCUMULATED SEDIMENTS REACH 1/2 TOTAL BAG CAPACITY.

IF SEDIMENT IS OBSERVED LEAVING THE FILTER BAG, UTILIZE STRAW BALE CONTAINMENT SIMILAR TO BMPs 47–48.

national Fuel SUPPLY CORPORATION	ENGINEERING DEPT. 1100 STATE STREET P.O. BOX 2081 ERIE, PA. 16512 (814) 871–8676	DRAWN BY: NICHTER/PHILLIPS FILENAME: EPC\BMP28.dwg DATE: 11/15/2013	DEWATERING FILTER BAG	DRAWING NUMBER: 28

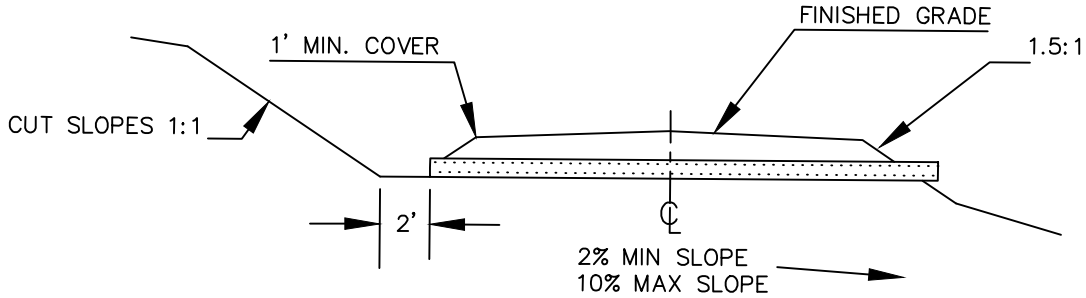

CULVERT SECTION

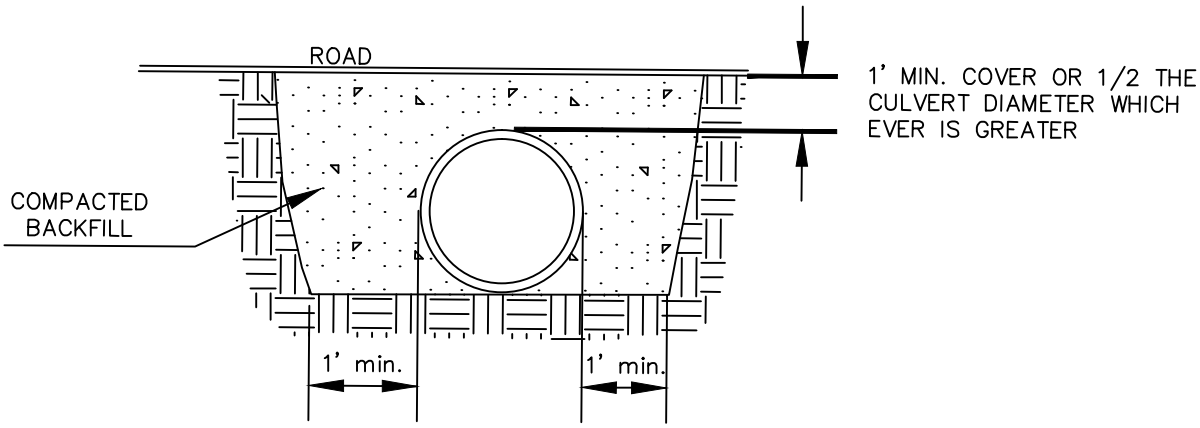

CULVERT – END VIEW

PROFILE VIEW

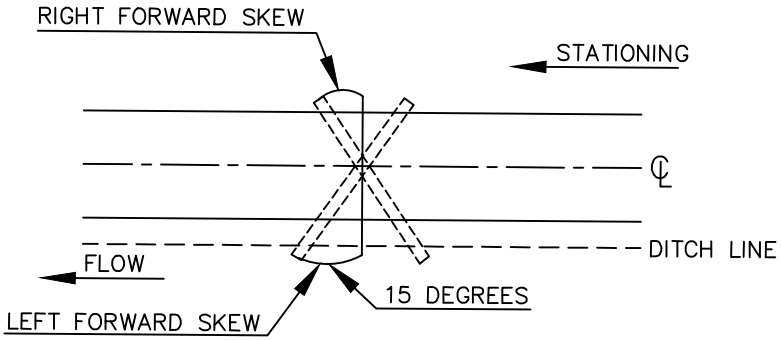

SKEW DETAIL

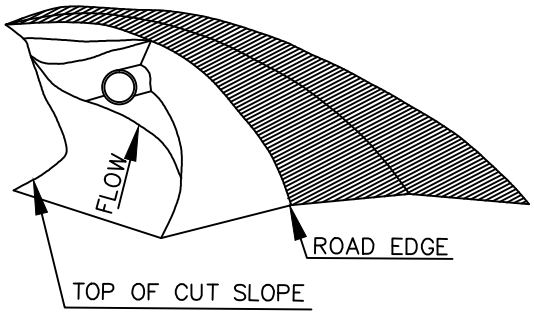

DITCH BLOCK

PERSPECTIVE VIEW

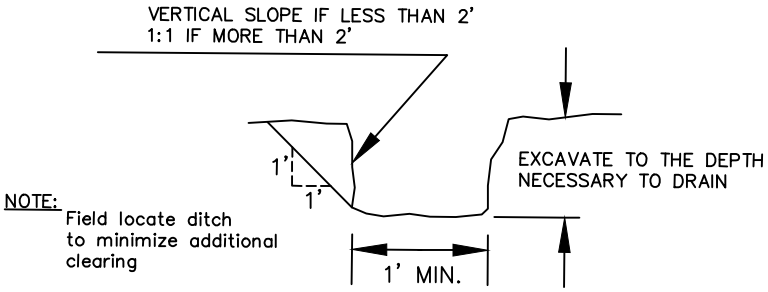

NOTE: Field locate ditch to minimize additional clearing

OUTLET DITCH SECTION

national Fuel SUPPLY CORPORATION	ENGINEERING DEPT. 1100 STATE STREET P.O. BOX 2081 ERIE, PA. 16512 (814) 871-8676	DRAWN BY: P. BLAKESLEE FILENAME: NFGSC\BMP29.dwg DATE: 09/14/01	ROAD CULVERT	DRAWING NUMBER: 29

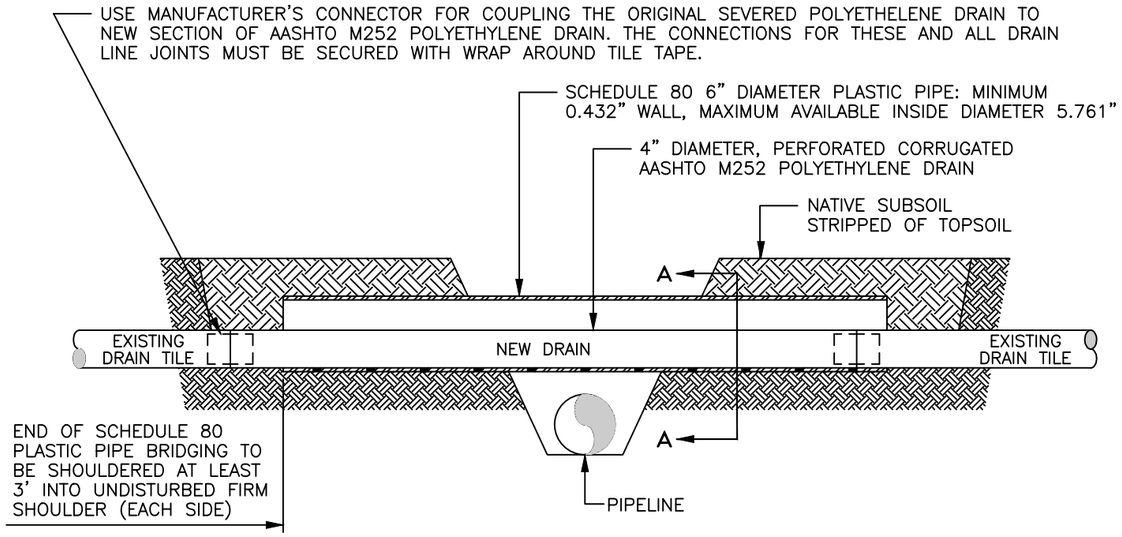

DRAINAGE TILE	SUPPORT SIZE
3" TO 5"	6" PIPE
6"	8" PIPE
7" TO 8"	10" PIPE
9" TO 10"	12" PIPE
12"	W12 x 14
15" TO 18"	W16 x 26
OVER 18"	W18 x 46

PVC SCHEDULE 80 PIPE (FOR BRIDGING–SLEEVES)

NOMINAL SIZE (INCHES)	AVERAGE O.D. (INCHES)	MAXIMUM WALL THICKNESS (INCHES)	MAXIMUM AVAILABLE I.D. (INCHES)
4	4.500	0.337	3.826
6	6.625	0.432	5.761
8	8.625	0.500	7.625
10	10.750	0.593	9.564
12	12.750	0.687	11.376

AASHTO M252
SINGLE WALL, CORRUGATED, PERFORATED (SLOTTED) POLYETHYLENE DRAIN LINE

NOMINAL SIZE (INCHES)	OUTSIDE DIAMETER (INCHES)
4	4.71
6	7.00
8	9.90
10	11.90
12	14.41
15	17.70

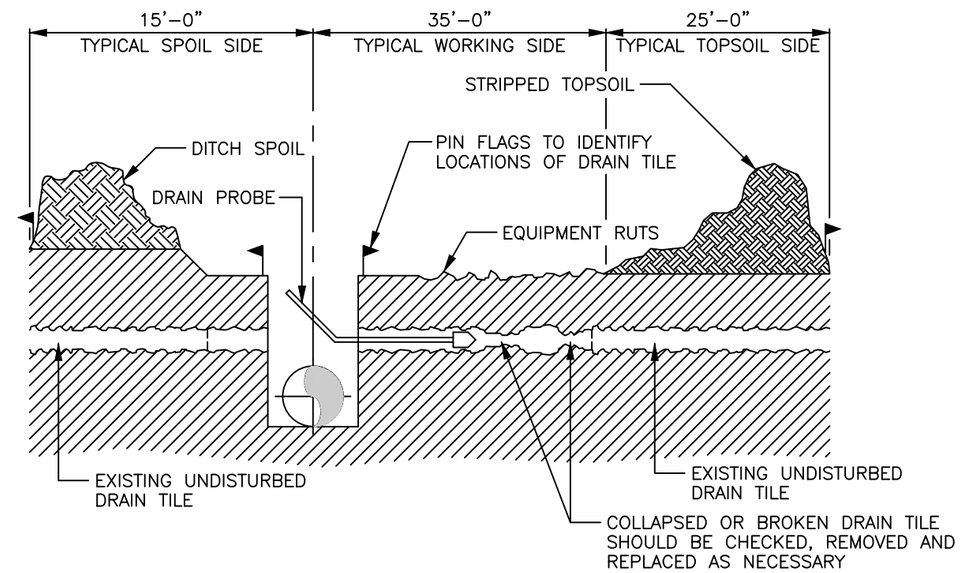

NOTE:

WITHIN ALL AREAS OF CONSTRUCTION ACTIVITIES;

1. PROBE AND CLEAN OUT ALL DRAIN TILES.
2. REPLACE ANY DAMAGED TILES.
3. REPAIR ANY DAMAGED JOINTS.

SECTION A–A VIEW OF DRAIN LINE PROTECTED BY PERFORATED, DURABLE SLEEVE

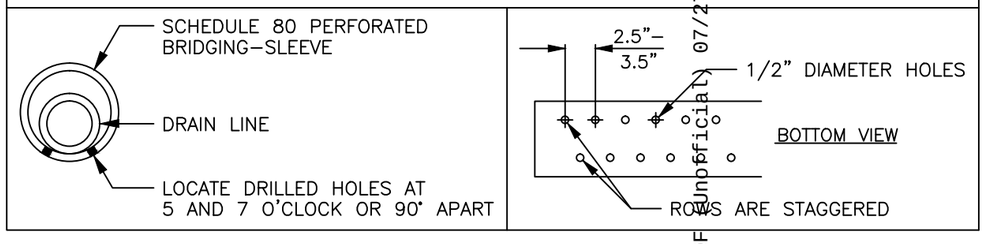

NOTES:

1. THE BRIDGING–SLEEVE REPAIR IS VERTICALLY POSITIONED ACROSS THE TRENCH SO IT MAINTAINS THE GRAVITY–FLOW GRADIENT OF THE ORIGINAL DRAIN TILE.
2. BOTH OF THE RECONNECTIONES MAY BE LOCATED PHYSICALLY OUTSIDE OF THE BRIDGING–SLEEVE (LEFT) OR INSIDE THE SLEEVE (RIGHT) AFTER SLIDING IT OVER THE REPAIR.

20160727-3003 FERC PDF (Unofficial) 07/27/2016

national Fuel SUPPLY CORPORATION	DRAWN BY: L. A. PHILLIPS FILENAME: NFGSC\BMP30.dwg DATE: 06/24/2005	TYPICAL DRAIN TILE REPAIR ACROSS TRENCH

DRAWING NUMBER: 30

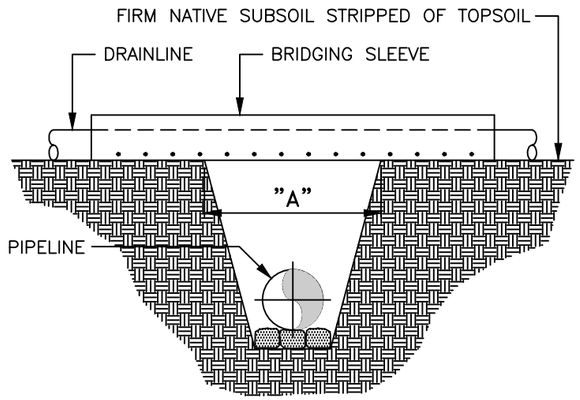

IF DISTANCE "A" DOES NOT EXCEED 10 FEET, THE SCHEDULE 80 PERFORATED BRIDGING–SLEEVE DOES NOT REQUIRE SUPPORT UNDER THE BRIDGING–SLEEVE.

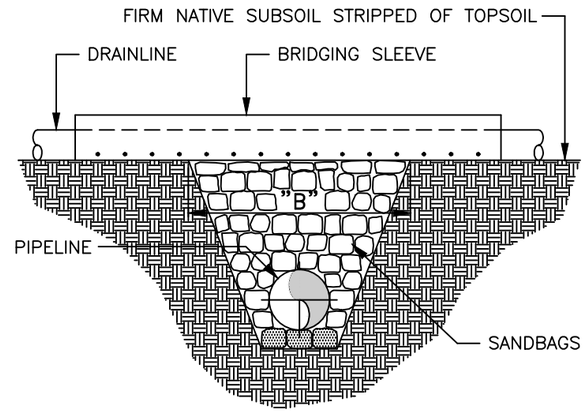

IF DISTANCE "B" EXCEEDS 10 FEET, THE SCHEDULE 80 PERFORATED BRIDGING SLEEVE REQUIRES A MODIFIED SANDBAG TRENCH BREAKER UNDER THE BRIDGING SLEEVE

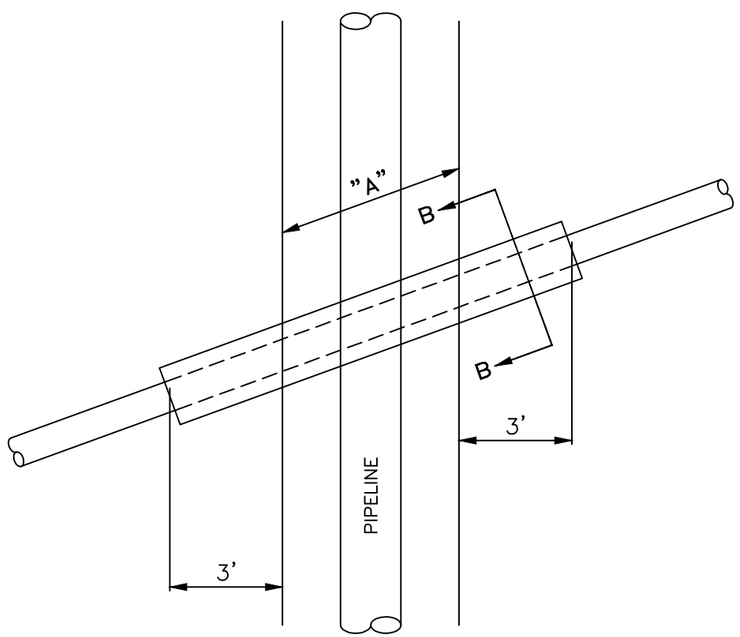

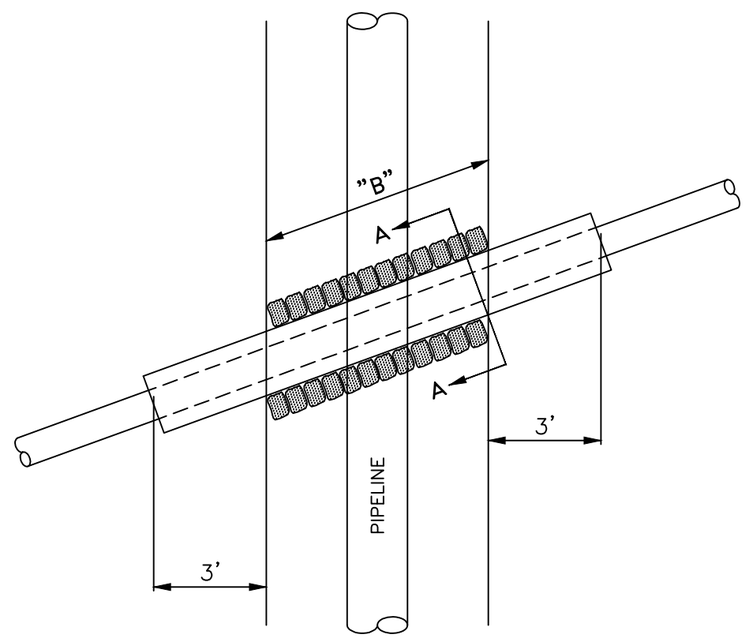

CROSS SECTION "B–B" IS THE SAME AS CROSS SECTION "A–A", MINUS THE SAND BAG TRENCH BREAKER. MINIMUM OF 1"–2" WASHED STONE 4"–6" THICK UNDERNEATH, AROUND SIDES AND OVER TOP OF THE BRIDGING SLEEVE.

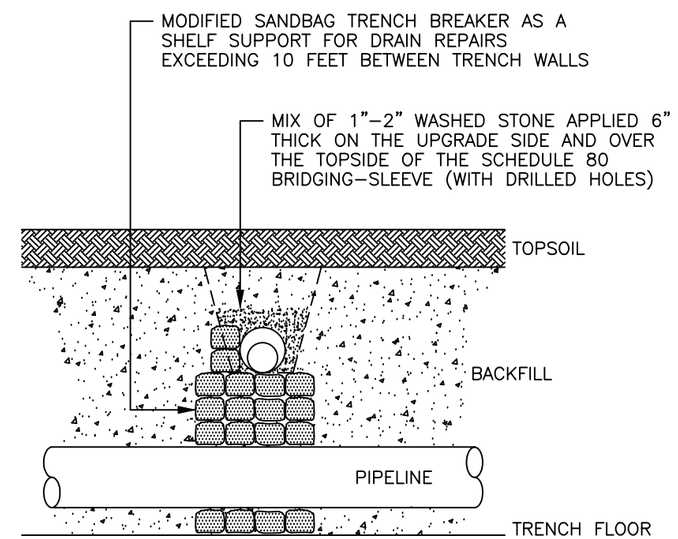

THE BRIDGING–SLEEVE DRAIN REPAIR RESTS ON THE UPGRADIENT SIDE OF THE MODIFIED SANDBAG TRENCH BREAKER. THE HIGHER PORTION OF THE TRENCH BREAKER IS ON THE DOWN GRADIENT SIDE OF THE REPAIR.

NOTE: IF THE REPAIR OF THE SEVERED DRAINLINE CROSSES THE PIPELINE TRENCH AT AN ANGLE REQUIRING MORE THAN 20' OF BRIDGING–SLEEVE BETWEEN THE FARTHEST ENDS OF THE FIRM SHELVES, MODIFY THE CROSSING ANGLE TO SHORTEN THE TOTAL LENGTH OF THE CROSSING AND THEN TIE TO THE EXISTING DRAIN TILE.

SECTION A-A

20160727-4003 FERC PDF (Unofficial) 07/27/2016

national Fuel SUPPLY CORPORATION	DRAWN BY: L. A. PHILLIPS FILENAME: NFGSC\BMP30A.dwg DATE: 06/29/2005	TYPICAL DRAIN TILE REPAIR ACROSS TRENCH	DRAWING NUMBER: 30A

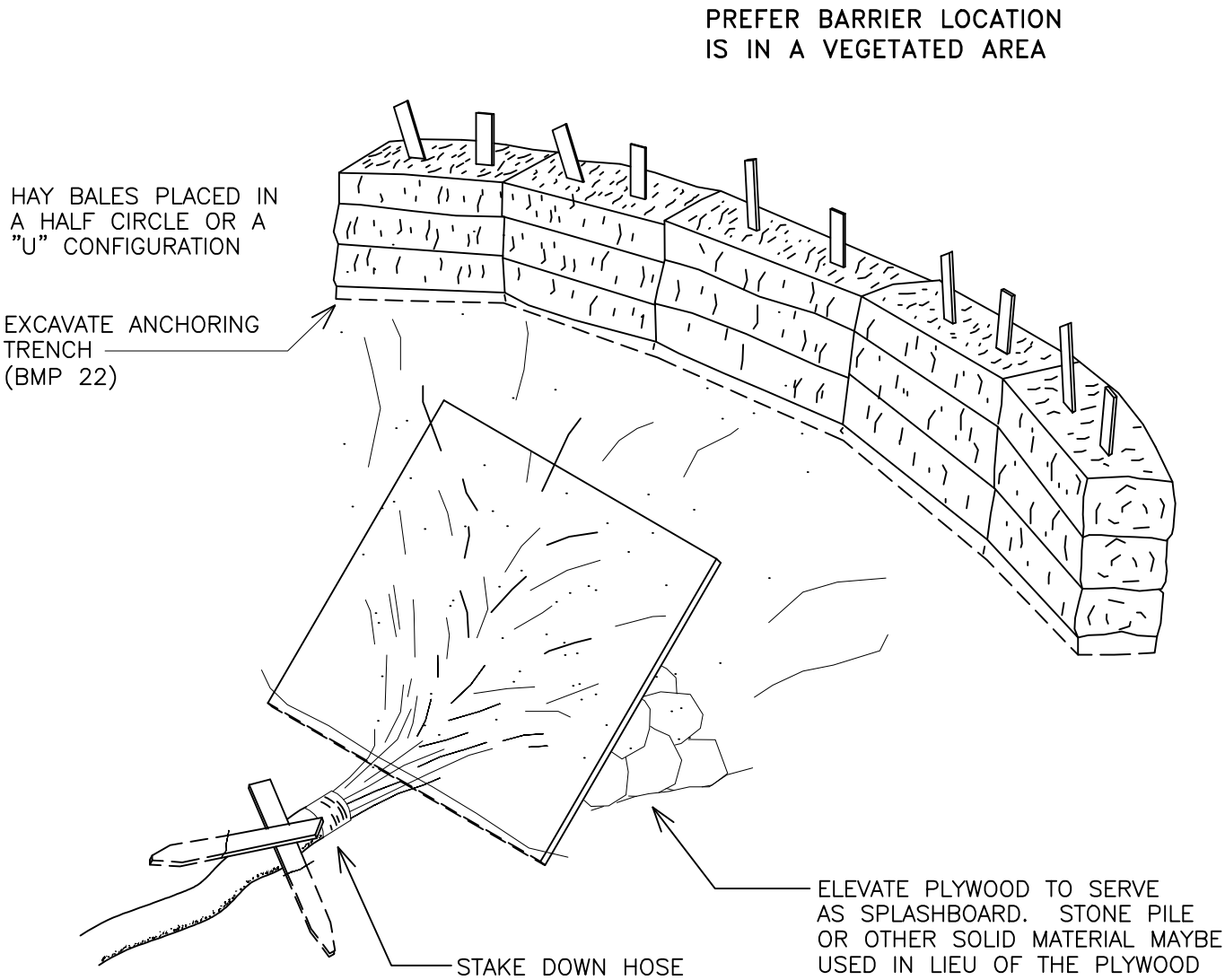

**ALTERNATIVE CONTROLS USED FOR TRENCH (BMP 28)
HYDROSTATIC DE-WATERING (BMP 3)**

national Fuel SUPPLY CORPORATION	ENGINEERING DEPT. 1100 STATE STREET P.O. BOX 2081 ERIE, PA. 16512 (814) 871-8676	DRAWN BY: DRISCOLL/PHILLIPS FILENAME: EPC\BMP31.dwg LAST REVISION DATE: 06/27/2007	ENERGY DISSIPATER	DRAWING NUMBER: 31

PLAN VIEW

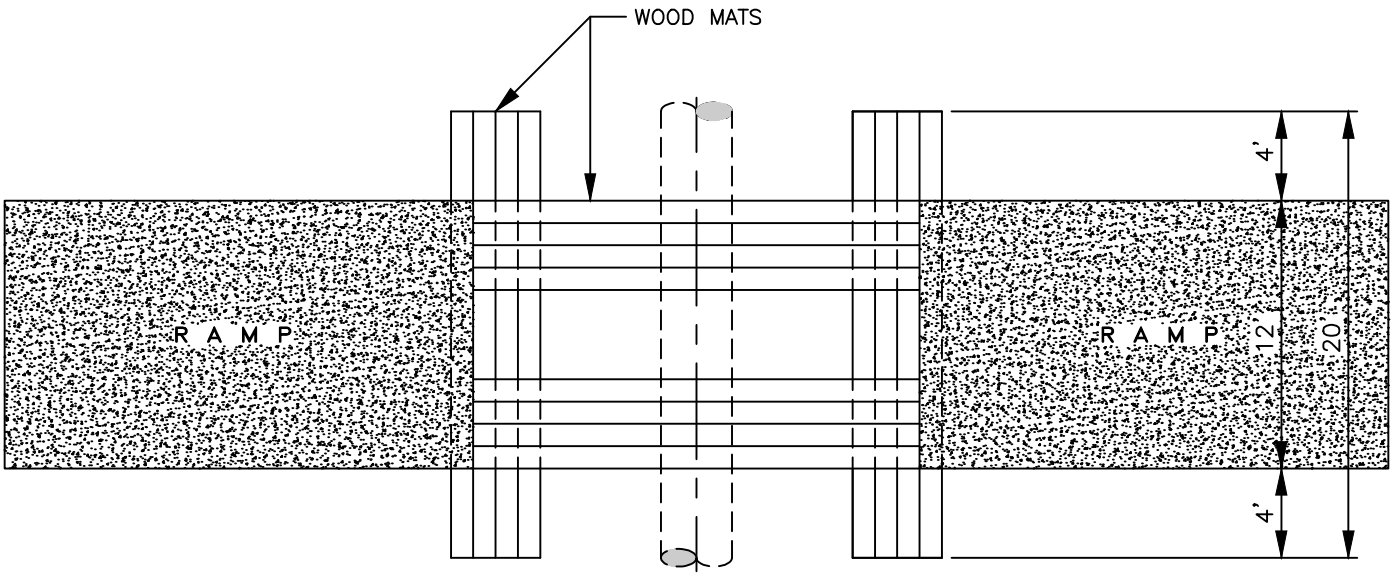

SIDE VIEW

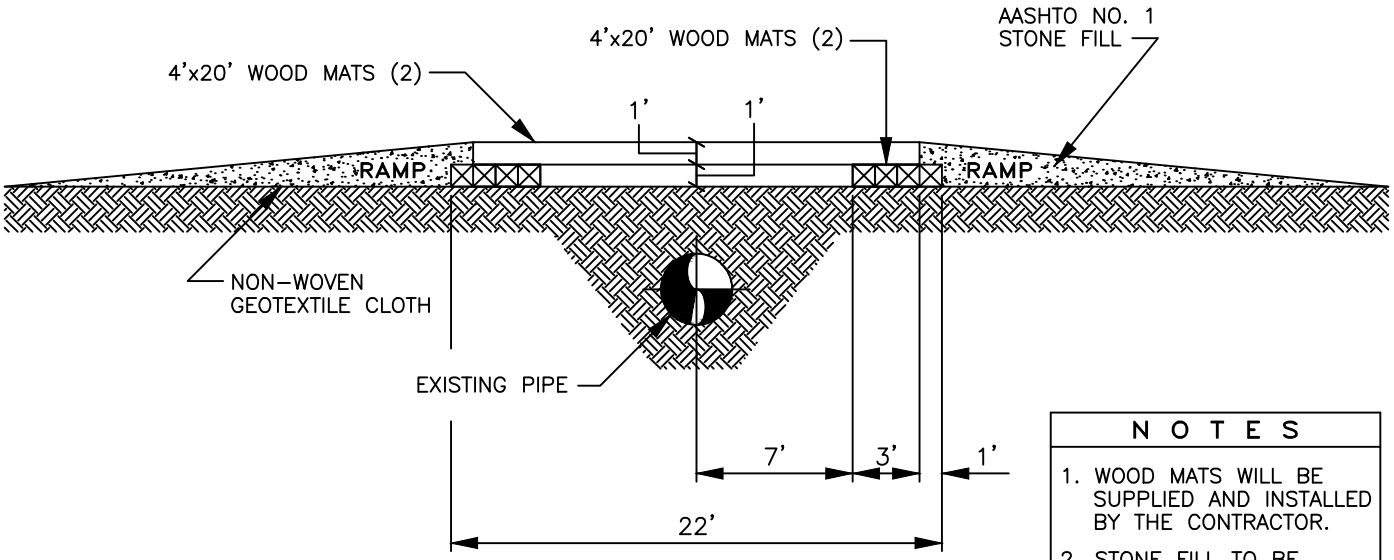

SPECIAL NOTE:

PROPOSED VEHICLE & EQUIPMENT WHEEL / TRACK LOAD WEIGHTS SHALL BE PROVIDED TO NFG ENGINEERING SERVICES TO DETERMINE IF ADDITIONAL MEASURES ARE NECESSARY BASE ON THE SPECIFIC PIPELINE TO BE CROSSED.

N O T E S

1. WOOD MATS WILL BE SUPPLIED AND INSTALLED BY THE CONTRACTOR.
2. STONE FILL TO BE SUPPLIED AND INSTALLED BY THE CONTRACTOR.
3. ADDITIONAL MATS, IF NEEDED, WILL BE SUPPLIED AND INSTALLED BY THE CONTRACTOR.

national Fuel SUPPLY CORPORATION	ENGINEERING DEPT. 1100 STATE STREET P.O. BOX 2081 ERIE, PA. 16512	DRAWN BY: L. A. PHILLIPS FILENAME: NFGSC\BMP32.dwg REVISED DATE: 02/21/2012	WOODEN MAT BRIDGE PIPELINE CROSSING	DRAWING NUMBER: 32

PLAN VIEW

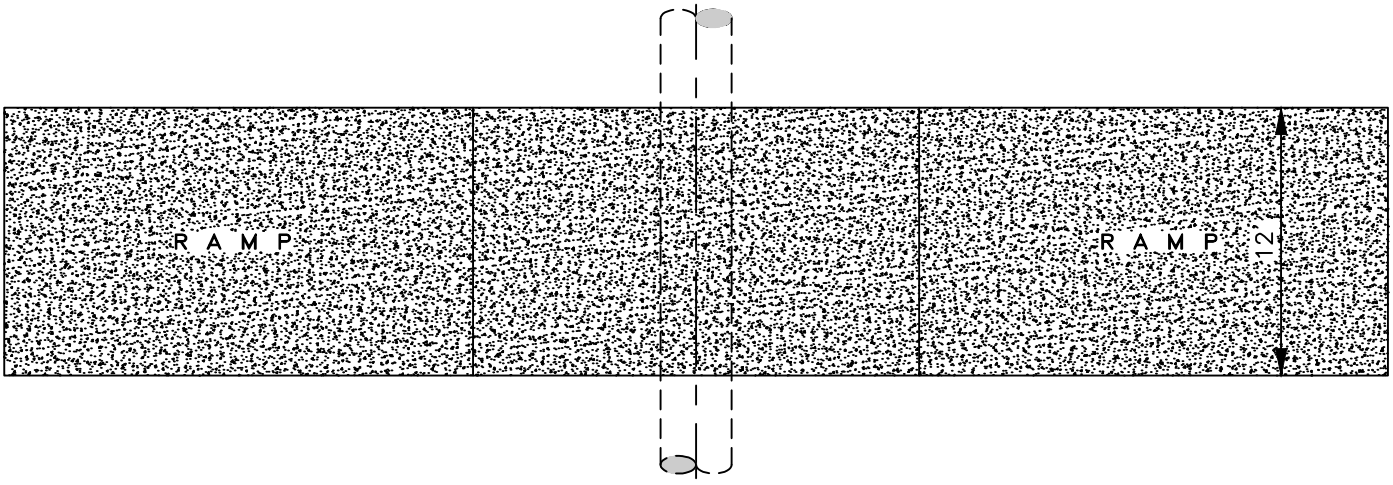

SIDE VIEW

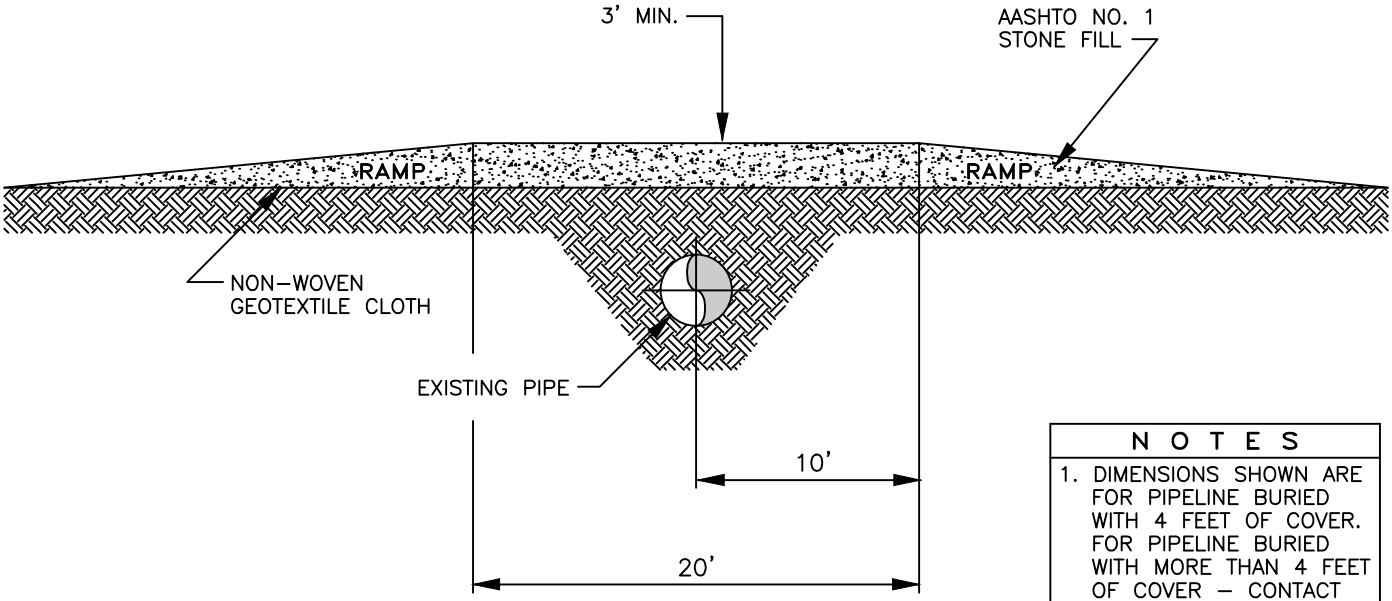

SPECIAL NOTE:
PROPOSED VEHICLE & EQUIPMENT WHEEL / TRACK LOAD WEIGHTS SHALL BE PROVIDED TO NFG ENGINEERING SERVICES TO DETERMINE IF ADDITIONAL MEASURES ARE NECESSARY BASED ON THE SPECIFIC PIPELINE TO BE CROSSED.

NOTES

1. DIMENSIONS SHOWN ARE FOR PIPELINE BURIED WITH 4 FEET OF COVER. FOR PIPELINE BURIED WITH MORE THAN 4 FEET OF COVER – CONTACT ENGINEER.
2. STONE FILL TO BE SUPPLIED AND INSTALLED BY THE CONTRACTOR.

national Fuel SUPPLY CORPORATION	ENGINEERING DEPT. 1100 STATE STREET P.O. BOX 2081 ERIE, PA. 16512	DRAWN BY: L. A. PHILLIPS FILENAME: NFGSC\BMP32.dwg REVISED DATE: 02/21/2012	STONE BRIDGE PIPELINE CROSSING	DRAWING NUMBER: 32A

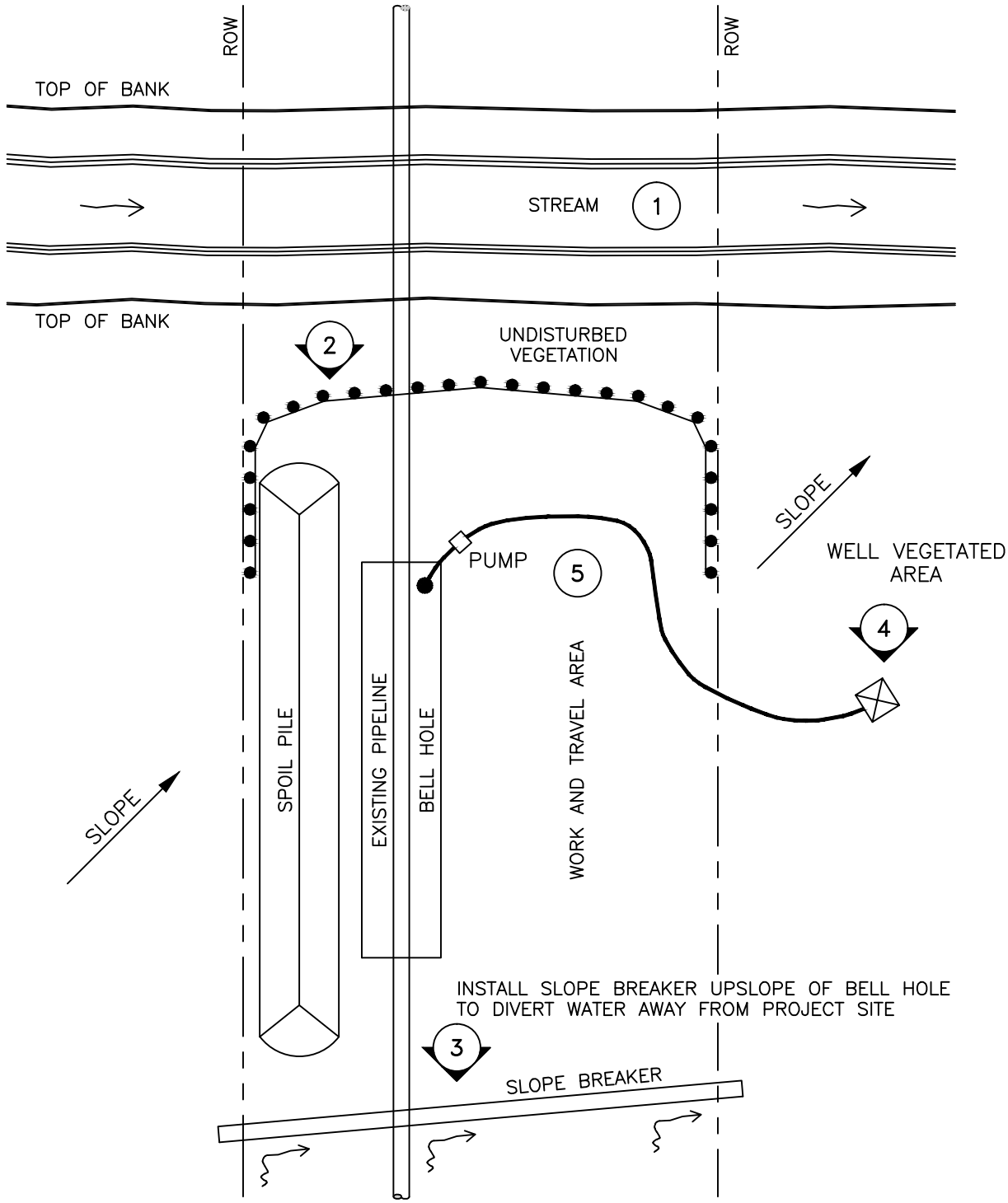

1. REFER TO BMP NO. 9 FOR STREAM CROSSING REQUIREMENTS AND PROCEDURE.
2. REFER TO BMP NO. 5 FOR FILTER FENCE INSTALLATION AND BMP NO. 45A,B,C FOR COMPOST FILTER SOCK INSTALLATION AS PERMITTED AND AS PER PERMIT APPROVAL.
3. REFER TO BMP NO. 8A FOR SLOPE BREAKER INSTALLATION.
4. REFER TO BMP NO. 28 AND 31 FOR DEWATERING FILTER BAG AND ENERGY DISSIPATION.
5. ALL DISTURBED AREAS TO BE RESTORED AND STABILIZED IMMEDIATELY AFTER BACKFILLING.

national fuel SUPPLY CORPORATION	ENGINEERING DEPT. 1100 STATE STREET P.O. BOX 2081 ERIE, PA. 16512 (814) 871-8676	DRAWN BY: L. A. PHILLIPS FILENAME: NFGSC\BMP33.dwg LAST REVISION DATE: 01/23/2004	BELL HOLE NEXT TO WATERBODY	DRAWING NUMBER: 33

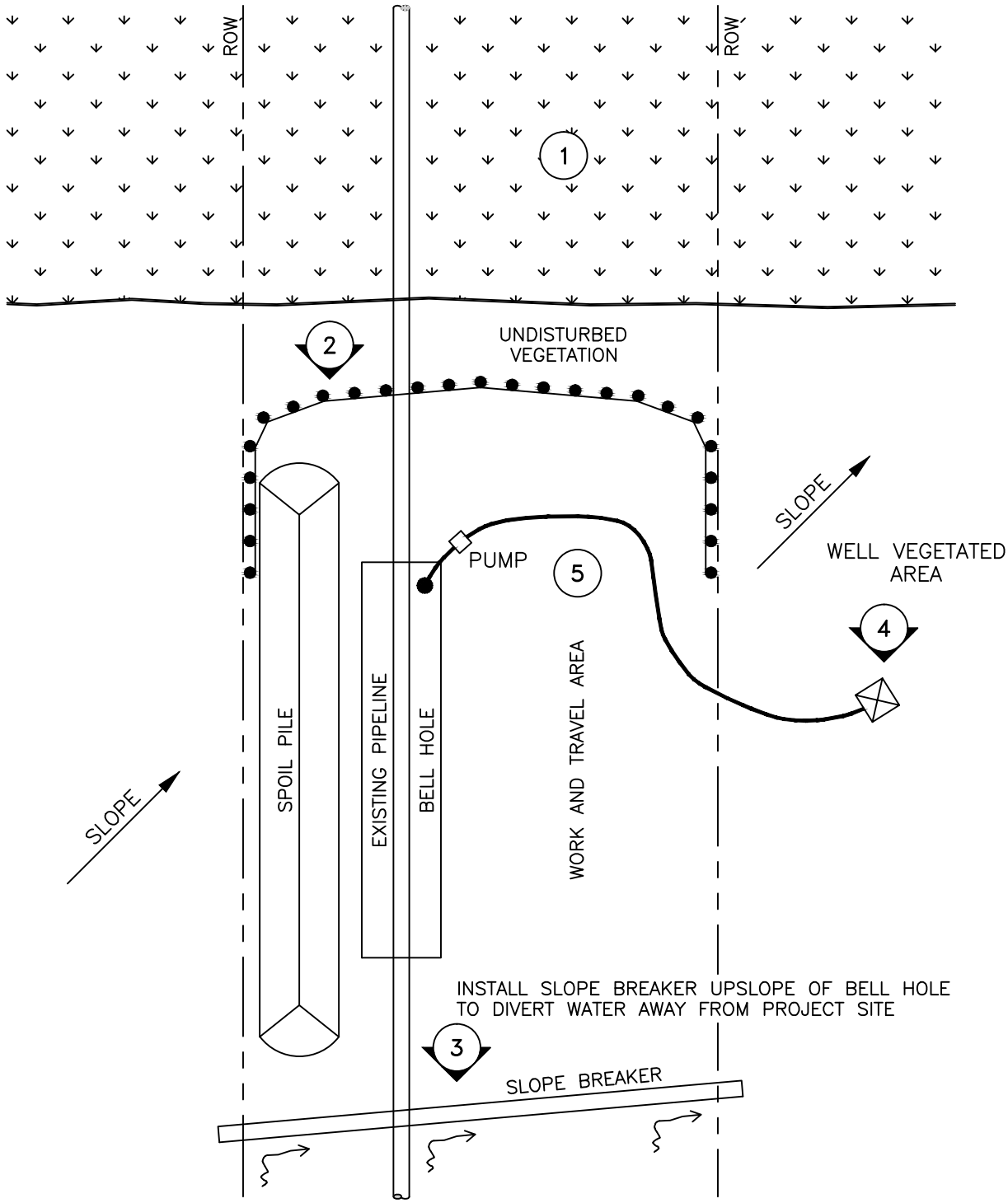

1. REFER TO BMP NO. 4/4A FOR WETLAND CROSSING/TRAVEL REQUIREMENTS AND PROCEDURES.
2. REFER TO BMP NO. 5 FOR FILTER FENCE INSTALLATION AND BMP NO. 45A,B,C FOR COMPOST FILTER SOCK INSTALLATION AS PERMITTED AND AS PER PERMIT APPROVAL.
3. REFER TO BMP NO. 8A FOR SLOPE BREAKER INSTALLATION.
4. REFER TO BMP NO. 28 AND 31 FOR DEWATERING FILTER BAG AND ENERGY DISSIPATION.
5. ALL DISTURBED AREAS TO BE RESTORED AND STABILIZED IMMEDIATELY AFTER BACKFILLING.

national Fuel SUPPLY CORPORATION	ENGINEERING DEPT. 1100 STATE STREET P.O. BOX 2081 ERIE, PA. 16512 (814) 871-8676	DRAWN BY: L. A. PHILLIPS FILENAME: NFGSC\BMP34.dwg LAST REVISION DATE: 02/23/2005	BELL HOLE NEXT TO WETLAND	DRAWING NUMBER: 34

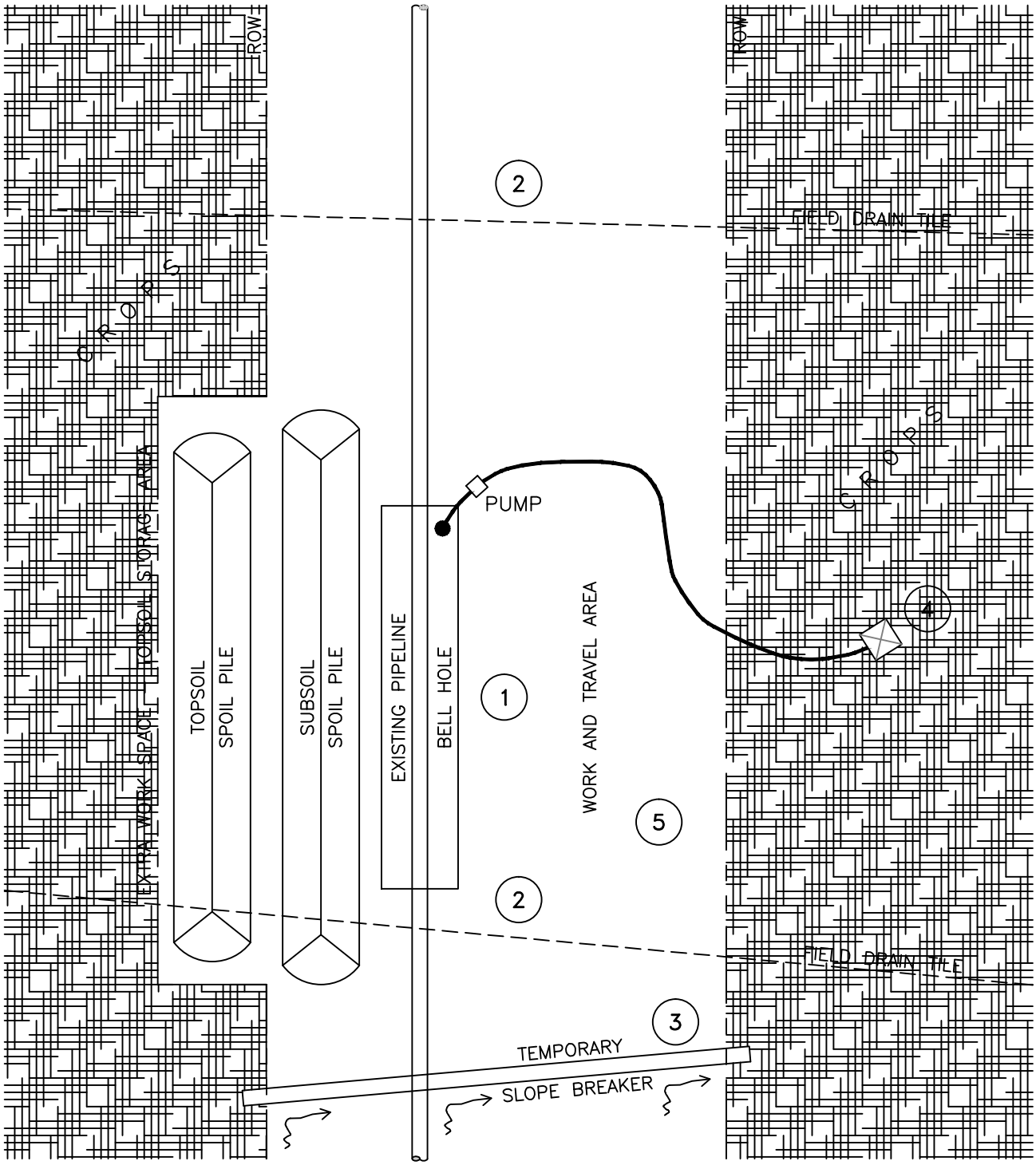

1. REFER TO BMP NO. 23A AND 23B FOR FULL ROW TOPSOIL SEGREGATION REQUIREMENTS AND PROCEDURES.
2. REFER TO BMP NO. 30 AND 30A FOR DRAIN TILE REPAIR ACROSS TRENCH REQUIREMENTS AND PROCEDURES.
3. REFER TO BMP NO. 8A FOR SLOPE BREAKER INSTALLATION.
4. REFER TO BMP NO. 28 AND 31 FOR DEWATERING FILTER BAG AND ENERGY DISSIPATION.
5. ALL DISTURBED AREAS TO BE RESTORED AND STABILIZED IMMEDIATELY AFTER BACKFILLING.

national Fuel SUPPLY CORPORATION	ENGINEERING DEPT. 1100 STATE STREET P.O. BOX 2081 ERIE, PA. 16512 (814) 871-8676	DRAWN BY: L. A. PHILLIPS FILENAME: NFGSC\BMP35.dwg LAST REVISION DATE: 02/23/2005	BELL HOLE AGRICULTURAL FIELD	DRAWING NUMBER: 35

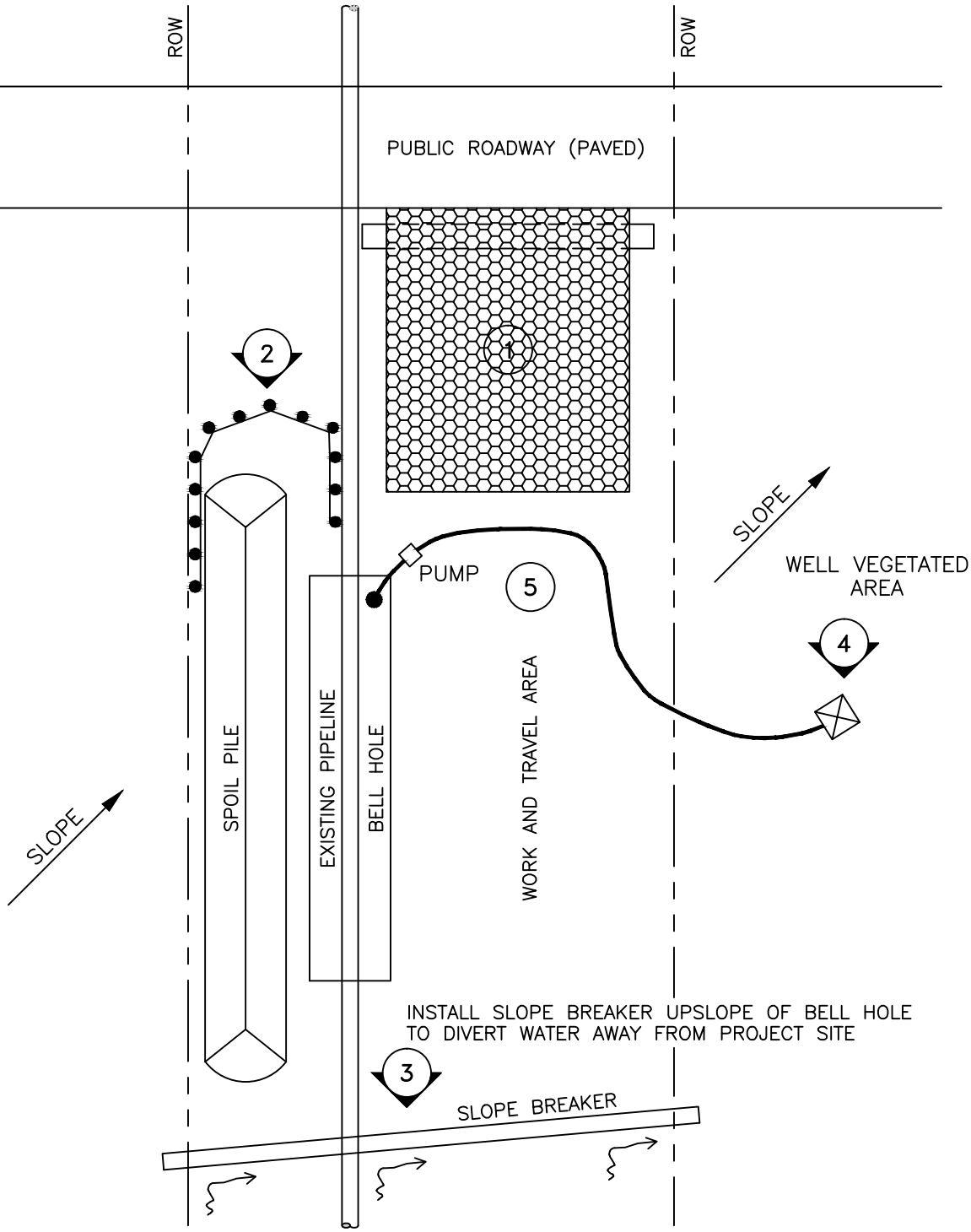

1. REFER TO BMP NO. 1 FOR ENTRANCE PAD INSTALLATION.
2. REFER TO BMP NO. 5 FOR FILTER FENCE INSTALLATION AND BMP NO. 45A,B,C FOR COMPOST FILTER SOCK INSTALLATION AS PERMITTED AND AS PER PERMIT APPROVAL.
3. REFER TO BMP NO. 8A FOR SLOPE BREAKER INSTALLATION.
4. REFER TO BMP NO. 28 AND 31 FOR DEWATERING FILTER BAG AND ENERGY DISSIPATION.
5. ALL DISTURBED AREAS TO BE RESTORED AND STABILIZED IMMEDIATELY AFTER BACKFILLING.

national Fuel SUPPLY CORPORATION	ENGINEERING DEPT. 1100 STATE STREET P.O. BOX 2081 ERIE, PA. 16512 (814) 871-8676	DRAWN BY: L. A. PHILLIPS FILENAME: NFGSC\BMP36.dwg LAST REVISION DATE: 02/23/2005	BELL HOLE ADJACENT TO PAVED ROAD	DRAWING NUMBER: 36

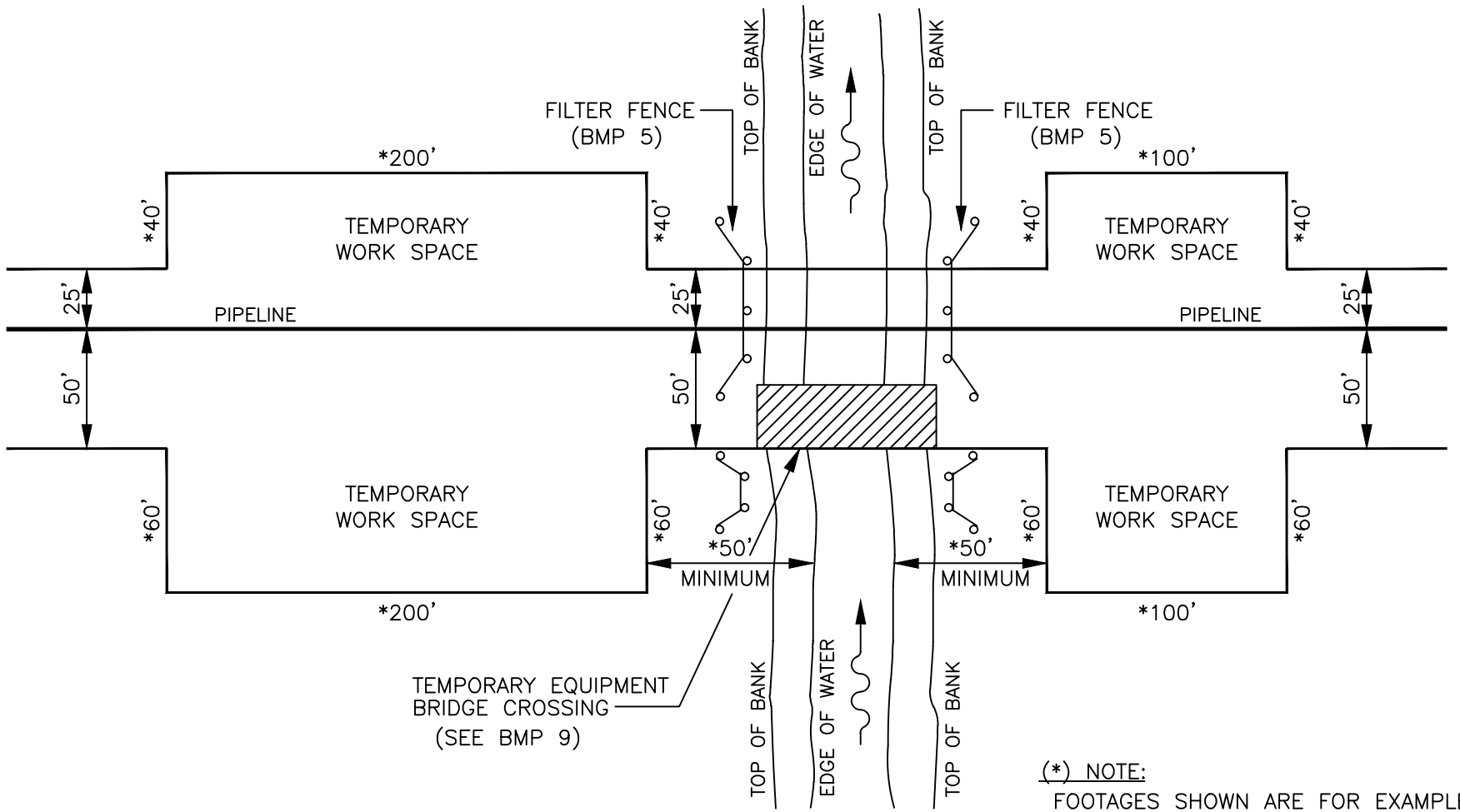

(*) NOTE:
FOOTAGES SHOWN ARE FOR EXAMPLE PURPOSES ONLY. ACTUAL EXTRA WORK SPACE AREAS WILL VARY DEPENDING ON INDIVIDUAL PROJECTS.

1. SPOIL REMOVED DURING TRENCH CONSTRUCTION OF CROSSING MAY BE PLACED 10 FT BACK FROM ORDINARY HIGH WATER MARK PROVIDED E&S CONTROLS INSTALLED.

2. UNDISTURBED VEGETATION BUFFER SHALL BE 25 FT OR TO EDGE OF EXISTING NON-NATIVE VEGETATION WHERE THAT DISTANCE IS <25 FT.

National Fuel SUPPLY CORPORATION	ENGINEERING DEPT. 1100 STATE STREET P.O. BOX 2081 ERIE, PA. 16512 (814) 871-8676	DRAWN BY: L. A. PHILLIPS FILENAME: EPC\BMP37.dwg LAST REVISION DATE: 04/29/2008	EXTRA WORK SPACES	DRAWING NUMBER: 37

20160727-4003 FERC PDF (Unofficial) 07/27/2016

CREST OF BACKFILL TO BE 8" TO 12" HIGH OVER CENTER LINE OF TRENCH AND FEATHERED OUT TO ZERO 18" TO 24" FROM TRENCH WALL

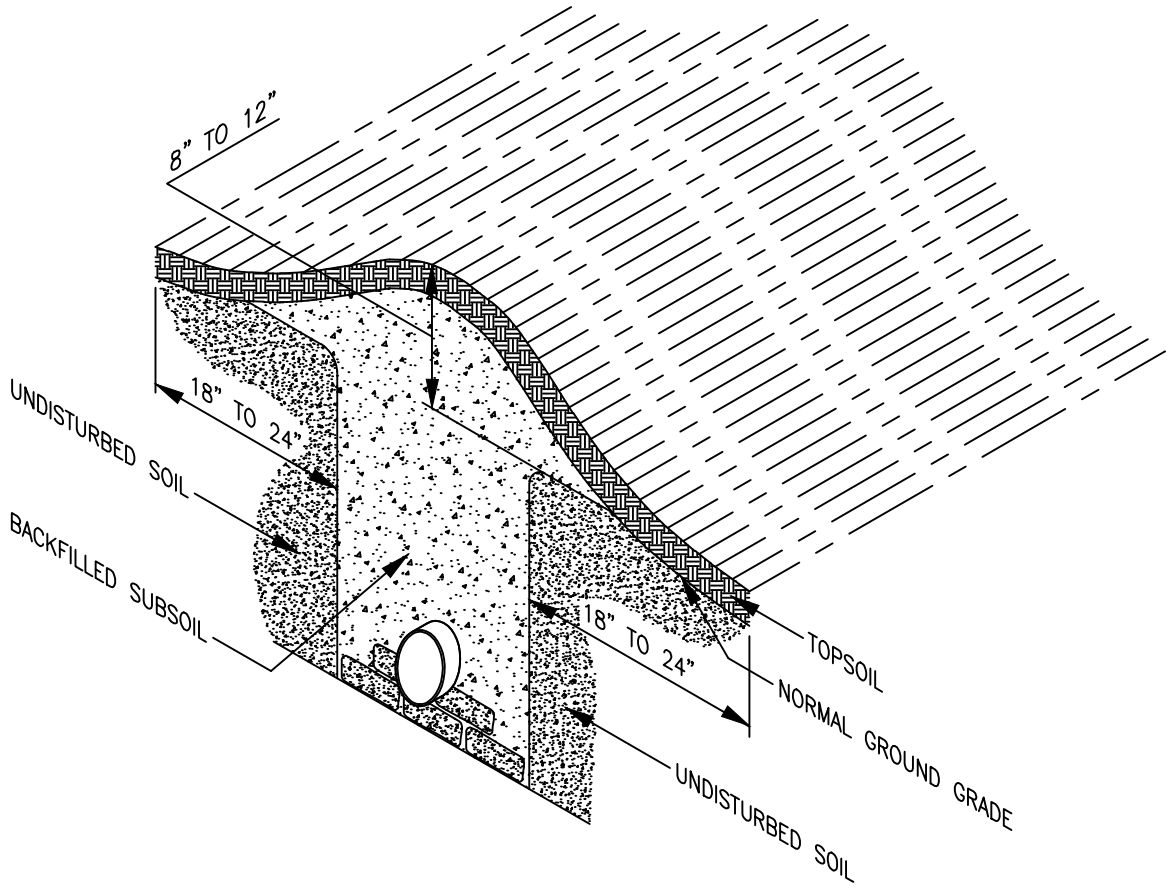

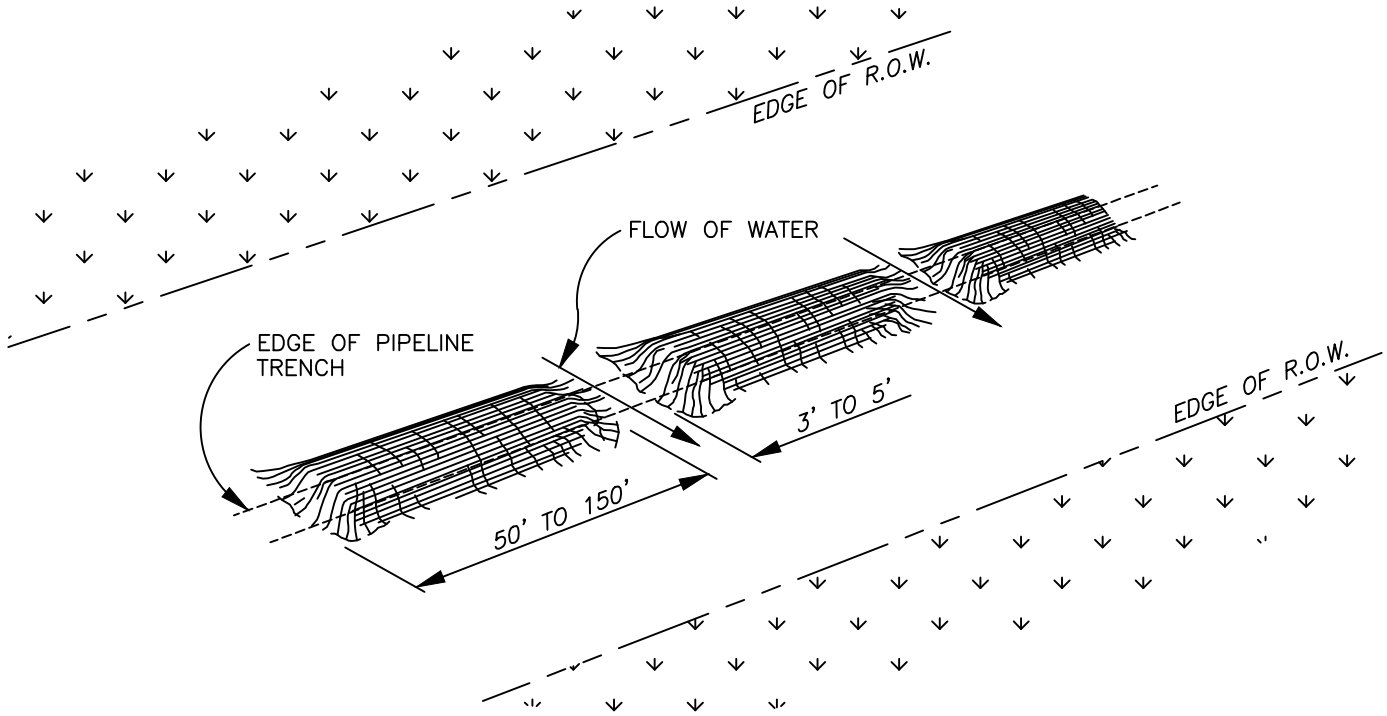

national Fuel SUPPLY CORPORATION	ENGINEERING DEPT. 1100 STATE STREET P.O. BOX 2081 ERIE, PA. 16512 (814) 871-8676	DRAWN BY: L. A. PHILLIPS FILENAME: NFGSC\BMP38.dwg DATE: 04/04/2005	RIGHT-OF-WAY CROWNING	DRAWING NUMBER: 38

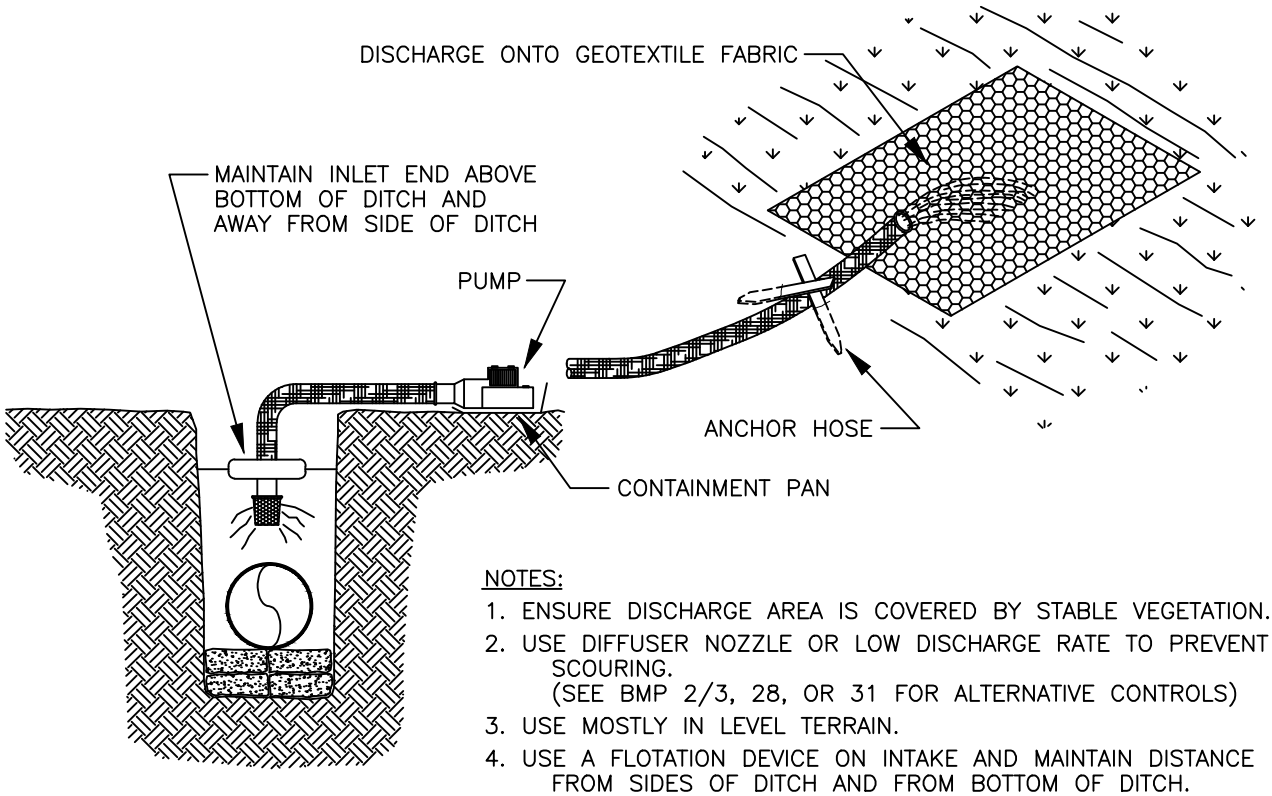

NOTES:

1. ENSURE DISCHARGE AREA IS COVERED BY STABLE VEGETATION.
2. USE DIFFUSER NOZZLE OR LOW DISCHARGE RATE TO PREVENT SCOURING.
   (SEE BMP 2/3, 28, OR 31 FOR ALTERNATIVE CONTROLS)
3. USE MOSTLY IN LEVEL TERRAIN.
4. USE A FLOTATION DEVICE ON INTAKE AND MAINTAIN DISTANCE FROM SIDES OF DITCH AND FROM BOTTOM OF DITCH.

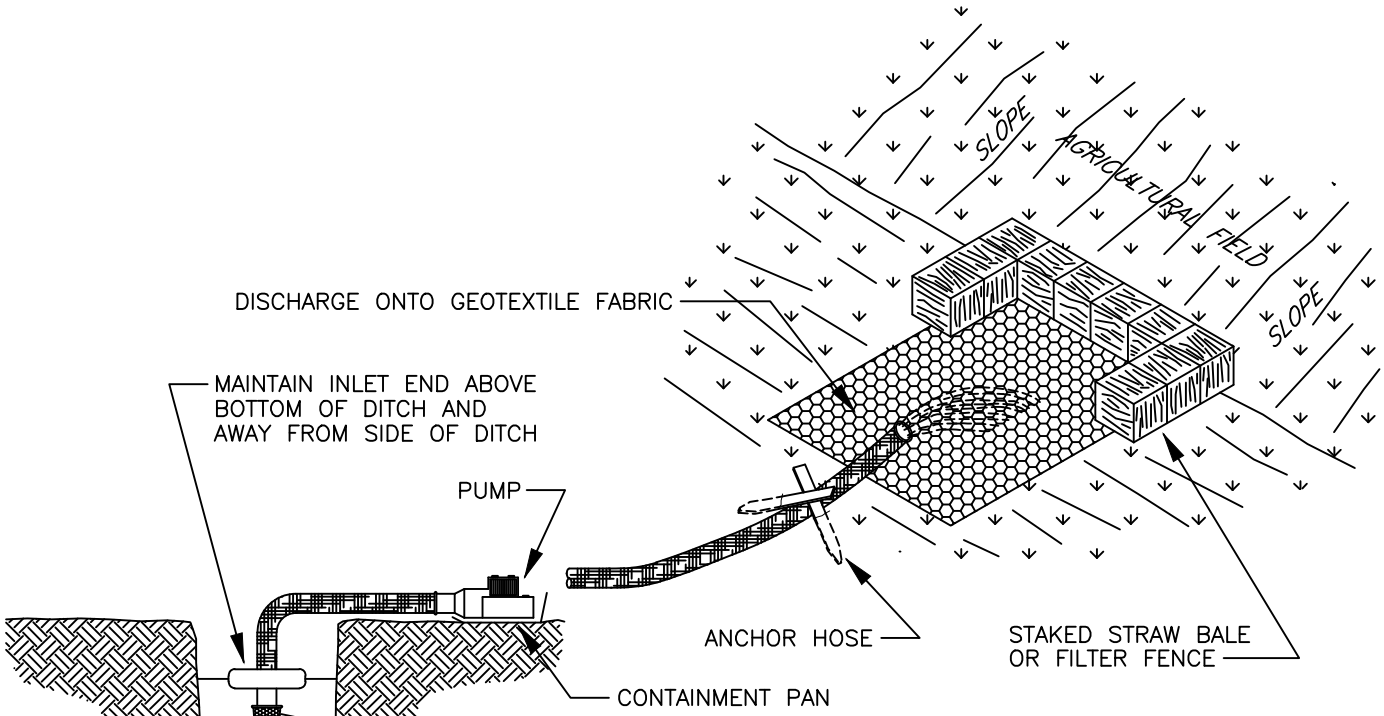

NOTES:

1. USE ON SLOPING TERRAIN OR IN AREA WITH EROSION PRONE SOILS.
2. USE DIFFUSER NOZZLE OR LOW DISCHARGE RATE TO PREVENT SCOURING.
3. ADDITIONAL STRAW BALES MAY BE USED TO INCREASE RETENTION AND FILTERING.
   (SEE BMP 2/3, 28, OR 31 FOR ALTERNATIVE CONTROLS)
4. USE A FLOTATION DEVICE ON INTAKE AND MAINTAIN DISTANCE FROM SIDES OF DITCH AND FROM BOTTOM OF DITCH.

national Fuel SUPPLY CORPORATION	ENGINEERING DEPT. 1100 STATE STREET P.O. BOX 2081 ERIE, PA. 16512 (814) 871-8676	DRAWN BY: L. A. PHILLIPS FILENAME: EPC\BMP39.dwg LAST REVISION DATE: 06/27/2007	DISCHARGE METHOD FOR TRENCH DEWATERING	DRAWING NUMBER: 39

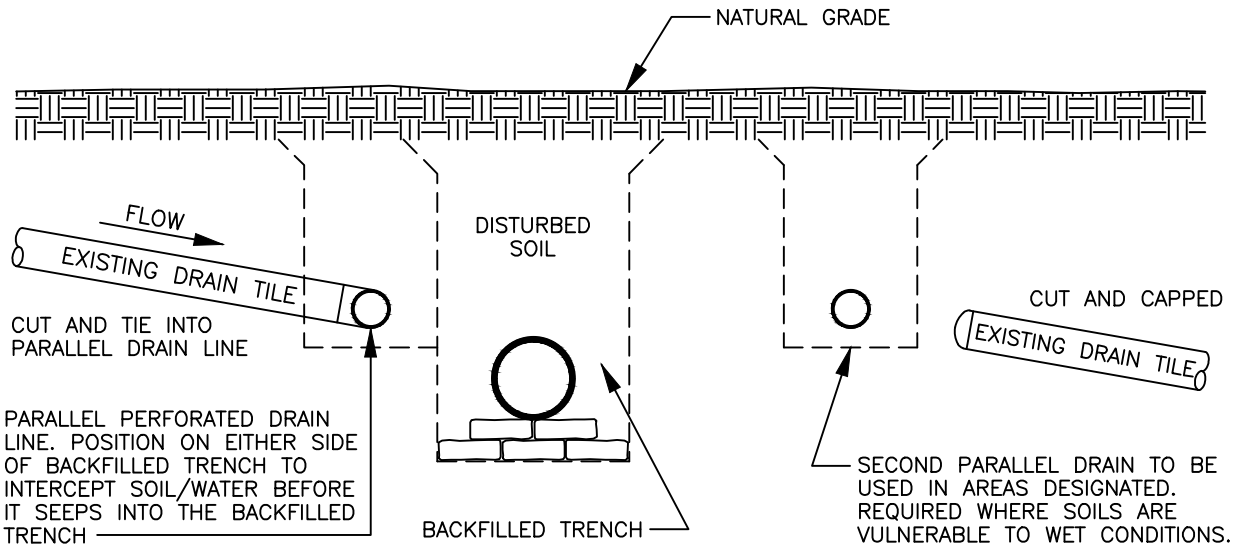

NOTE:

1. PARALLEL DRAINAGE TILE INSTALLATION TO BE APPROVED FOR SITE SPECIFIC AGRICULTURAL SOILS WHERE REPAIR OF EXISTING CROSS TILES WOULD BE LESS EFFECTIVE FOR EXAMPLE:
   A. SHALLOW BEDROCK.
   B. INTERFERENCE BY OTHER UTILITY LINES.
   C. TO HEADER CLOSELY SPACED SHALLOW TILES AND FRENCH DRAINS.
2. PARALLEL/NEW SUBMAIN TILE INSTALLATION MUST ACCOUNT FOR THE ISSUE OF LONG–TERM ROW SATURATION; AND MUST BE APPROVED BY THE AGRICULTURAL DRAINAGE SPECIALIST.

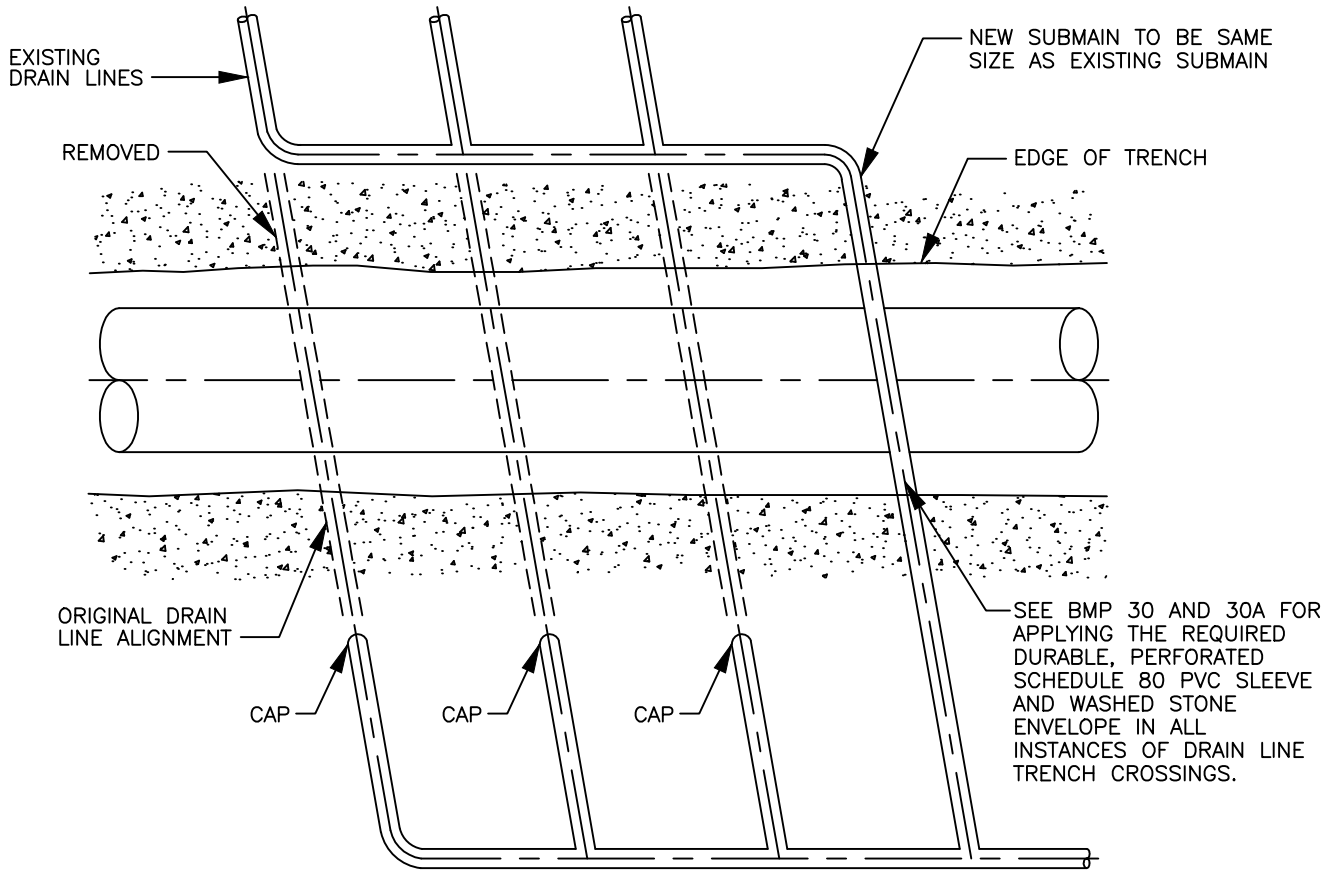

PLAN VIEW TILE SYSTEM WITH NEW SUBMAIN

national Fuel SUPPLY CORPORATION	ENGINEERING DEPT. 1100 STATE STREET P.O. BOX 2081 ERIE, PA. 16512 (814) 871–8676	DRAWN BY: L. A. PHILLIPS FILENAME: EPC\BMP40.dwg DATE: 05/11/2006	PARALLEL/NEW SUBMAIN TILE INSTALLATION	DRAWING NUMBER: 40

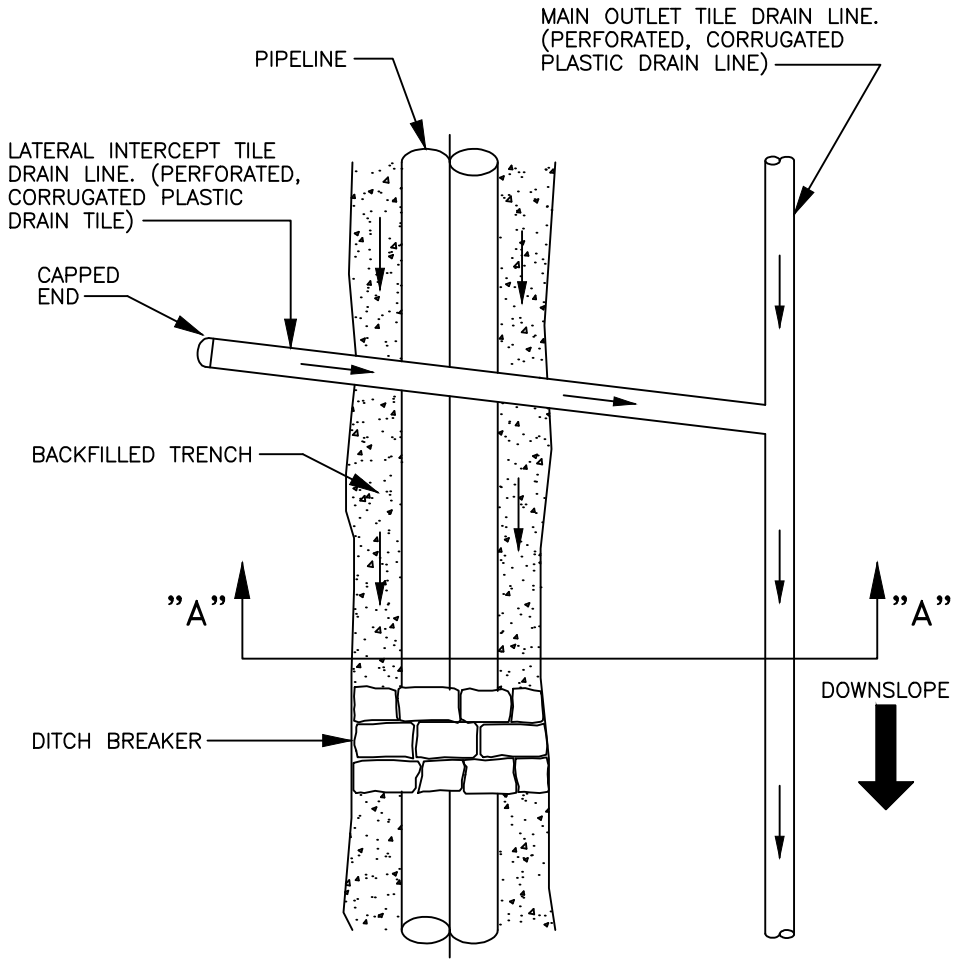

PLAN

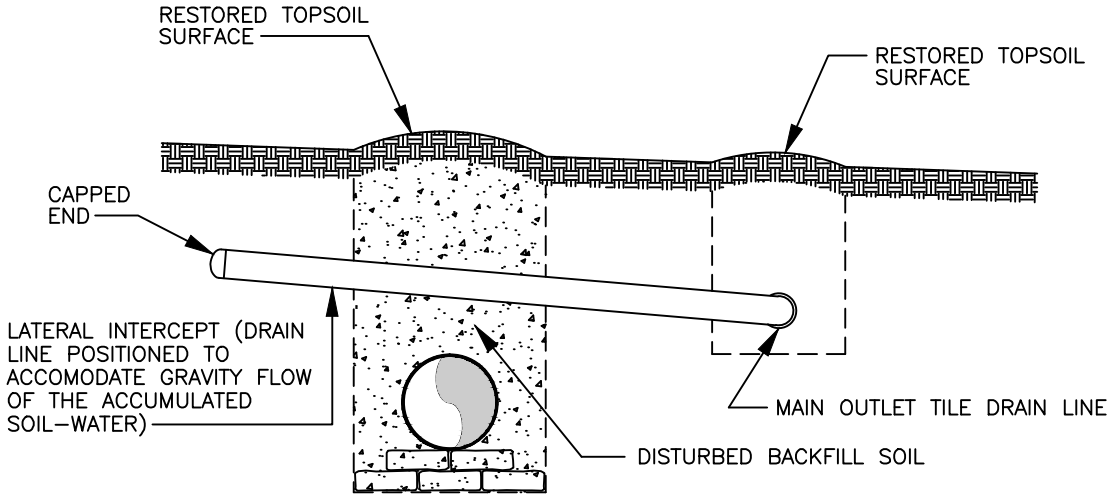

PROFILE – SECTION "A"–"A"

NOTES:

1. DITCH BREAKERS PREVENT GULLY EROSION WHILE TRENCH IS OPEN AND HELP INHIBIT WATER PIPING AND WATER BLOWOUTS DOWN THE COURSE OF THE PIELINE AFTER BACKFILLING.
2. INTERCEPT DRAIN LINES ABSORB THE SOIL AND WATER WHICH DRAIN NATURALLY FROM THE UNDISTURBED SOIL PROFILE INTO THE DISTURBED BACKFILL SOIL MATERIAL OF THE TRENCH. THE INTERCEPT DRAIN LINES HELP PREVENT SATURATED SOIL CONDITIONS.
3. AGRICULTURAL CROPLAND MAY REQUIRE CROSS TRENCH DRAINAGE OR PARALLEL DRAINAGE.

national Fuel SUPPLY CORPORATION	ENGINEERING DEPT. 1100 STATE STREET P.O. BOX 2081 ERIE, PA. 16512 (814) 871–8676	DRAWN BY: L. A. PHILLIPS FILENAME: NFGSC\BMP41.dwg DATE: 04/08/2005	LATERAL INTERCEPT DRAIN	DRAWING NUMBER: 41

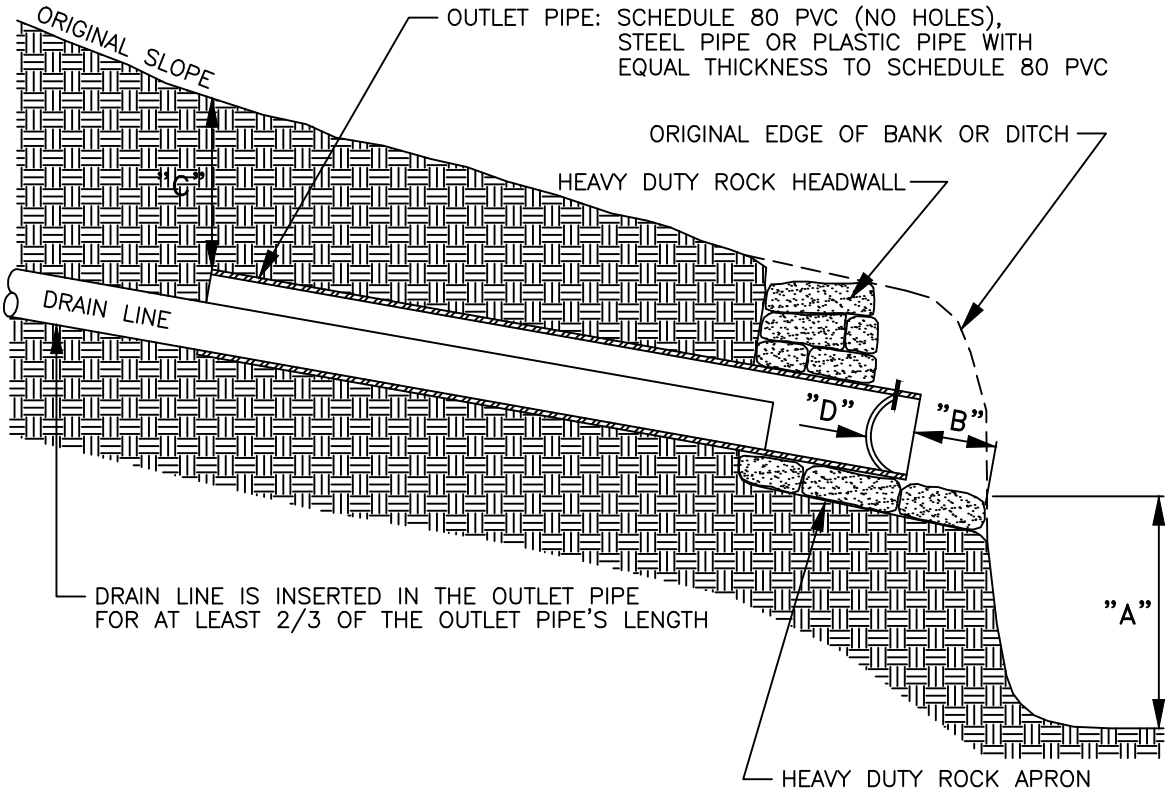

"A" – THE FREE DROP OR OUTFALL DISTANCE OF THE DRAINAGE WATER TO ITS UNRESTRICTED (FREE) DAYLIGHT OUTLET. GUIDELINE IS 2 FEET BUT NOT LESS THAN 1 FOOT WITHOUT SPECIAL DESIGN APPROVAL.

"B" – THE RECESS BACK FROM THE EDGE OF THE BANK OR DITCH OR OTHER POINT OF DAYLIGHT. GUIDLINE IS 2 FEET RECESSED BACK TO AVOID FUTURE DAMAGE.

"C" – THE MINIMUM DEPTH OF COVER OVER THE DRAIN LINE AT WHICH THE OUTLET PIPE MUST BEGIN. THE MINIMUM IS 2 FEET.

"D" – AN INTERNALLY HINGED ANIMAL (RODENT) GUARD, BOLTED FROM THE OUTSIDE. MOUNT THE GUARD 4"–6" BACK INSIDE THE OUTLET PIPE.

National Fuel SUPPLY CORPORATION	ENGINEERING DEPT. 1100 STATE STREET P.O. BOX 2081 ERIE, PA. 16512 (814) 871–8676	DRAWN BY: L. A. PHILLIPS FILENAME: EPC\BMP42.dwg DATE: 06/24/2005	TYPICAL DRAIN TILE OUTLET	DRAWING NUMBER: 42

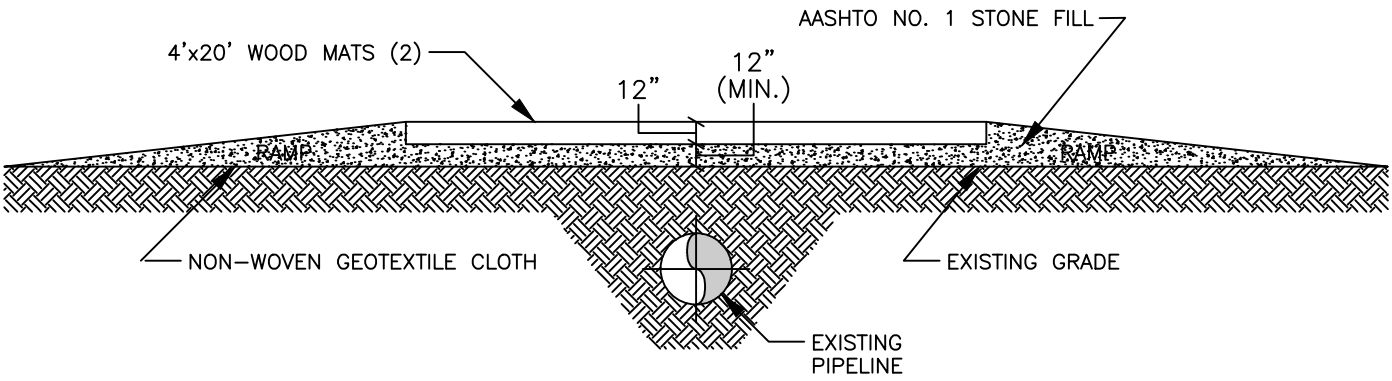

N O T E S
1. ADDITIONAL STONE DEPTH MAY BE REQUIRED – CONTACT ENGINEERING.
2. WOOD MATS WILL BE SUPPLIED AND INSTALLED BY THE CONTRACTOR.
3. STONE FILL TO BE SUPPLIED AND INSTALLED BY THE CONTRACTOR. INSTALL 1 (ONE) LAYER OF NON-WOVEN GEOTEXTILE CLOTH PRIOR TO INSTALLING THE STONE.
4. ADDITIONAL MATS, IF NEEDED, WILL BE SUPPLIED AND INSTALLED BY THE CONTRACTOR.

SPECIAL NOTE:

PROPOSED VEHICLE & EQUIPMENT WHEEL / TRACK LOAD WEIGHTS SHALL BE PROVIDED TO NFG ENGINEERING SERVICES TO DETERMINE IF ADDITIONAL MEASURES ARE NECESSARY BASED ON THE SPECIFIC PIPELINE TO BE CROSSED.

national Fuel SUPPLY CORPORATION	ENGINEERING DEPT. 1100 STATE STREET P.O. BOX 2081 ERIE, PA. 16512 (814) 871-8676	DRAWN BY: L. A. PHILLIPS FILENAME: NFGSC\BMP43.dwg REVISED DATE: 02/21/2012	TEMPORARY WOODEN MAT PIPELINE CROSSING	DRAWING NUMBER: 43

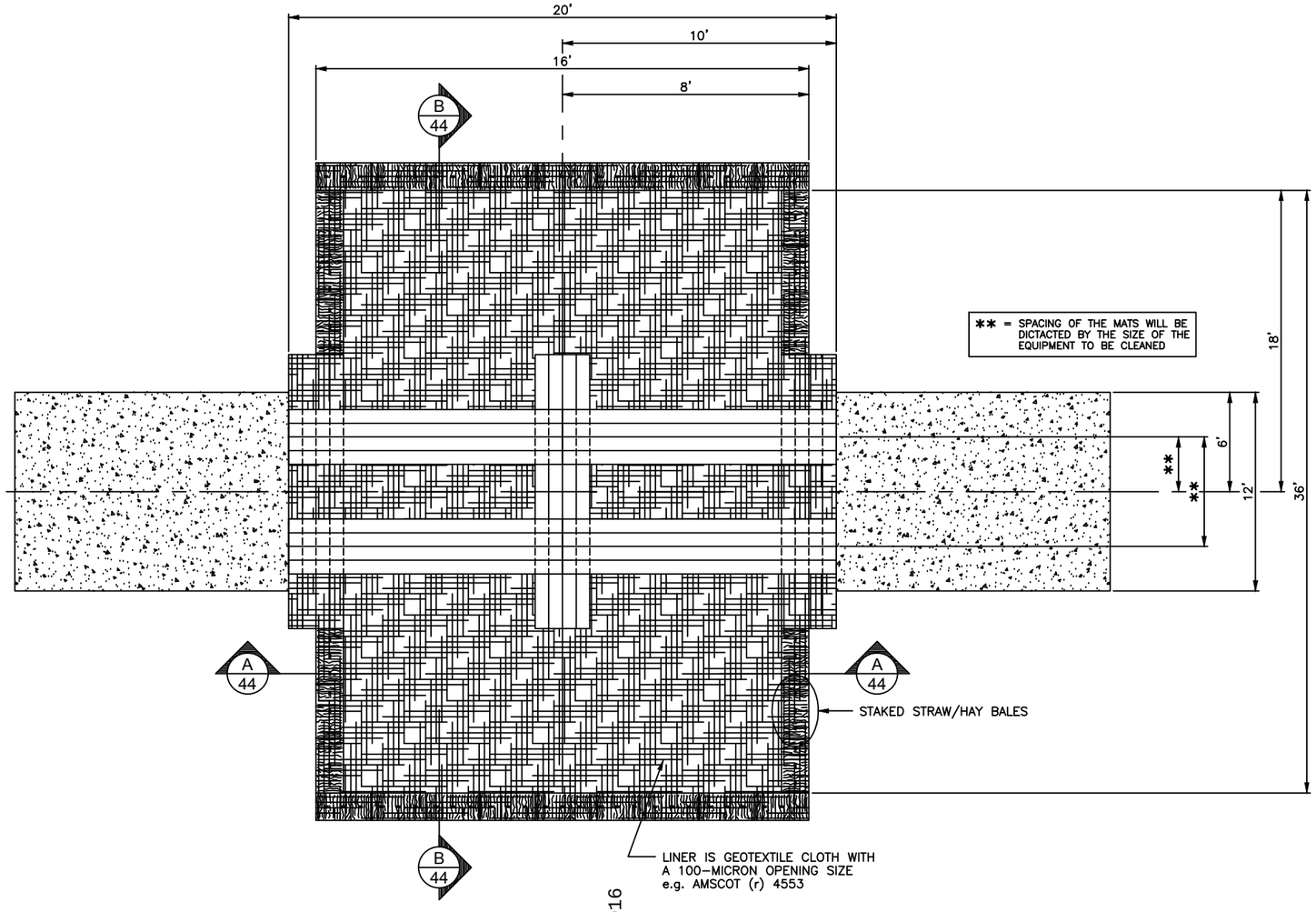

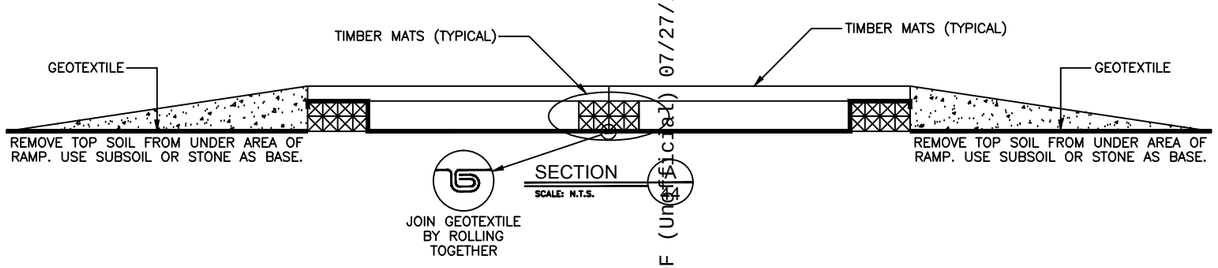

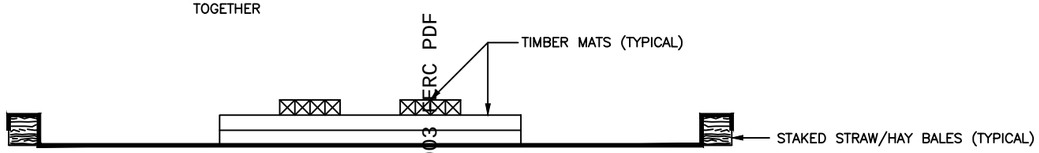

NOTES:

1. WASH STATION MUST BE WITHIN THE ENVIRONMENTALLY CLEARED RIGHT-OF-WAY AND OUTSIDE THE 100' WETLAND BUFFER ZONE.
2. IF WASH STATION IS IN AGRICULTURAL LANDS, REMOVE THE TOPSOIL AND STOCKPILE. BEFORE THE TOPSOIL IS REPLACED, THE SUBSOIL MUST BE DECOMPACTED AND ROCKS REMOVED. THE TOPSOIL MOISTURE MUST PASS THE ATTERBERG TEST PRIOR TO SPREADING THE TOPSOIL.
3. THE LOCATION OF THE PUMPING EQUIPMENT, WATER SUPPLY AND SPRAY EQUIPMENT WILL BE DICTATED BY THE LOCATION OF THE WASH STATION.
4. AFTER THE EQUIPMENT WASHING IS COMPLETE, FOLD OR ROLL THE GEOTEXTILE (CAUTION WILL BE EXERCISED NOT TO SPILL ANY OF THE CONTAINED MATERIAL) AND REMOVE TO AN APPROPRIATE DISPOSAL SITE. REMOVE THE CLEANING EQUIPMENT, RAMPS AND STRAW/HAY BALES AND COMPLETE THE CLEANUP.

20160727-4003 FERC PDF (Unofficial) 07/27/2016

national Fuel SUPPLY CORPORATION	DRAWN BY: L. A. PHILLIPS FILENAME: NFGSC\BMP44.dwg DATE: 05/03/2007	ELEVATED WASHRACK	DRAWING NUMBER: 44

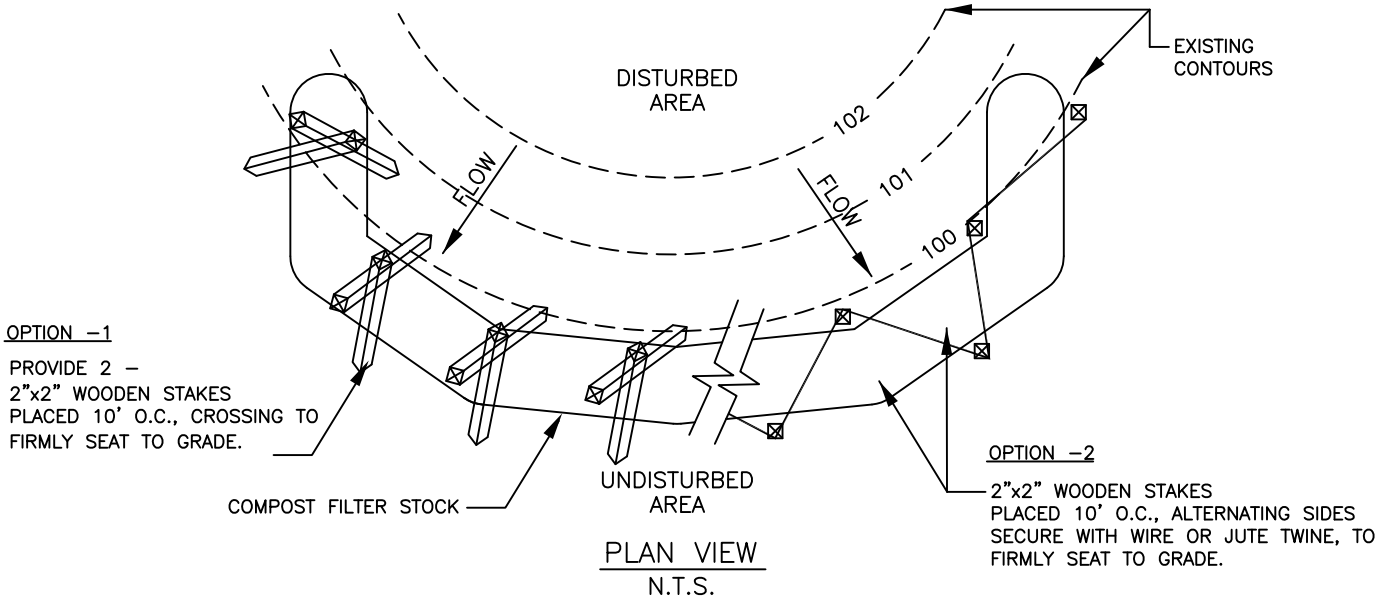

PLAN VIEW
N.T.S.

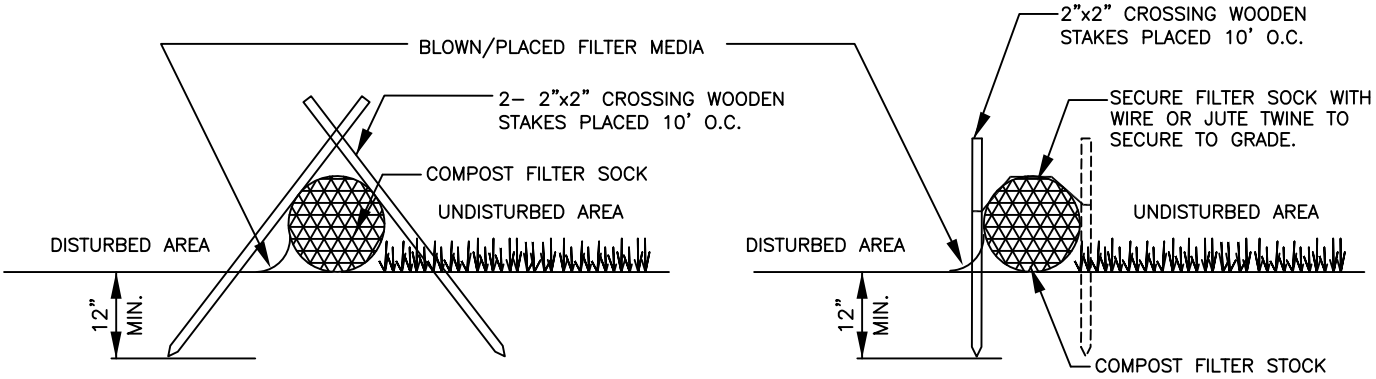

SECTION VIEW–CROSSING STAKE OPTION
N.T.S.

SECTION VIEW–ALTERNATING STAKE OPTION
N.T.S.

Adapted from Filtrexx

Sock fabric shall meet standards of Table 4.1.
Compost shall meet the following standards:

Oganic Matter Content	80% – 100% (dry weight basis)
Organic Portion	Fibrous and elongated
pH	5.5 – 8.0
Moisture Content	35% – 55%
Particle Size	98% pass through 1" screen
Soluable Salt Concentration	5.0 dS Maximum

Compost Filter Sock shall be placed at existing level grade. Both ends of the sock shall be extended at least 8 feet up slope at 45 degrees to the main sock alignment (see Figure 4.1). Maximum slope length above any sock shall not exceed that shown on Figure 4.2.

Traffic shall not be permitted to cross filter socks.

Accumulated Sediment shall be removed when it reaches 1/2 the above ground height of the sock and disposed in the manner described elsewhere in the plan.

Socks shall be inspected weekly and after each runoff event. Damaged socks shall be repaired according to manufacturer's specifications or replaced within 24 hours of inspection.

Biodegradable filter sock shall be replaced after 6 months; photodegradable socks after 1 year. Polypropylene socks shall be placed according to manufacturer's recommendations.

Upon stabilization of the disturbed area to the sock, stakes shall be removed. The sock may be left in place and vegetated or removed. In the latter case, the mesh shall be cut open and the mulch spread as a soil pupplement, dispose of mesh.

National Fuel SUPPLY CORPORATION	ENGINEERING DEPT. 1100 STATE STREET P.O. BOX 2081 ERIE, PA. 16512 (814) 871–8676	DRAWN BY: L. A. PHILLIPS FILENAME: NFGSC\BMP45a.dwg DATE: 12/09/2013	COMPOST FILTER SOCK (FOR PENNSYLVANIA USE)	DRAWING NUMBER: 45A SHEET 1 OF 3

REVIEWED: 01/2014

Compost Filter Sock

Sediment Removal Efficiency: HIGH. This devise is an ABACT (Antidegradation Best Available Combination of Technologies) for HQ and EV watersheds.

Compost filter socks are a type of contained compost filter berm. They consist of a biodegradable or photodegradable mesh tube filled (typically using a pneumatic blower) with a coarse compost filter media that meets certain performance criteria (e.g. hydraulic flow through rate, total solids removal efficiency, total suspended solids removal efficiency, turbidity reduction, nutrient removal efficiency, metals removal efficiency, and motor oil removal efficiency).

Filter socks are flexible and can be filled in place or filled and moved into position. They are especially useful on steep slopes. Heavy vegetation should be removed prior to installing the sock. Filter socks can also be used on rocky slopes if sufficient preparation is made to ensure good contact of the sock with the underlying soil along its entire length. They may also be used on pavement as a perimeter control. Socks used in this manner range in diameter from 8" to 32". **Note:** Some settlement of the tube typically occurs after installation. The diameter of the sock tube is the dimension to be used for slope design purposes (Figure 4.2). Socks with diameters less than 12" should only be used for residential housing lots of ½ acre or less that are a branch to a sediment basin or sediment trap.

As with other sediment barriers, filter socks must be placed parallel to contour with both ends of the sock extended upslope at a 45-degree angle to the rest of the sock to prevent end-arounds (See Figure 4.1). Socks placed on earthen slopes should be anchored with stakes driven through the center of the sock (see Standard Construction Detail 4-1) at intervals recommended by the manufacturer. Where socks are placed on paved surfaces, concrete blocks should be used immediately down-slope of the socks to help hold the sock in place.

The maximum slope length above a filter sock should not exceed those shown in Figure 4.2.

The anticipated functional life of a biodegradable filter sock should be 6 months; for photodegradable socks 1 year. Projects with anticipated disturbances lasting longer than the functional life of a sock should plan to replace the socks periodically or use another type of BMP.

Upon stabilization of the disturbed area, the filter sock may be left in place and vegetated or removed. In the latter case, the mesh is typically cut open and the compost/mulch spread as a soil supplement, the mesh is removed from the site and disposed of.

Filter socks using other fillers may be approved on a case-by-case basis if sufficient supporting information (including manufacturer's specs and independent test data) is provided.

national Fuel SUPPLY CORPORATION	ENGINEERING DEPT. 1100 STATE STREET P.O. BOX 2081 ERIE, PA. 16512 (814) 871-8676	DRAWN BY: L. A. PHILLIPS FILENAME: NFGSC\BMP45b.dwg DATE: 03/11/2010	COMPOST FILTER SOCK	DRAWING NUMBER: 45B SHEET 2 OF 3

TABLE 4.1
Compost Sock Fabric Minimum Specifications

Material Type	**5 mil HDPE**	**5 mil HDPE**
Material Characteristics	Bio-degradable	Photo-degradable
Sock Diameters	12-inch 18-inch 24-inch 32-inch	12-inch 18-inch 24-inch 32-inch
Mesh Opening	3/8"	3/8"
Tensile Strength	26 psi	26 psi
Ultraviolet Stability % Original Strength (ASTM G-155)	-----	23% at 1000 hr.
Minimum Functional Longevity	6 months	9 months
Two-ply Systems		
Inner Containment Netting	HDPE biaxial net	
	Continuously wound	
	Fusion-welded junctures	
	3/4" x 3/4" Max. aperture size	
Outer Filtration Mesh	Composite Polypropylene Fabric (Woven layer & non-woven fleece Mechanically fused via needle punch)	
	3/16" Max. aperture size	
Sock fabrics composed of burlap may be used on projects lasting 6 months or less.		

FIGURE 4.2

Maximim Permissible Slope Lengths Above Compost Filter Socks

12-inch Sock Diameter		18-inch Sock Diameter	
Maximum Slope Length (ft)	**Percent Slope**	**Maximum Slope Length (ft)**	**Percent Slope**
520	2	700	2
210	5	340	5
170	10	240	10
120	15	200	15
90	20	140	20
60	25	100	25
45	30	80	30
40	35	60	35
35	40	50	40
30	45	30	45
25	50	20	50

national Fuel SUPPLY CORPORATION	ENGINEERING DEPT. 1100 STATE STREET P.O. BOX 2081 ERIE, PA. 16512 (814) 871-8676	DRAWN BY: L. A. PHILLIPS FILENAME: NFGSC\BMP45c.dwg DATE: 03/11/2010	COMPOST FILTER SOCK	DRAWING NUMBER: 45C SHEET 3 OF 3

PLAN VIEW

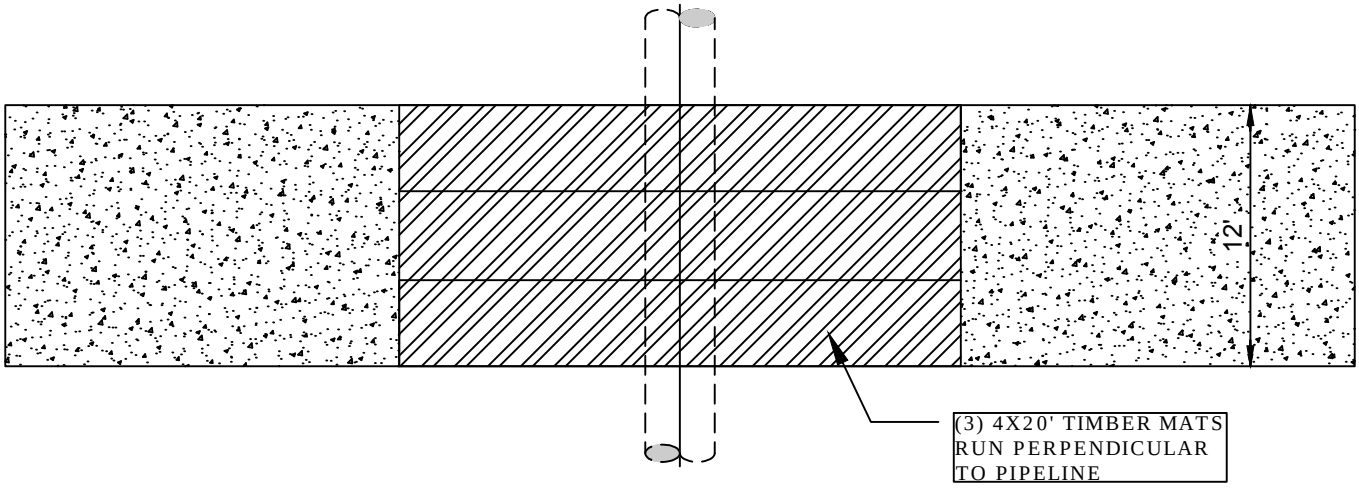

SIDE VIEW

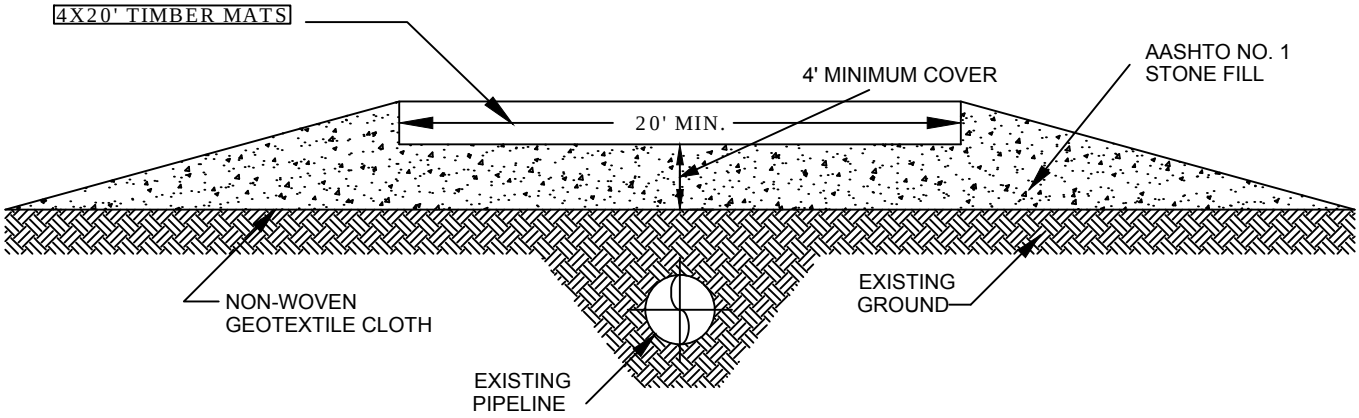

National Fuel SUPPLY CORPORATION	STONE PIPELINE CROSSING WITH TIMBER MATTING BMP 46		
ENGINEERING DEPARTMENT GEOMATICS SECTION 1100 STATE STREET ERIE, PENNSYLVANIA 16501	DATE: 09/27/2011	DRAWN BY: Gary Hoffacker	APPROVED BY: M. P. WALLACE
	SCALE: N.T.S.	FILENAME: BMP46.DWG	

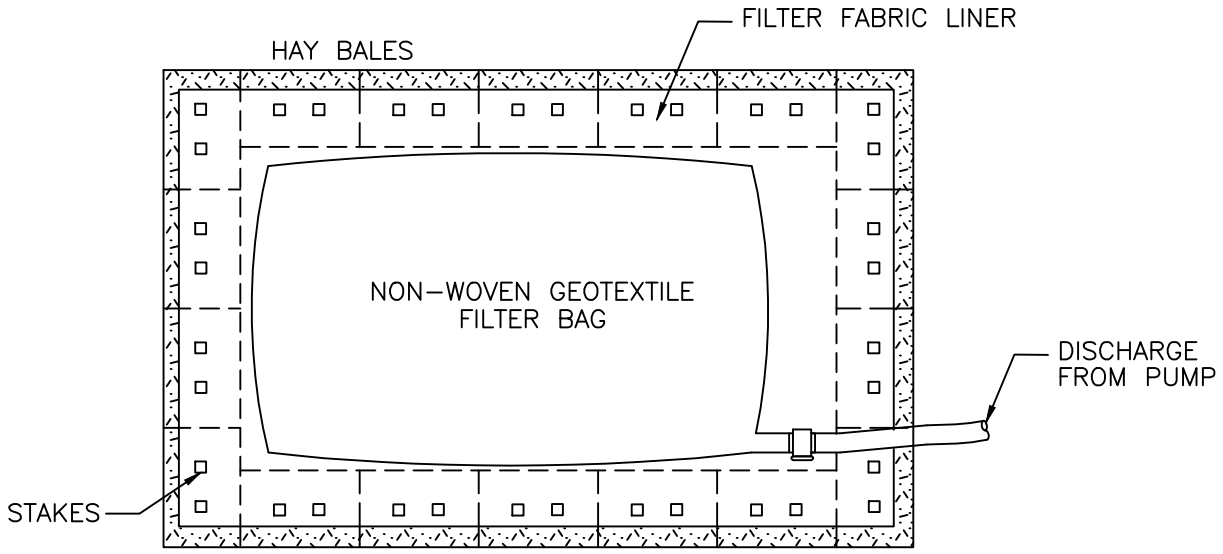

PLAN VIEW

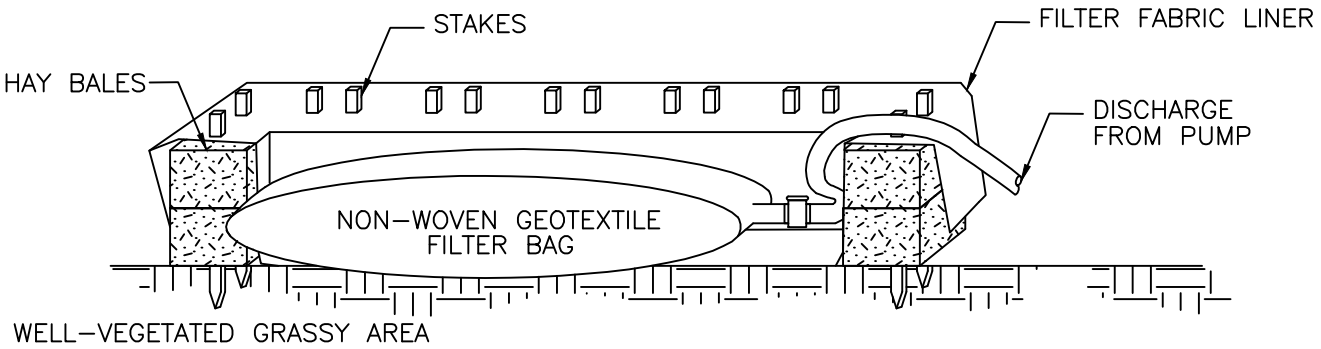

ELEVATION VIEW

NOTES:

1. RECTANGULAR DETWATERING DISCHARGE AREA CONSTRUCTED OUT OF HAY BALES STACKED ONE OR TWO ROWS HIGH AND SECURED WITH WOODEN STAKES (SEE BMP 22 FOR HAY BALE INSTALLATION).
2. FILTER FABRIC LINER INSTALLED COVERING ENTIRE INTERIOR OF STRUCTURE AND SECURED ATOP THE HAY BALES WITH WOODEN STAKES.
3. DEWATERING DEVICE SHALL BE LOCATED IN WELL–VEGETATED (GRASSY) AREA AND DISCHARGE ONTO STABLE, EROSION RESISTANT AREAS. WHERE THIS IS NOT POSSIBLE, A GEOTEXTILE FLOW PATH SHALL BE PROVIDED. DISCHARGE DEVICE SHALL NOT BE PLACED ON SLOPES GREATER THAN 5%.
4. SEE BMP 28 FOR DEWATERING FILTER BAG DETAILS.
5. FOR LESS TURBID WATER DISCHARGE GEOTEXTILE FILTER BAG IS OPTIONAL AND STRUCTURE MAY UTILIZE JUST FILTER FABRIC LINER.

national Fuel SUPPLY CORPORATION	ENGINEERING DEPT. 1100 STATE STREET P.O. BOX 2081 ERIE, PA. 16512 (814) 871–8676	DRAWN BY: L. M. TELESCA FILENAME: BMPs\BMP47.dwg DATE: 09/13/2010	TRENCH DEWATERING SEDIMENT CORRAL	DRAWING NUMBER: 47

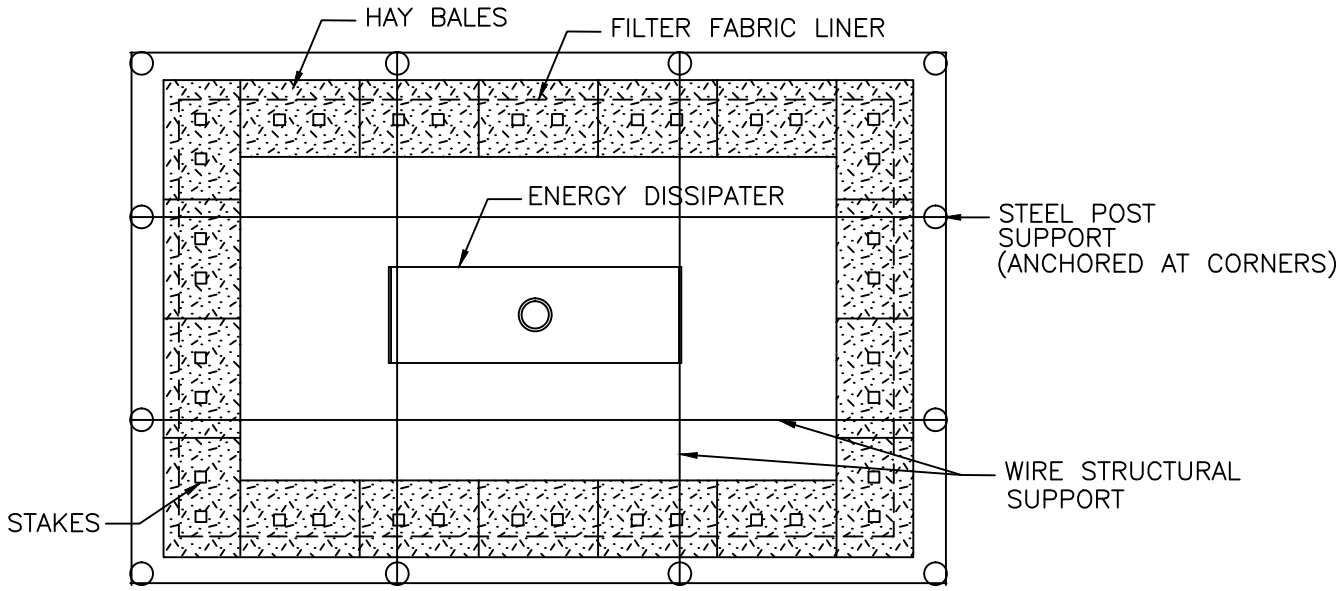

PLAN VIEW

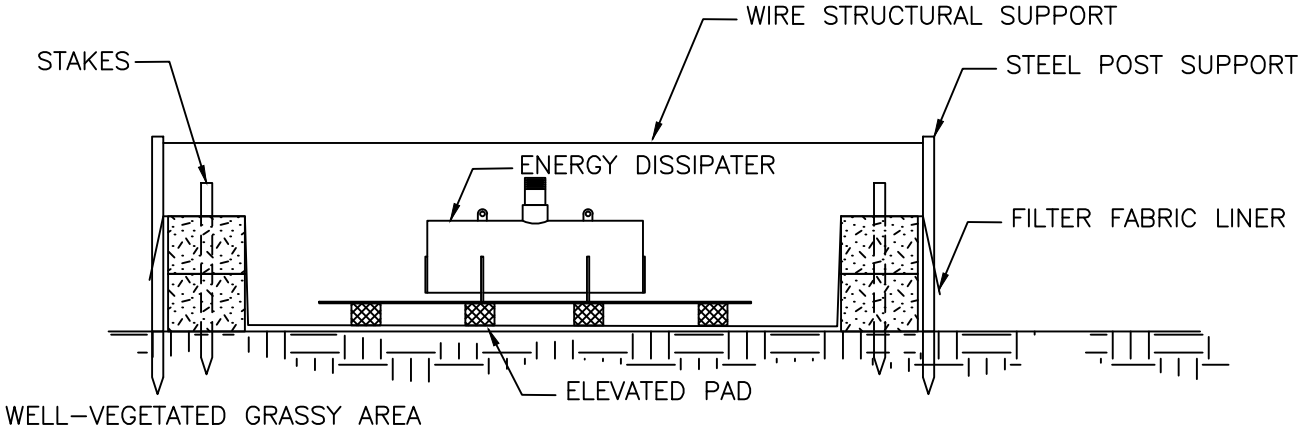

ELEVATION VIEW

NOTES:

1. RECTANGULAR DETWATERING DISCHARGE AREA CONSTRUCTED OUT OF HAY BALES STACKED TWO HIGH SECURED WITH WOODEN STAKES (SEE BMP 22 FOR HAY BALE INSTALLATION) AND WIRED (STEEL) POSTS.
2. FILTER FABRIC LINER INSTALLED COVERING ENTIRE INTERIOR OF STRUCTURE AND SECURED BETWEEN THE HAY BALES WITH WOODEN STAKES.
3. DEWATERING DEVICE SHALL BE LOCATED IN WELL-VEGETATED (GRASSY) AREA AND DISCHARGE ONTO STABLE, EROSION RESISTANT AREAS. WHERE THIS IS NOT POSSIBLE, A GEOTEXTILE FLOW PATH SHALL BE PROVIDED. DISCHARGE DEVICE SHALL NOT BE PLACED ON SLOPES GREATER THAN 5%.
4. SEE BMP 3 FOR ENERGY DISSIPATER DETAILS.

national Fuel SUPPLY CORPORATION	ENGINEERING DEPT. 1100 STATE STREET P.O. BOX 2081 ERIE, PA. 16512 (814) 871-8676	DRAWN BY: L. M. TELESCA FILENAME: BMPs\BMP48.dwg DATE: 09/13/2010	HYDROTEST WATER DISCHARGE DEVICE	DRAWING NUMBER: 48

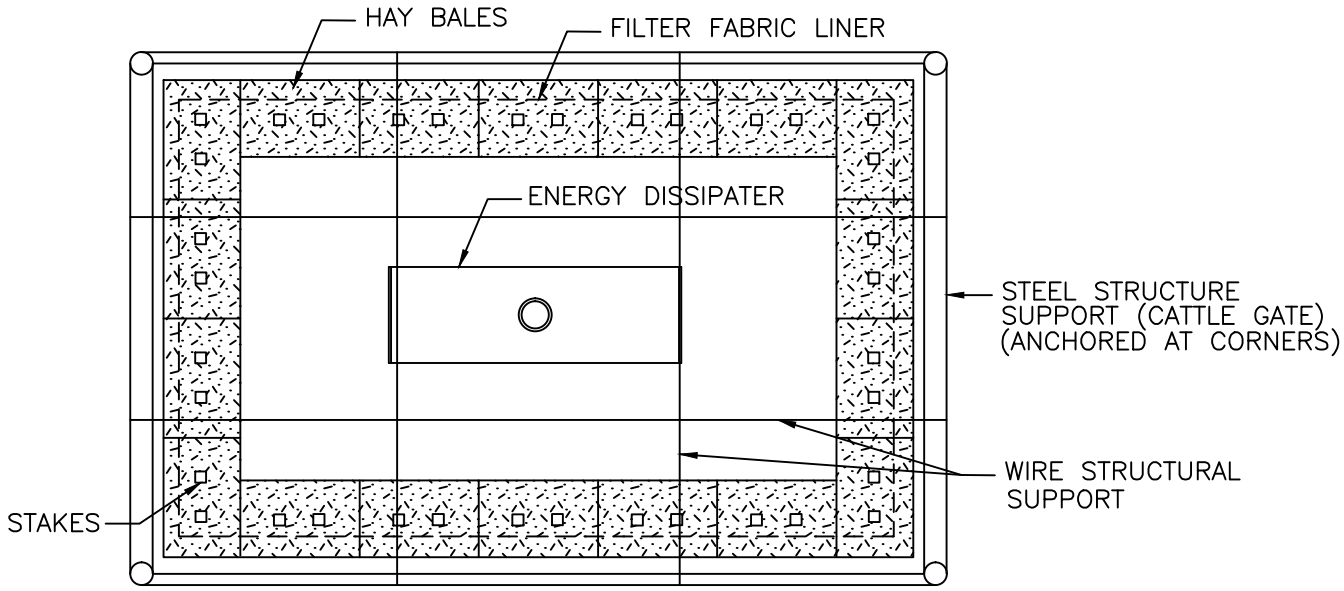

PLAN VIEW

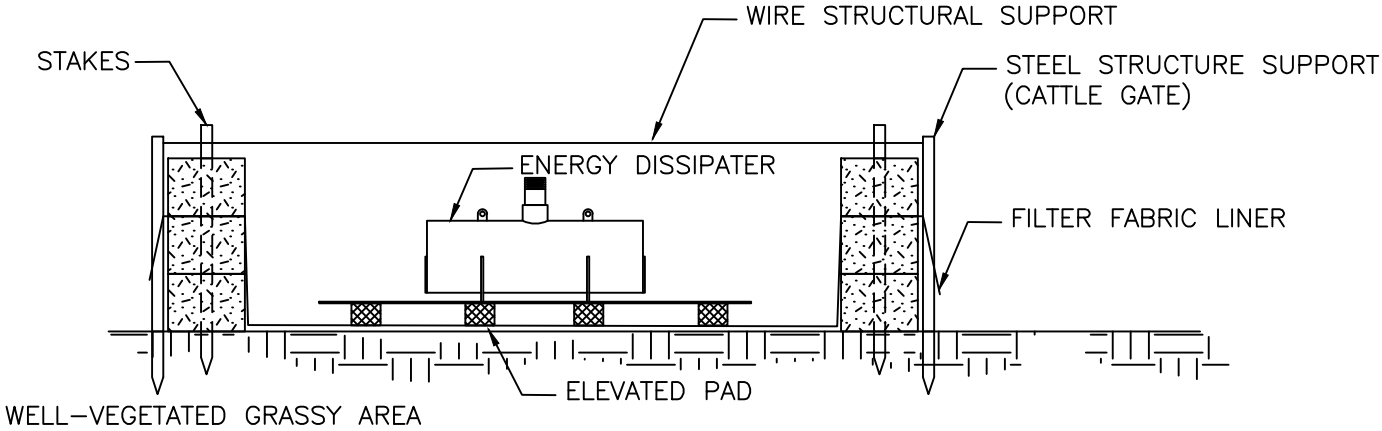

ELEVATION VIEW

NOTES:

1. RECTANGULAR DETWATERING DISCHARGE AREA CONSTRUCTED OUT OF HAY BALES STACKED THREE HIGH SECURED WITH WOODEN STAKES (SEE BMP 22 FOR HAY BALE INSTALLATION) AND WIRED (STEEL) CATTLE GATES.
2. FILTER FABRIC LINER INSTALLED COVERING ENTIRE INTERIOR OF STRUCTURE AND SECURED BETWEEN THE HAY BALES WITH WOODEN STAKES.
3. DEWATERING DEVICE SHALL BE LOCATED IN WELL–VEGETATED (GRASSY) AREA AND DISCHARGE ONTO STABLE, EROSION RESISTANT AREAS. WHERE THIS IS NOT POSSIBLE, A GEOTEXTILE FLOW PATH SHALL BE PROVIDED. DISCHARGE DEVICE SHALL NOT BE PLACED ON SLOPES GREATER THAN 5%.
4. SEE BMP 3 FOR ENERGY DISSIPATER DETAILS.

national Fuel SUPPLY CORPORATION	ENGINEERING DEPT. 1100 STATE STREET P.O. BOX 2081 ERIE, PA. 16512 (814) 871–8676	DRAWN BY: L. M. TELESCA FILENAME: BMPs\BMP48.dwg DATE: 09/13/2010	LARGE VOLUME HYDROTEST WATER DISCHARGE DEVICE	DRAWING NUMBER: 48a

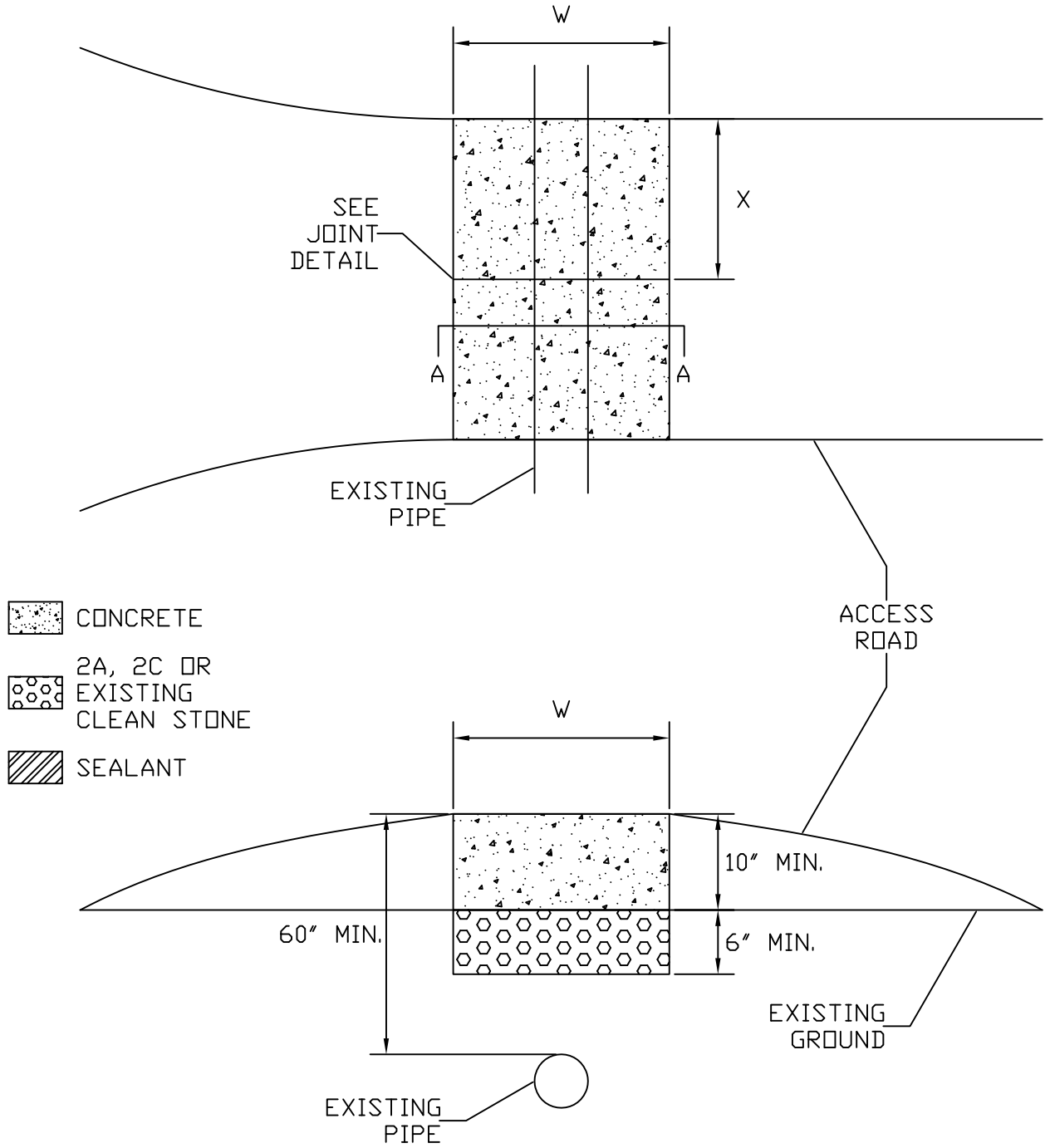

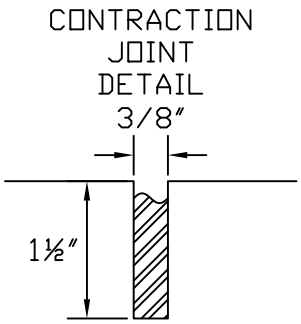

GENERAL NOTES

W=6′+OD+6′ (15′ MIN)
X=PUT JOINT ON ℄ OR EVERY W×1.5

REFER TO C,S&P MANUAL SECTION 16 FOR CONCRETE PLACEMENT AND CURING INFORMATION

national Fuel SUPPLY CORPORATION	ENGINEERING DEPT. 1100 STATE STREET P.O. BOX 2081 ERIE, PA. 16512 (814) 871-8676	DRAWN BY: B. MCSHANE FILENAME: BMP49.dwg LAST REVISION DATE: 01/17/2014	CONCRETE SLAB PIPE PROTECTION DETAIL	DRAWING NUMBER: 49

DIVERSION TERRACE TIMBER MAT BRIDGE SIDE VIEW

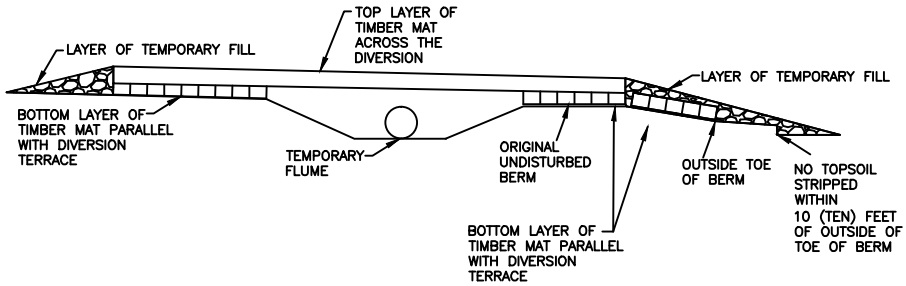

TOP VIEW OF DIVERSION BERM REPAIR AND TIMBER MAT BRIDGE

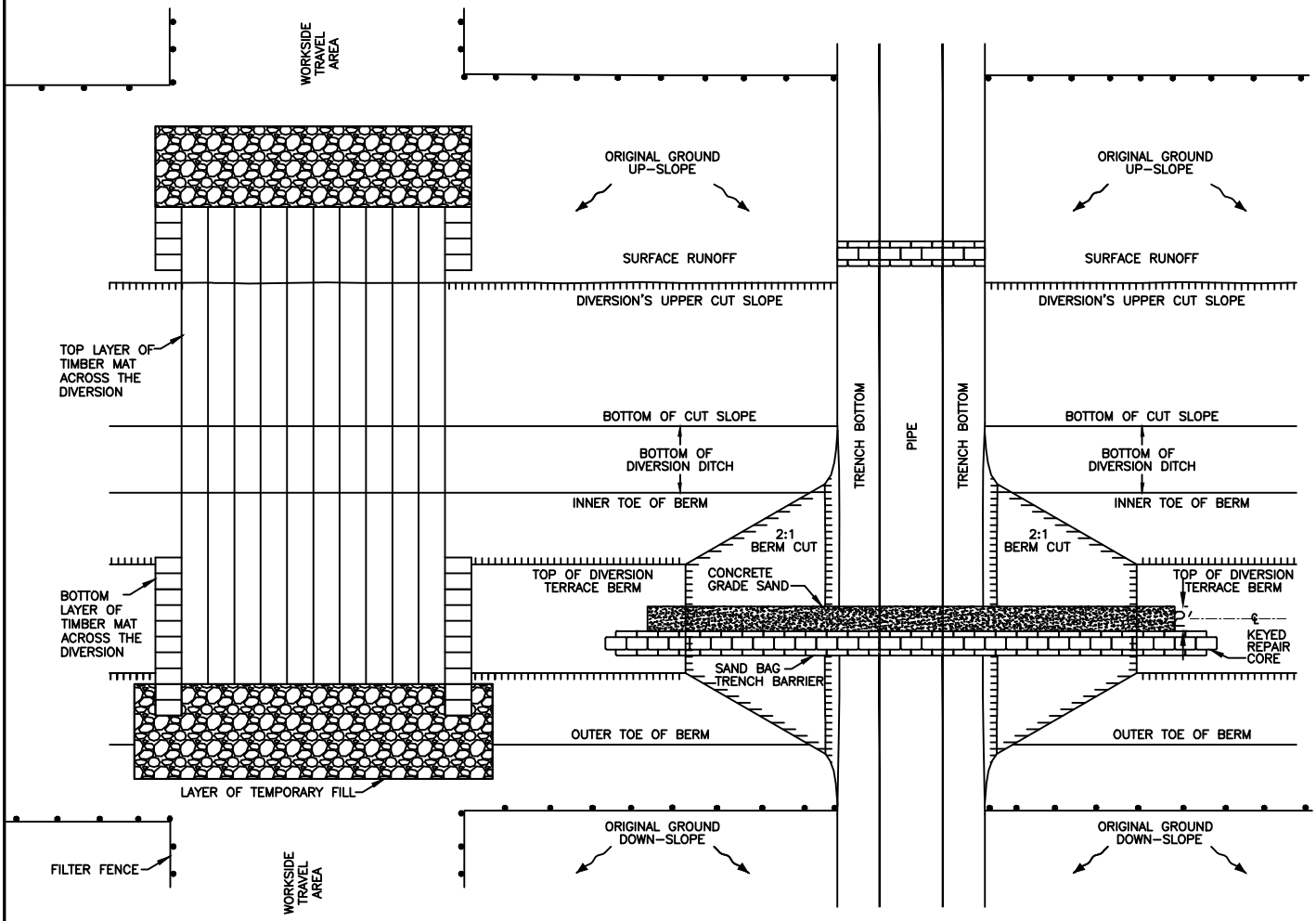

NOTES:

1. THE ONLY PORTION OF DIVERSION TO BE DISTURBED IS THE PIPELINE TRENCH AND THE 2:1 BERM CUT, DURING CONSTRUCTION; AND THE BERM'S KEYED-IN REPAIR CORE DURING THE RECONSTRUCTION OF THE DIVERSION TERRACE.
2. ALL OTHER ORIGINAL FEATURES OF THE DIVERSION TERRACE ARE PROTECTED THROUGHOUT THE RIGHT OF WAYS CONSTRUCTION AND RESTORATION STAGES OF WORK AND ACCESS BT TEMPORARY FILL LAYERS AND TIMBER BRIDGING.
3. A TEMPORARY FLUME WILL BE MAINTAINED UNTIL THE DIVERSION TERRACE IS FULLY RECONSTRUCTED.
4. FILTER FENCE WILL BE INSTALLED AT THE UPSLOPE AND DOWNSLOPE SIDES OF THE DIVERSION BERM (AT THE LIMITS OF THE TOPSOIL STRIPPING) TO LIMIT ACCESS AND DISTURBANCE.

National Fuel SUPPLY CORPORATION	DRAWN BY: T. HARRIS (H&A) FILENAME: Plan.dwg LAST REVISION DATE: 04/18/06	DIVERSION TERRACE PROTECTION AND MAT	DRAWING NUMBER: 50

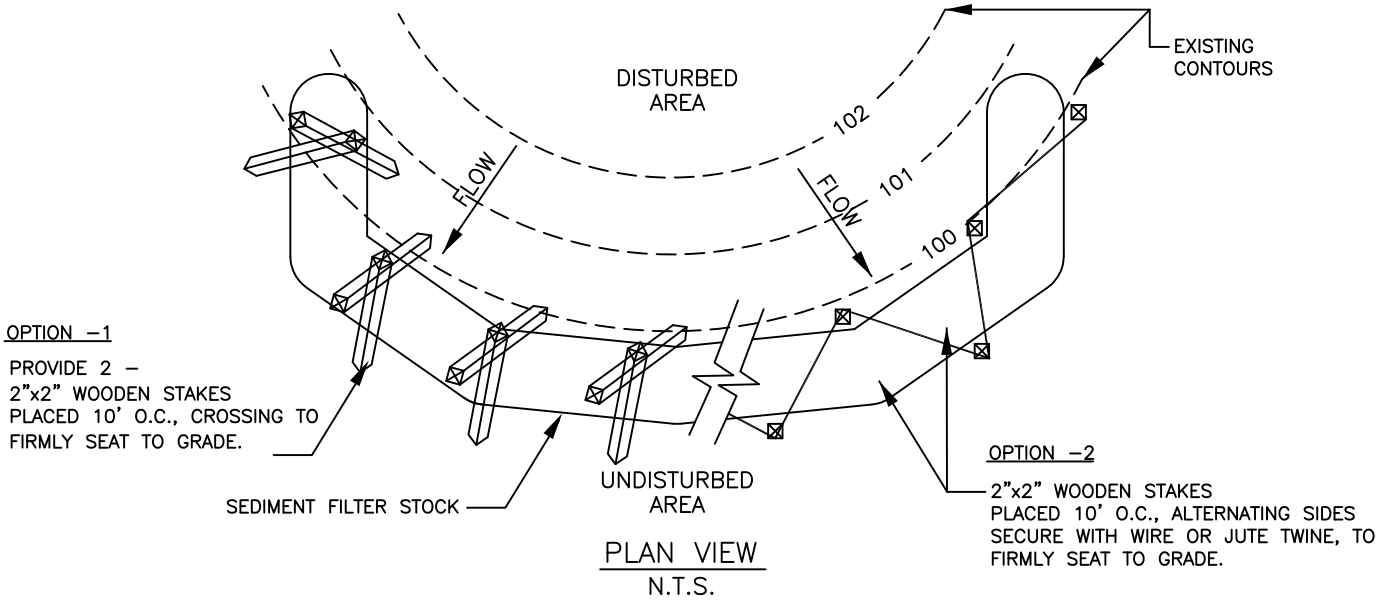

PLAN VIEW
N.T.S.

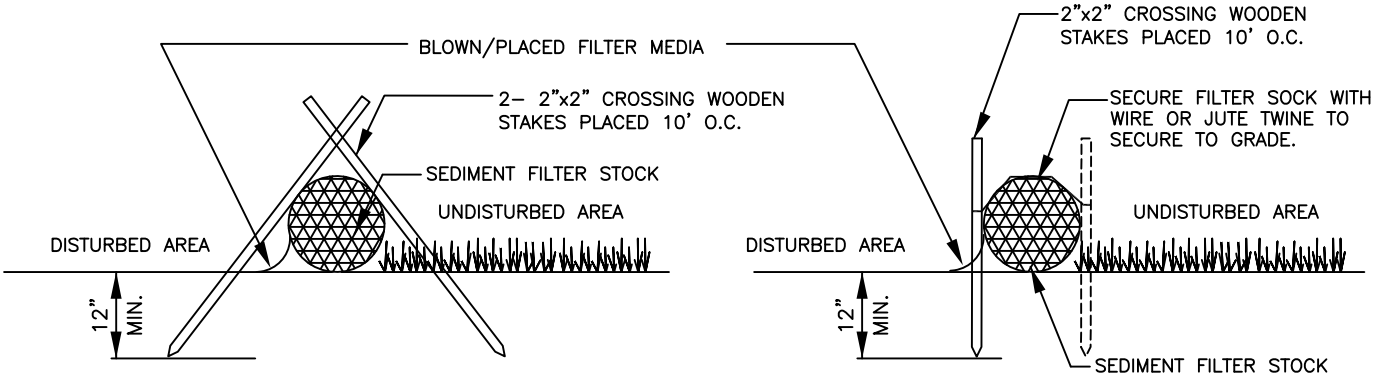

SECTION VIEW–CROSSING STAKE OPTION
N.T.S.

SECTION VIEW–ALTERNATING STAKE OPTION
N.T.S.

Adapted from Filtrexx

SEDIMENT FILTER SOCKS MAY BE FILLED WITH THE FOLLOWING MEDIA:
WOOD FIBER/CHIPS, SHREDDED ASPEN, COCONUT FIBERS, STRAW.

COMPOST FILLED LOGS ARE NOT ACCEPTABLE FOR USE IN NEW YORK STATE

SPREADING OF SEDIMENT SOCK MEDIA ON SITE AFTER UPGRADE STABILIZATION HAS BEEN ACHIEVED SHALL BE ACCEPTABLE ONLY AFTER APPROVAL IS GRANTED BY OWNER. HEAVY SEDIMENT SATURATION IN SOCK OR POOR SPREADING MEDIA MAY REQUIRE THE REMOVAL OF THE ENTIRE SOCK FROM THE PROJECT SITE UPON STABILIZATION.

REFER TO CHECK DAM BMP (17) FOR DESIGN STANDARDS WHEN UTILIZING SOCK FOR THAT PURPOSE.

Traffic shall not be permitted to cross filter socks.

Accumulated Sediment shall be removed when it reaches 1/2 the above ground height of the sock and disposed in the manner described elsewhere in the plan.

Socks shall be inspected weekly and after each runoff event. Damaged socks shall be repaired according to manufacturer's specifications or replaced within 24 hours of inspection.

Biodegradable filter sock shall be replaced after 6 months; photodegradable socks after 1 year. Polypropylene socks shall be placed according to manufacturer's recommendations.

Upon Owner approval and stabilization of the disturbed area to the sock, stakes shall be removed. The sock may be left in place and vegetated or removed. In the latter case, the mesh shall be cut open and the mulch spread as a soil supplement, dispose of mesh.

National Fuel SUPPLY CORPORATION	ENGINEERING DEPT. 1100 STATE STREET P.O. BOX 2081 ERIE, PA. 16512 (814) 871–8676	DRAWN BY: L. A. PHILLIPS FILENAME: DATE: 01/23/2014	SEDIMENT FILTER SOCK (FOR NEW YORK USE)	DRAWING NUMBER: 51

REVIEWED: 01/2014

20160727-4003 FERC PDF (Unofficial) 07/27/2016

Attachment 3

Special Crop Productivity Monitoring Procedures

20160727-4003 FERC PDF (Unofficial) 07/27/2016

SPECIAL CROP
PRODUCTIVITY MONITORING PROCEDURES

February 1993

Provided by:
NYS Dept. of Agriculture & Markets
10-13 Airline Drive
Albany NY 12235-0001

The following outline explains the method the agriculture specialists should use to compare crop yields on and off the right-of-way. It is important that the specialist use sound judgment when selecting areas to sample. These areas should be representative of the field and should have similar soil types, drainage characteristics, and topography.

Evaluating Corn Crops

Plant Population

1.0 Check the plant population in the corn fields in late May or early June.

2.0 Count the number of plants in an area equal to 1/1000 of an acre (see table below). A population count should be done for the spoil area, the trench area, and the traffic area of the right-of-way. Do the same for the unaffected field.

Row Length to Sample 1/1000 Acre

Row Width Inches	Length of Row	
42	12’	5”
40	13’	1”
38	13’	9”
36	14’	6”
34	15’	5”
32	16’	4”
30	17’	5”

3.0 Repeat the population counts for two other locations along the right-of-way in the same field.

4.0 Average the population counts from on the right-of-way and convert to plants per acre. Do the same for counts from off the right-of-way.

General Appearance

1.0 Observe the fields in late July/early August and note any visual differences in population, color, and size on and off the right-of-way.

Yield

1.0 Record differences in general appearance on and off the right-of-way during early September (silage) or early October (grain corn).

2.0 Select sample plots using the same method as in lb, above. Count the number of ears in each sample area. Count the number of rows of kernels and the number of kernels per row on at least three of the ears in the sample area. Kernels at the tip of the ear that are less than 1/2 normal size should not be counted.

3.0 Multiply the number of ears x the number of rows of kernels x the number of kernels per row x 0.01116 = bushels per acre.'

[1]Corn yields are calculated at 15.5% moisture

4.0 Average the results from the three ears from one sample plot. Average the results from the nine sample plots on the right-of-way, do the same for the three sample plots off right-of-way (see example below). Examples of corn yield estimates:

Row width = 30" Length of Row = 17' 5" #of ears in row = 21

	Ear #1	Ear #2	Ear #3
Rows of Kernels	12	10	10
Kernels/Row	40	38	44

21 x 40 x 12 x .0116 = 116.9 bu/ac
21 x 38 x 10 x .0116 = 92.6 buiac
21 x 44 x 10 x .0116 = 107.2 bu/ac

Avg. yield for plot #1 = 105.5 bu/ac

Evaluating Small Grains

1.0 Plant Population

1.1. Check populations in October (winter grains) or mid/late May (spring grains). Population counts should be done for the spoil area, trench area, the traffic area, and the unaffected field. Count the number of plants in 1/10,000 of an acre (2.09' x 2.09'). Repeat the population counts at the other two locations in the same field.

2.0 General Appearance

2.1. Observe the fields in June or early July and record any visual differences in color, size, and plant population on and off the right-of-way.

3.0 Yield

3.1. Harvest the crop for yield checks in mid-July/early August (earlier for winter grains).

3.2. Select sample plots using the same method that was used for the population checks.

3.3. Cut the crop from the sample plot by hand approximately three inches above the ground.

3.4. Separate the grain, weigh, test for moisture level, and average the results from on the right-of-way. Convert the results to bushels per acre and compare (see example below).

Yield estimate for small grains:

Plot size = 1/10,000 of an acre

crop — wheat Avg. weight = 60 lbs./bu

Sample weight = .25 lbs.
Moisture level = 22%
Ideal harvest moisture = 12%
22% - 12% = 8^0/0
.25 lbs. x 8% = .02 lbs,

[1]Corn yields are calculated at 15.5% moisture

.25 lbs. - .02 lbs. = .2.3 lbs
.23 lbs. x 10,000 = 2300 lbs./ac
2300 lbs/ac : 60 lbs/bu = 38.3 bu/ac

Evaluating Soybeans

1) Plant Population
   a) Check the plant populations in late June/early July. if the soybeans are planted in rows use the same method that is used for corn. If the beans are planted with closer spacing use the method for small grains (2.09' x 2.09')

2) General Appearance
   a) Check the general appearance in early August, note any visual differences in population, color, and size on and off the right-of-way.
   b)
3) Yield
   a) Harvest the plants in late September and early October. If the soybeans are planted in rows use the same method that is used for corn. If they are planted with closer spacing use the method for small grains.
   b) Separate the beans, weigh them, and test for moisture. Average the results for the sample areas on the right-of-way using the same method that was used for small grains. Do the same for the areas off the right-of-way.
   c) Convert to bushels per acre.

Evaluating Hay Crops

1) Plant Population
   a) It is not necessary to do population counts for hay crops, however, the agricultural specialist will need to note the percentage of alfalfa in mixed stands on and Off the right-of-way.
   b) Any visible difference in populations of pure alfalfa stands should also be noted.

2) General Appearance
   a) The general appearance of hay stands should be recorded in late spring, mid summer, and late summer. Any differences in color, height, and stand quality should be noted.

3) Yield
   a) Complete yield checks for hay crops just before the second cutting is done.
   b) Cut vegetation from sample plot (1/10,000 of an acre) two to three inches above the ground. Test the moisture level and weigh the sample, adjust the weights using the example below. Average the results from on the right-of-way, do the same for the off right-of-way samples.

   Ideal moisture level = 18% Sample weight = .6 lbs.
   Moisture level of sample = 25%

   25% - 18% = 7%
   .6 lbs. x .07 = .042 lbs.
   .6 lbs. -.042 lbs. = .56 lbs.
   .56 lbs x 10,000 = 5,600 lbs./ac = 2.8 tons/ac.

[1]Corn yields are calculated at 15.5% moisture

20160727-4003 FERC PDF (Unofficial) 07/27/2016

Attachment 4

Seeding, Fertilizing, and Lime Recommendations for Gas Pipeline Right-of-Way Restoration in Farmlands

20160727-4003 FERC PDF (Unofficial) 07/27/2016

NEW YORK STATE FARMLANDS SEEDING, FERTILIZING, AND LIME RECOMMENDATIONS FOR GAS PIPELINE RIGHT-OF-WAY RESTORATION IN FARMLANDS

Rev, 6-15-2005
Provided by
NYS Dept. of Agriculture and Markets
Division of Agricultural Protection and Development Services
10-B Airline Drive
Albany NY 12235-0001

20160727-4003 FERC PDF (Unofficial) 07/27/2016

NEW YORK STATE FARMLANDS

1.0 SEEDING, FERTILIZER, AND LIME RECOMMENDATIONS FOR GAS PIPELINE RIGHT-OF-WAY RESTORATION IN FARMLANDS

This paper supplements the Department of Agriculture and Markets' publication, "Pipeline Right-of-Way Construction Projects: Agricultural Mitigation Through Stages of Project Planning, Construction/ Restoration and Follow.. Up Monitoring (Rev. 1 I-97)." It is intended to familiarize the reader with varieties of seed mixes that are proven highly effective, in New York State farmlands affected by pipeline right-of-way construction, with full agricultural mitigation.

The paper lists several different seed mixes, for permanent cover, and provides other pertinent information including: temporary cover; the need for and use of soil nutrients; as well as follow-up monitoring and other useful notes. This paper is NOT intended as a guide to the sequential steps of disking and surface tillage for seedbed preparation and the sequence of liming, fertilizing, seeding, and mulching.

***** ALL SEEDING RATES BELOW ARE FOR DRILL SEEDER APPLICATION** *[PREFERRED METHOD1.*

***** IF BROADCAST SEEDING IS USED, ALL SEEDING RATES *[BELOW]* MUST BE DOUBLED.**

1.1 Permanent Seeding Mixtures.

1.1.1 Common for hayland planting:

a.) Alfalfa 20# if seeded alone, or with one of the following cold season grasses: Timothy, or Orchard grass, or Bromegrass should be added if one of these grasses is desired by the farm operator, at the rate of 8# per *acre. [See "3) Quick Erosion Control" below.]*

b.) Pardee Birdsfoot Trefoil 16# per acre, plus either:
Timothy, or Orchard grass, or Bromegrass should be added [per farm operator's choice] at 6# per acre rate. *[See "3) Quick Erosion Control" below.]*

c.) Medium Red Clover or Mammoth Red Clover 15# per acre, plus either: Timothy, or Orchard grass, or Bromegrass should be added [per farm operator's choice] at the rate of 6# per acre. *[See "3) Quick Erosion Control" below.]*

1.1.2 Common for pasture planting:

d.) Dutch White Clover 6# per acre; plus Pardee Birdsfoot Trefoil 6# per acre; plus Orchard grass 6# per acre

e.) Note: Reed Canary Grass at the rate of 18# per acre is excellent hay or pasture grass for wetter soils. For hay, cut early. Do not use Reed Canary Grass in wetlands
[See "3) Quick Erosion Control" below.]

1.1.3 *Quick Erosion Control.*

f.) For quick control of erosion when seeding the right-of-way: mix Annual Ryegrass as an additive into each of the Permanent Seeding Mixtures [see above]. Annual Ryegrass provides the quickest temporary cover against erosion [while the other plants are still in their slower/longer period of development]. Use approximately 6# or 7# per acre of the Annual Ryegrass when drill seeding the mix. Double the amount to 12# to 14# of Annual Ryegrass if broadcast.

g.) THE DRILL SEEDING RATES [LISTED ABOVE] FOR DISTURBED PIPELINE RIGHT-OF-WAY ARE SLIGHTLY INCREASED OVER THE STANDARD RATES IN ORDER TO HELP COMPENSATE FOR THE LOWER THAN NORMAL GERMINATION RATES DUE TO:

- THE LOWERING OF NUTRIENTS AVAILABLE TO THE PLANTS AFTER PIPELINE CONSTRUCI ION HAS DISTURBED TOPSOIL AND SUBSOIL.
- TIMING OF SEED MIX APPLICATION MAY BE IDEAL FOR SOME OF THE VARIETIES IN A MIX BUT ONLY MARGINAL FOR ONE OR MORE OTHERS.

h.) Special situation seeding, at project's risk for pastureland only: If the right-of-way's soil is restored by late September, a "risk" seeding can be applied between late September and the third week in October: Aroostook Winter Rye at 2 bu. or 112# per acre, mixed with: Pardee Birdsfoot Trefoil 16# per acre, Tall Fescue 20# per acre and Orchard Grass 8# per acre. The Aroostook Rye provides winter cover, and portions of the high rate of Trefoil, Fescue, and Orchard Grass seed may stay dormant until the following spring season. If successful in coverage, the permanent seeding of respective pastures is complete. If not, the site must be reseeded.

1.2 Temporary Cover.

1.2.1 For large-size pipeline right-of-way projects with a two-year plan, to construct one year and restore the following year.

i.) Topsoil berm

Topsoil stripping and stockpiling performed in late spring to mid summer - broadcast seed the entire topsoil berm with either Oats at 2 bu. [80#] per acre, or Aroostook Winter Rye at 2 bu. [112#] per acre in July-August. A light to moderate rate [about 1500 -2000 #/acre] of weed-free straw mulch cover may be needed for retaining adequate summer soil moisture. *[For larger size topsoil berms, the temporary cover seeding may be more uniformly applied by `flattening the top of the berm and using small, light equipment to drop and broadcast seed from the top, covering all surfaces of the berm.]*

j.) Exposed construction zone/subsoil
After backfilling, by or before late October, plant the exposed right-of-way subsoil to Aroostook Winter Rye at the rate of 3 bu. [168#] per acre with broadcast seeder; or 2 bu. [112#] if drill seeded. In preparation, the surface of the exposed subsoil is first scarified generally parallel with the slope's contours and fertilized with 200# of 10-20-20 (N,P,K) per acre, for temporary winter cover to succeed, due to the subsoil compaction and its low fertility. Apply a light to moderate [not heavy] rate [about 1000 #/acre] of weed-free straw mulch over the temporary seeding,

Note that other temporary cover seedings, in addition to those noted above, may be used, pending on seasonal conditions and the mutual approval of the farmland operator and agricultural inspector.

1.2.2 For any pipeline right-of-way project, large or small where a "winterized" right-of-way is necessary and a seeding with Aroostook Winter Rye can be applied before the end of October:

Topsoil berm and exposed, backfilled construction zone
Apply 3 bu. [168#] per acre, broadcast, Refer to Exposed construction zone above regarding scarification of surface and rate of straw mulch.

1.2.3 For unavoidable, off-season construction ['mud and freeze-thaw" season construction], when topsoil is stripped after October, and effective, temporary cover seeding is impossible due to inherent climate factors: use a moderate rate of weed-free straw mulch cover over the topsoil berm. Establish and maintain all temporary erosion controls along the construction right-of-way corridor - throughout the off season construction - including but not limited to: outside perimeter runoff ditching; silt fencing; water bars and runoff drainage gaps through the topsoil berm and across right-of-way to prevent water ponding, berm saturation, and erosion.

1.3 Use Seed Inacculant.

1.3.1 Remember to apply the appropriate variety of fresh inocculant to all legume seed before use [e.g.: alfalfa, birdsfoot trefoil, etc.]. *Even if the seed label says it is pre-inocculated, the viable seed in the batch could easily be two or more years old while the pre-inocculant is past its life.* The certified seed itself may still be good, but non-responsive without the proper fresh inocculant applied at the time of seeding.

1.4 Fertilizer For Right-of-Way Reseeding:

Soil Testing, The fertilizer rates listed below are approximations. Prior to construction, before the topsoil is stripped, representative sampling is conducted: agronomic soil samples are obtained about 400 feet apart along the right-of-way, and submitted and laboratory tested for: pH; % organic material; cation exchange capacity, and N,P,K [Nitrogen, Phosphorus/Phosphate, and Potassium/Potash). The results are applied to determine the lime and fertilizer rate to apply for the respective soils and farms.

1.4.1 "10-20-20" This means 10# of nitrogen, 20# of phosphorus, 20# of potash per 100# of fertilizer. Pending on test results, use 300# per acre, [This totals out to 30# of nitrogen, 60# of

20160727-4003 FERC PDF (Unofficial) 07/27/2016

phosphorous, 60# of potash per acre.]

1.4.2 "5-10-10" This means 5# of nitrogen, 10# of phosphorus, 10# of potash per 100# of fertilizer. Pending on test results, use 600# per acre. [This totals out to 30# of nitrogen, 60# of phosphorous, 60# of potash per acre.]

1.5 Fertilizer for temporary cover seeding of exposed right-of-way construction work surface.

Refer to "Temporary Cover" B. 1. b. exposed construction zone/subsoil on page 2.
(Fertilizer is not recommended for temporary seed cover on the topsoil berm, but is strongly advised on the exposed subsoil surface.)

1.6 Fertilizer as a topdressing [follow-up additive] in haylands and pastures:

"16-8-8" This means 16# of nitrogen, 8# of phosphorous, 8# of potash per 100# of fertilizer. Use 200-300# per acre, depending on field conditions. This totals out to either:
32# of nitrogen, 16# of phosphorus, 16# of potash; or
48# of nitrogen, 24# of phosphorus, 24# of potash per acre,

1.7 Agricultural Lime.

See reference to Soil testing, for pH, in **D. Fertilizing For Right-of-Way Reseeding,** above.

- A minimum rate of 3 tons agricultural lime per acre for most permanent seedings in naturally low-lime soils [e,g.: Southern Tier/northern Allegheny Plateau]. A heavier amount will be applied if so indicated from pH test results. Use lower lime rate on naturally high-lime soils based on site specific soil pH test and farm record of recent lime application [e.g.: Central Plains/northern half of Finger Lakes Region].

- Pelletized and agriculture lime are rated the same in tons to be applied. Except pelletized is easier to handle and reacts to the soil quicker but it cannot be reduced in its amount. [Do not use "liquid lime" on agricultural land.]

1.8 Monitoring and Follow-Up.
Restored right-of-way is monitored for not less than two years after initial restoration seeding is completed. The seeding is satisfactory if it produces equal to or better than the adjacent undisturbed planting. Seasonal surface soil moisture conditions will vary from year to year, and may be ideal to poor [excessively dry] for germination when pipeline project applies the seed. Seedings that are unsatisfactory due to lower plant population/poor plant health or overpopulation of weeds will be replanted.

Far monitoring of crop productivity, refer to: "Special Crop Productivity Monitoring Procedures," a February 1993 paper, provided by the NYS Department of Agriculture and Markets.

20160727-4003 FERC PDF (Unofficial) 07/27/2016

1.9 Final Notes on Seedings.

- Always use certified seed for each variety used alone or in a mix.
-
- Always use a Brilion drill seeder with rear cultipacker, or similar implement, for hayland and improved pasture seedings.
- Do not try to seed when the ground is wet.
- While Empire birdsfoot trefoil has been a traditional variety applied throughout the region, the more recently developed "Pardee" birdsfoot trefoil is widely applied with proven performance in soils with drainage limitations and even better in well-drained soils. The Pardee variety has improved winter survival over other varieties when properly planted.
- Remember to double the permanent seeding rates when using broadcast seeding due to the mortality rate,
- Perennial Ryegrass is not a favorite grass with farmers and is not recommended in seed mixes on agricultural right-of-way.
- Incorporate fertilizer and lime into the soil; and apply fine surface tillage/seedbed preparation practices
- Creeping Fescue is shade tolerant.

- *New York State Department of Agriculture and Markets*
  Division of Agricultural Protection and Development Services

20160727-4003 FERC PDF (Unofficial) 07/27/2016

Attachment 5

NFG General Seed Mixtures

Temporary Mixtures - October 15 through March 31

Site preparation: Apply 1 ton of agricultural-grade limestone per acre, plus fertilizer at the rate of 10-10-10 per acre, and work in where possible. After seeding, mulch with hay or straw at a rate of 3 tons per acre.

Lime	Fertilizer	Mulch
One (1) ton per acre	150 lbs. per acre 10-10-10	Hay or Straw 3 tons per acre

Temporary Seed Mixture
Winter Rye
170lbs. per acre

Permanent Mixtures - April 1 through October 14

For non-agricultural lands use the following guidelines:

Lime	Fertilizer	Mulch
Six (6) ton per acre	1,000 lbs. per acre 10-10-20	Hay or Straw 3 tons per acre

☐ **NFG Seed Mixture No. 1**
General R.O.W. Mixture
Application Rate 40 lbs. per acre
30% Fawn Tall Fescue
25% Annual Ryegrass
15% Timothy
10% Birdsfoot Trefoil
10% Alsike Clover
5% Yellow Blossom Clover
5% Red Top

☐ **NFG Seed Mixture No. 3**
Wet Upland Areas
Application Rate 50 lbs. per acre
70% Perennial Ryegrass
24% Birdsfoot Trefoil
6% Red Top

☐ **NFG Seed Mixture No. 4**
Residential Lawns
Application Rate 120 lbs. per acre
ERNST # ERNMX-114
"Penn State Mix"
50% Kentucky Bluegrass
30% Creeping Red Fescue
10% Perennial Ryegrass
10% Annual Ryegrass

☐ **NFG Seed Mixture No. 5**
Agricultural Lands
Application Rate 30 lbs. per acre
50% Alfalfa
50% Timothy

☐ **NFG Seed Mixture No. 6**
Wetlands
Application Rate 40 lbs. per acre
100% Annual Ryegrass

☐ **NFG Seed Mixture No. 9**
Steep Slopes >20%
Application Rate 50 lbs. per acre
40% Perennial Ryegrass
40% Lathco Flatpea (2 x inoculm)
20% Birdsfoot Trefoil

☐ **Ernst Seed Mixture**
Cattle Grazing Mix
Application rate 30 lbs. per acre
ERNST # ERNMX-118
30% Festuloliom
30% Orchardgrass
30% Perennial Ryegrass
5% Red Clover
5% White Clover

☐ **Ernst Seed Mixture**
Cattle Hay mix
Application Rate 20 lbs. per acre
ERNST # ERNMX-108
40% Red Clover
30% Tall Fescue
20% Alfalfa
10% Timothy

☐ **Ernst Seed Mixture**
Horse Pasture and Hay Mix
Application rate 25 lbs. per acre
ERNST # ERNMX-107
40% Orchardgrass
28% perennial Ryegrass
20% Tall Fescue
5% Timothy
5% Kentucky Bluegrass
2% Meadow Brome

☐ **Strip Mine Seed Mixture**
Application Rate 43 lbs. per acre
20 lbs. Annual Ryegrass
8 lbs. Switchgrass
6 lbs. Alsike Clover
5 lbs. Creeping Red Fescue
4 lbs. Red Top

20160727-4003 FERC PDF (Unofficial) 07/27/2016

Attachment 6

Winter Construction Plan

WINTER CONSTRUCTION PLAN

January 2015

NOTE: All elements of this Plan are subject to applicable permit requirements and conditions, as well as general or specific applicable regulatory requirements imposed by Federal, State or Local agencies (Regulatory Authorities). Any contradictions between regulations or activities imposed by Regulatory Authorities and those outlined in this Plan, shall default to the measures prescribed by the Regulatory Authorities.

It will be required by The Contractor to correct any trenchline subsidence that occurs during spring thaw prior to final restoration.

PRECONSTRUCTION PLANNING

The Company has developed and suggests the implementation of this winter construction plan when any of the following conditions could occur:

- Sustained cold temperatures occur that result in the freezing to a depth of 2 inches or more;
- Backfill material could freeze to the extent that adequate compaction becomes difficult;
- Topsoil stockpiles could freeze and cannot be uniformly redistributed across disturbed areas or separated from the sub-grade material;
- Snow accumulations are great enough to prevent visual observation of the construction work area; or
- Historical conditions in the region indicate that significant runoff from spring snow melt may require additional protective measures.

This plan addresses and identifies the chain of decision making that will occur on a day-to-day basis for determining the construction practices that can occur in any one area.

SAFETY RECOMMENDATION

Tips to Protect Workers

Workers who have prolonged exposure to freezing or cold temperatures may cause serious health problems such as trench foot, frostbite, and hypothermia. I extreme cases, including cold water immersion, exposure can lead to death. Danger signs include uncontrolled shivering, slurred speech, clumsy movements, fatigue, and confused behavior. If these signs are observed, call for emergency help.

OSHA's Cold Stress Card (attached) provides a reference guide and recommendations to combat and prevent many illnesses and injuries. Other tips include the following:

Recommendations for Employers

Employers should take the following steps to protect workers from cold stress:

- Schedule construction, repair, and maintenance projects in cold areas for warmer months, if possible.
- Schedule cold projects for the warmer part of the day, if possible.
- Reduce the physical demands of workers.
- Use relief workers or assign extra workers for long, demanding tasks.
- Provide warm liquids to workers.
- Provide warm areas for use during break periods.
- Monitor workers who are a risk of cold stress.
- Provide cold stress training that includes information about:
    - Worker risk
    - Prevention
    - Symptoms
    - The importance of monitoring yourself and coworkers for symptoms
    - Treatment Personal protective equipment

Recommendations for Workers

Workers should avoid exposure to extremely cold temperatures when possible. When cold environments or temperatures cannot be avoided, workers should follow these recommendations to protect themselves from cold stress.

- Wear appropriate clothing.
    - Wear several layers of loose clothing. Layering provides better insulation.
    - Tight clothing reduces blood circulation. Warm blood needs to be circulated to the extremities.
    - When choosing clothing, be aware that some clothing may restrict movement resulting in a hazardous situation.
- Make sure to protect the ears, face, hands, and feet in extremely cold weather.
    - Boots should be waterproof and insulated.
    - Wear a warm hat; it will keep your whole body warmer. (Hats reduce the amount of body heat that escapes from your head.)
- Move into warm locations during work breaks; limit the amount of time outside on extremely cold days.
- Carry cold weather gear, such as extra socks, gloves, hats, jackets, a change of clothes, and a thermos of hot liquid.
- Include a thermometer and chemical hot packs in your first aid kit.
- Avoid touching cold metal surfaces with bare skins.

Monitor your physical condition and that of your coworkers.

SNOW USES, REMOVAL, AND STORAGE

Uses

Snow can be used for insulation over the trench line prior to excavation to reduce frost penetration along the line until ditching process begins.

Removal

Snow should be removed from the construction workspace to provide safe and efficient working conditions and to expose soils for grading/excavation when snow impedes safe working conditions. Removal of snow along the access roads is necessary to ensure safe access to the right-of-way. Snow should be removed from all storage locations to allow the subsurface to freeze.

Storage

Snow storage within the right of way should clearly separate snow from spoil storage to avoid mixing.

Snow removal and storage shall be placed in an area to avoid any potential erosion problems due to sudden melting.

Landowner Requirements

Prior to construction, if winter construction is anticipated, The Company will identify appropriate snow removal and storage areas, and secure approval from affected landowners, addressing landowner access, fences and gates.

Acceptable Snow Removal and Storage Methods

Snow removal on the right-of-way and access roads should be accomplished by minimizing spoil being removed along with the snow. The snow should be stockpiled in designated areas, as allowed by landowner agreements and permit conditions.

The placement and protection of the stockpiles should ensure that snow melt will not cause erosion and sedimentation issues.

Sensitive Areas

No stockpiled snow shall be placed in designated avoidance areas, such as cultural resource sites, residential mitigation areas, sensitive species or habitat areas, or within wetlands/waterbodies including buffer areas. The Company will identify these areas and provide signage and/or safety fence as applicable, to ensure compliance with this condition.

CROSSING WETLANDS AND WATERBODIES

Topsoil Segregation

Prior to trench excavation, snow can be piled over the trench line to form an insulating barrier and prevent deep frost penetration. The stockpiled snow is then removed just prior excavation to prevent mixing of the snow and the topsoil material. Where the excavated materials are exposed to freezing ambient air temperatures for extended periods of time the backfill will tend to be larger, angular blocks. The blocks should be broken into smaller pieces to reduce trench subsidence during spring thaw.

The Contractor should not use frozen backfill. To avoid frozen backfill, strip off the outer frozen layer of the spoil pile to expose the inner unfrozen subsoil. The frozen soil should then be broken up into smaller pieces to avoid voids which cause subsidence. In winter conditions a slight crown should be created over the trench line, this will allow for backfill subsidence. During final grading and clean-up, restore the trench line back to surrounding contours.

To minimize high water content wetland spoil freezing to ground surface, minimize the amount of open trench during frozen conditions. Fill should not be placed on saturated or frozen surfaces. To avoid this The Contractor should place timber mats and/or geotextile matting on the ground prior to excavation and fill placed on top.

Pipeline excavation activities should limit the length of open ditch to allow for excavation, lowering in, and backfilling to a range of 24 to 72 hours. Frozen or soft, mucky, or highly compressible materials should not be incorporated into fills. Frozen material should be set aside and placed on top of the backfilled trench or the trench backfilled with a crown. The crown should only be constructed directly over the backfilled trench with native material and should not extend out beyond the trench line.

Subsoil that is used to crown the trench line should not extend above the natural surface grade. The crown will be capped with native topsoil to ensure elevations will be restored with topsoil at the surface. If the topsoil has been removed as a frozen material, the topsoil should be placed on top of the trench line as the cap of the crown. Small gaps can be left in the crown to allow for natural surface drainage before the material is completely settled during thaw conditions.

<u>All backfilled material should be monitored for subsidence and excessive crowning conditions</u>.

Final restoration of wetlands should be completed to the maximum extent practicable during winter conditions. Complete remediation may be required during non-frozen conditions as necessary.

Temporary Bridges

During construction temporary bridges will be installed across wetlands and waterbodies. If construction activities cease during winter periods, all bridges will be removed that will be impacted by high flow during spring runoff.

UPLAND AREAS

Unless the landowner or land management agency specifically approves otherwise, prevent the mixing of topsoil with subsoil by stripping topsoil from either the full work area or from the trench and subsoil storage area (ditch plus spoil side method) in:

- Cultivated or rotated croplands, and managed pastures;
- Residential areas;
- Hayfields; and
- Other areas that are defined by the restriction list.

The average duration and intensity of winter conditions in the project region should be considered early in project planning and scheduling. Regions that have extended periods of freezing temperatures and deeper frost depths will require more deliberate planning for topsoil segregation. Long-term topsoil stockpiling to manage the topsoil may be required to ensure a more effective seeding and restoration after the spring thaw.

Residential Area Construction

In residential areas, importation of topsoil is an acceptable alternative to topsoil segregation.

Where topsoil segregation is required, the Company will:

- Segregate at least 12 inches of topsoil in deep soils (more than 12 inches of topsoil); and
- Make every effort to segregate the entire topsoil layer in soils with less than 12 inches of topsoil.

Maintain separation of snow, salvaged topsoil, and subsoil throughout all construction activities.

Segregated topsoil may not be used for padding the pipe, constructing temporary slope breakers or trench plugs, improving or maintaining roads, or as a fill material.

Stabilize topsoil piles and minimize loss due to wind and erosion with use of sediment barriers, mulch, temporary seeding, tackifiers, or functional equivalents, where necessary. Topsoil segregation should be accomplished, where practicable, prior to frozen conditions. Specialized equipment may be used to break up the topsoil prior to stripping.

Restoration of the topsoil should ideally occur after both the topsoil and the exposed subsoil have thawed, the ground has dried after the spring melt, and the soils are more easily worked. If an extended wet period occurs after the spring thaw, proper erosion and sediment controls should be set into place to avoid topsoil loss and discharges into wetlands or waterbodies. Right-of-way stabilization needs to be implemented regardless of whether topsoil restoration has taken place. Temporary stabilization of the right-of-way and topsoil pile can take place by re-mulching and dormant seeding if necessary.

For all properties with residences located within 50 feet of construction work areas, The Company will; avoid removal of mature trees and landscaping within the construction work area unless necessary for safe operation of construction equipment, or as specified on landowner agreements; fence the edge of the

construction work area for a distance of 100 feet on either side of the residence; and restore all lawn areas and landscaping, if possible, immediately following clean up operations, or as specified in landowner agreements. If frozen conditions prevent compliance with these time frames, maintain and monitor temporary erosion controls (sediment barriers and mulch) until conditions allow completion of restoration.

Throughout construction, traffic lanes and access to homes will be maintained except for the brief periods essential for laying the new pipeline. The Contractor will erect temporary safety fences in the vicinity of streets and homes to keep the public away from the construction zone. The Company may use techniques such as stovepipe and drag section construction in order to minimize the impacts of construction in residential areas on a site-specific basis. Site-specific residential mitigation plans will be utilized in areas with residences within 25 feet from the edge of construction right-of-way.

Homeowners will be notified in advance of any scheduled disruption of household utilities and the duration of the interruption will be kept as brief as possible. Representatives of the local utility companies will be on-site during construction when necessary. In addition, The Company and Contractor will strive to accommodate any special concerns regarding ornamental shrubs, trees, or structures by avoiding them as long as such avoidance will not unduly interfere with construction and operation of the pipeline.

The Company and Contractor will take measures to ensure that construction activities will not prevent access to residential areas by fire and emergency vehicles. At least one lane of traffic will be kept open for emergency vehicles when constructing on or across residential streets. During the brief period of road closure, steel plates will be available on site to cover the open area to permit travel by emergency vehicles.

WATER HANDLING

The Contractor will maintain, at all times during winter construction, sufficient means to promptly remove and dispose of water entering the trench or other parts of the right-of-way or construction area.

Fill should not be placed on saturated or frozen surfaces. Any and all ice should be removed from the open trench prior to backfill. If not removed significant subsidence following spring melt can occur.

Dewatering activities performed during frozen conditions will be continuously monitored and adjusted as necessary. Discharge locations should be carefully evaluated and selected based on the site conditions including vegetation cover, soil type, and topography. When dewatering pumps are not in use, pumps and hoses should be properly drained to prevent damage.

Structure Installation / Removal

Planning for dewatering structure locations that include filter bags and straw bale structures should be completed early in the construction process and if possible(before freezing) when ground conditions are favorable.

Removal of dewatering structures should take place promptly after final use. If conditions do not allow for a prompt removal, clearly mark structures until proper removal can take place.

Hydrostatic Testing

In areas where test water discharges are occurring on top of frozen ground, the discharge water will not absorb into the ground, resulting in increased surface water runoff and ponding in low lying areas. The increased runoff can melt and erode the upper layer of frozen soil, especially in areas where the water may become channelized. Discharge water can also flow underneath snow, causing unobserved erosion and potentially deposition in sensitive resource areas.

Similar to dewatering activities during standard non-frozen construction conditions, dewatering activities performed during frozen conditions should be continuously monitored and adjusted as necessary. Discharge locations should be carefully evaluated and selected based on site conditions including vegetation cover, soil type, and topography. Dewatering activities will only take place during daylight hours.

Where testing will occur during low-flow periods, The Company will discuss any appropriation volume or rate restrictions with the appropriate regulatory agencies.

TEMPORARY EROSION AND SEDIMENT CONTROL

Temporary erosion and sediment control measures installed prior to or during frozen conditions may not remain functional under these conditions. The Company and Contractor will review the construction right-of-way in advance of frozen ground conditions and install the necessary temporary erosion and sediment control devices in advance of changing weather.

Advance placement will allow for the “keying” in of bales to the ground that will enable the devices to be more effective throughout construction. Sediment barriers (silt fence, straw bales, earthen berms, filter sock) will be installed across the right-of-way at waterbodies, wetlands, and road crossings as determined necessary by the Environmental Inspector.

The Company and/or Contractor will keep an Environmental Inspector (EI) and environmental labor crew on site or on call through the periods of thaw to monitor erosion control structures and stabilization efforts and make adjustments or repairs as necessary and as right-of-way conditions allow. Crews should have proper equipment available to allow access to the right-of-way under soft soil conditions.

If final cleanup and restoration activities have not occurred prior to the spring melt, monitoring of the right-of-way should be implemented during the delay between construction and restoration or temporary shutdown of construction activities. The monitoring program should include:

- Erosion control structures requiring repair;
- Areas of slope instability; and
- Areas where significant levels of erosion are occurring.

The Environmental Inspector should determine the most effective means of dealing with identified problems, taking into consideration the suitability of the right-of-way for access by equipment, potential

damages that could occur by equipment accessing the right-of-way, and the urgency / significance of the problem.

WINTER STABILIZATION PLANNING

When construction is complete or has been postponed, and final restoration (i.e. decompaction, final grading, topsoil replacement, and lime/fertilization/seeding) is delayed until the spring or summer, the development of a site specific winter stabilization plan should be implemented. The purpose of this plan is to avoid excess site disturbance resulting from freeze/thaw periods and precipitation events in the winter months and into the spring.

The plan should be drafted using any applicable information including, but not limited to: guidelines provided by appropriate agencies, specifications found within the ESCAMP, and guidance from the Company or third-party environmental inspector personnel. The plan should identify key areas of concern, additional erosion control measures to be implemented, timeframes for site inspections over winter shutdown, timeframes for restoration activities, and any site-specific factors that may affect proper restoration of the project area (i.e. landowner restrictions).

General Guidelines

As construction approaches winter months, weather conditions must be closely monitored and The Contractor must take measures to stabilize areas that will not be restored before winter freeze. These areas should be properly stabilized ahead of time, during favorable weather conditions when soils are more easily worked, if possible. In the absence of written recommendations from the local soil conservation authorities, mulch/seed all disturbed soils within 4 working days of final grading in Pennsylvania and 7 days in New York, weather and soil conditions permitting.

When construction timeframes and/or seasonality do not allow for, or are not likely to allow for, proper restoration of the ROW after backfilling, all non-active areas should be stabilized once facilities are installed.

When construction in an area ceases, open excavations will be backfilled as necessary, or safety fencing will be installed for protection. Because restoration will be delayed, any compacted subsoil must be roughened to reduce the potential for erosion during snowmelt or significant rain events.

Slope breakers, berms, and other erosion and sediment control measures will be installed to minimize erosion along the ROW and deposition of sediments off the ROW. If not already completed, gaps will be cut into topsoil and subsoil piles and through the crown over the trench to allow drainage across the ROW. Environmental Inspectors may determine the need for additional erosion and sediment controls, where necessary.

Equipment bridges will be removed from water courses where potential for high spring flows could compromise the integrity of bridges. Stream banks and adjacent areas on either side of stream or wetland

crossings will be stabilized, where needed. Wetland areas where mats are removed will be cleaned up to the extent possible and disturbed soils adjacent to streams and wetlands will be stabilized, if necessary.

All disturbed areas will require temporary mulch before a winter shutdown. Temporary mulch will be applied at a rate of 3 tons per acre to all disturbed areas. The temporary mulch will be crimped in where possible, or will be track-walked into the right-of-way where ground conditions or slopes make the use of the crimping tool impractical. One hundred percent (100%) mulch will be spread on non-stabilized slopes of 10% or steeper. Only weed-free straw mulch, not hay mulch, will be used where mulch is needed on agricultural land. If significant snow cover or frozen conditions exist on the right-of-way, the decision to apply mulch to disturbed areas will be determined by the Environmental Inspector. If the situation permits, consultation with local erosion control professionals and applicable agencies may be necessary to determine the best methods for anchoring the mulch (i.e. soil tackifiers).

All temporary erosion and sediment controls and stabilization measures should be inspected prior to winter shutdown and periodically throughout the shutdown period to ensure they are functioning properly. If deficient erosion and sediment control measures are discovered during winter shutdown, The Contractor must mobilize personnel to the site to remedy the problem upon notification.

Seeding

For instances where weather conditions allow proper decompaction of soils, final grading, and topsoil replacement, the following temporary mixtures may be used to stabilize the right-of way between the dates **October 15th** and **March 31st**

Lime	**Fertilizer**	**Mulch**
One (1) ton per acre	150 lbs. per acre 20-20-20	Hay or Straw 3 tons per acre

Temporary Seed Mixture

Winter Rye

170 lbs. per acre

If winter rye is unavailable, an alternative such as winter oats or winter wheat may be substituted. For other seed mixes, to ensure adequate vegetation growth when seeding outside of the recommended seeding windows, seed at a higher rate to account for lower germination success. Before permanent seeding is planted in spring, the right-of-way will be inspected and any grade or water control structures that have been damaged over the winter will be repaired.

THE COLD STRESS EQUATION

LOW TEMPERATURE + WIND SPEED + WETNESS = INJURIES & ILLNESS

When the body is unable to warm itself, serious cold-related illnesses and injuries may occur, and permanent tissue damage and death may result. **Hypothermia** can occur when *land temperatures* are **above** freezing or *water temperatures* are below 98.6°F/37°C. Cold-related illnesses can slowly overcome a person who has been chilled by low temperatures, brisk winds, or wet clothing.

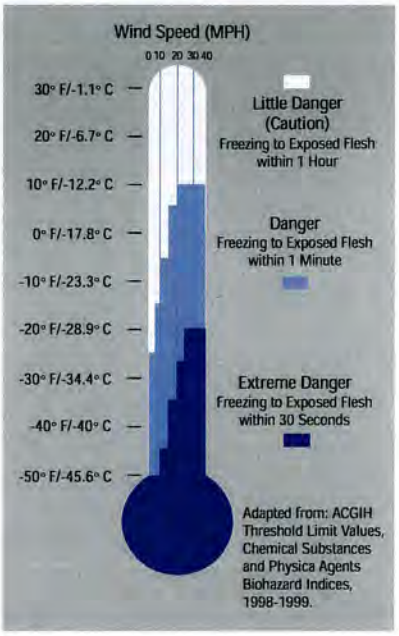

U.S. Department of Labor
Occupational Safety and Health Administration
OSHA 3156
1998

How to Protect Workers

- Recognize the environmental and workplace conditions that lead to potential cold-induced illnesses and injuries.
- Learn the signs and symptoms of cold-induced illnesses/injuries and what to do to help the worker.
- Train the workforce about cold-induced illnesses and injuries.
- Select proper clothing for cold, wet, and windy conditions. Layer clothing to adjust to changing environmental temperatures. Wear a hat and gloves, in addition to underwear that will keep water away from the skin (polypropylene).
- Take frequent short breaks in warm dry shelters to allow the body to warm up.
- Perform work during the warmest part of the day.
- Avoid exhaustion or fatigue because energy is needed to keep muscles warm.
- Use the buddy system (work in pairs).
- Drink warm, sweet beverages (sugar water, sports-type drinks). Avoid drinks with caffeine (coffee, tea, or hot chocolate) or alcohol.
- Eat warm, high-calorie foods like hot pasta dishes.

Workers Are at Increased Risk When...

- They have predisposing health conditions such as cardiovascular disease, diabetes, and hypertension.
- They take certain medication (check with your doctor, nurse, or pharmacy and ask if any medicines you are taking affect you while working in cold environments).
- They are in poor physical condition, have a poor diet, or are older.

HYPOTHERMIA - (Medical Emergency)

What Happens to the Body:

NORMAL BODY TEMPERATURE (98.6° F/37°C) DROPS TO OR BELOW 95°F (35°C); FATIGUE OR DROWSINESS; UNCONTROLLED SHIVERING; COOL BLUISH SKIN; SLURRED SPEECH; CLUMSY MOVEMENTS; IRRITABLE, IRRATIONAL OR CONFUSED BEHAVIOR.

What Should Be Done: (land temperatures)

- Call for emergency help (i.e., Ambulance or Call 911).
- Move the person to a warm, dry area. Don't leave the person alone. Remove any wet clothing and replace with warm, dry clothing or wrap the person in blankets.
- Have the person drink warm, sweet drinks (sugar water or sports-type drinks) if they are alert. **Avoid drinks with caffeine** (coffee, tea, or hot chocolate) or alcohol.
- Have the person move their arms and legs to create muscle heat. If they are unable to do this, place warm bottles or hot packs in the arm pits, groin, neck, and head areas. **DO NOT** rub the person's body or place them in warm water bath. This may stop their heart.

What Should Be Done: (water temperatures)

- Call for emergency help (Ambulance or Call 911). Body heat is lost up to 25 times faster in water.
- **DO NOT** remove any clothing. Button, buckle, zip, and tighten any collars, cuffs, shoes, and hoods because the layer of trapped water closest to the body provides a layer of insulation that slows the loss of heat. Keep the head out of the water and put on a hat or hood.
- Get out of the water as quickly as possible or climb on anything floating. **DO NOT** attempt to swim unless a floating object or another person can be reached because swimming or other physical activity uses the body's heat and reduces survival time by about 50 percent.
- If getting out of the water is not possible, wait quietly and conserve body heat by folding arms across the chest, keeping thighs together, bending knees, and crossing ankles. If another person is in the water, huddle together with chests held closely.

FROST BITE

What Happens to the Body:

FREEZING IN DEEP LAYERS OF SKIN AND TISSUE; PALE, WAXY-WHITE SKIN COLOR; SKIN BECOMES HARD and NUMB; USUALLY AFFECTS THE FINGERS, HANDS, TOES, FEET, EARS, and NOSE.

What Should Be Done: (land temperatures)

- Move the person to a warm dry area. Don't leave the person alone.
- Remove any wet or tight clothing that may cut off blood flow to the affected area.
- **DO NOT** rub the affected area, because rubbing causes damage to the skin and tissue.
- **Gently** place the affected area in a warm (105°F) water bath and monitor the water temperature to **slowly** warm the tissue. Don't pour warm water directly on the affected area because it will warm the tissue too fast causing tissue damage. Warming takes about 25-40 minutes.
- After the affected area has been warmed, it may become puffy and blister. The affected area may have a burning feeling or numbness. When normal feeling, movement, and skin color have returned, the affected area should be dried and wrapped to keep it warm. **NOTE:** If there is a chance the affected area may get cold again, do not warm the skin. If the skin is warmed and then becomes cold again, it will cause severe tissue damage.
- Seek medical attention as soon as possible.

20160727-4003 FERC PDF (Unofficial) 07/27/2016

APPENDIX E

WATERBODY AND WETLAND CROSSING TABLES

TABLE E-1

Waterbodies Within Workspace or Crossed by the Northern Access 2016 Project

Facility/ State	Mile-post	Stream ID	Stream Name	Flow Regime	Water Depth (feet)	Pipeline Crosses Stream? (as opposed to Stream in Workspace Only)	Crossing Width[b] (feet)	Length of Stream in ROW[c] (feet)	New York Water Standard[d]	PA Chapter 93 Classification[e]	PAFBC Stream Designation[f]	FERC Classification	Proposed Crossing Method[g, h]
MAINLINE PIPELINE ROW													
Pennsylvania													
McKean													
	1.53	S163a	UNT to Bloomster Hollow	Ephemeral	3	-	4	24	n/a	Drains to CWF	Drains to ATW, TNR, STS	Minor	Temporary Bridge
	1.53	S164a	UNT to Bloomster Hollow	Ephemeral	0	-	2	24	n/a	Drains to CWF	Drains to ATW, TNR, STS	Minor	Temporary Bridge
	1.64	S005	Bloomster Hollow	Intermittent	0.55	Y	5	162	n/a	CWF	TNR, Drains to ATW, STS	Minor	Dry Crossing
	5	S007b	UNT to Irons Hollow	Intermittent	0.1	Y	14	150	n/a	Drains to CWF	Drains to ATW, TNR, STS	Intermediate	Dry Crossing
	5	S008	UNT to Irons Hollow	Intermittent	0.1	-	4	7	n/a	Drains to CWF	Drains to ATW, TNR, STS	Minor	Dry Crossing
	5.05	S011	UNT to Irons Hollow	Perennial	0.17	Y	4	217	n/a	Drains to CWF	Drains to ATW, TNR, STS	Minor	Dry Crossing
	5.08	S012	UNT to Irons Hollow	Perennial	0.25	Y	12	133	n/a	CWF	Drains to ATW, TNR, STS	Intermediate	Dry Crossing
	5.12	S013	UNT to Irons Hollow	Ephemeral	0.1	Y	2	104	n/a	Drains to CWF	Drains to ATW, TNR, STS	Minor	Dry Crossing
	5.12	S014	UNT to Irons Hollow	Ephemeral	0	Y	2	56	n/a	Drains to CWF	Drains to ATW, TNR, STS	Minor	Dry Crossing
	5.48	S015	UNT to Irons Hollow	Perennial	0.5	Y	5	99	n/a	CWF	Drains to ATW, TNR, STS	Minor	Dry Crossing
	5.78	S165a	UNT to Irons Hollow	Intermittent	0	Y	10	89	n/a	CWF	Drains to ATW, TNR, STS	Minor	Dry Crossing
	5.84	S167a	UNT to Irons Hollow	Ephemeral	0	Y	1	273	n/a	Drains to CWF	Drains to ATW, TNR, STS	Minor	Dry Crossing

TABLE E-1

Waterbodies Within Workspace or Crossed by the Northern Access 2016 Project

Facility/ State	Mile-post	Stream ID	Stream Name	Flow Regime	Water Depth (feet)	Pipeline Crosses Stream? (as opposed to Stream in Workspace Only)	Crossing Width[b] (feet)	Length of Stream in ROW[c] (feet)	New York Water Standard[d]	PA Chapter 93 Classification[e]	PAFBC Stream Designation[f]	FERC Classification	Proposed Crossing Method[g, h]
	5.95	S168a	UNT to Irons Hollow	Intermittent	0.17	-	2	31	n/a	Drains to CWF	Drains to ATW, TNR, STS	Minor	Dry Crossing
	6.45	S170a	UNT to Marvin Creek	Intermittent	0.08	Y	2	205	n/a	Drains to CWF	no classification	Minor	Dry Crossing
	6.45	S172a	UNT to Marvin Creek	Ephemeral	0	Y	1	195	n/a	Drains to CWF	no classification	Minor	Dry Crossing
	6.5	S173a	UNT to Marvin Creek	Intermittent	0	Y	12	193	n/a	Drains to CWF	no classification	Intermediate	Dry Crossing
	7.06	S132	Marvin Creek	Perennial	0	Y	25	88	n/a	CWF	ATW, STS	Intermediate	Dry Crossing
	8.17	S236a	UNT to Blacksmith Run	Intermittent	0.08	Y	6	155	n/a	Drains to CWF	Drains to TNR	Minor	Dry Crossing
	8.71	S031	Blacksmith Run	Perennial	1	Y	32	152	n/a	CWF	TNR, Drains to ATW, STS	Intermediate	Dry Crossing
	9.03	S032	UNT to Blacksmith Run	Intermittent	0.25	-	10	39	n/a	Drains to CWF	Drains to ATW, TNR, STS	Minor	Dry Crossing
	9.08	S033	UNT to Blacksmith Run	Perennial	0.5	Y	30	116	n/a	CWF	Drains to ATW, TNR, STS	Intermediate	Dry Crossing
	9.19	S252a	UNT to Blacksmith Run	Intermittent	0.05	Y	2	80	n/a	Drains to CWF	Drains to TNR	Minor	Dry Crossing
	9.53	S251a	UNT to Blacksmith Run	Intermittent	0.08	-	3	61	n/a	Drains to CWF	Drains to TNR	Minor	Dry Crossing
	9.87	S250a	UNT to Blacksmith Run	Intermittent	0	-	2	41	n/a	Drains to CWF	Drains to TNR	Minor	Dry Crossing
	9.88	S249a	UNT to Blacksmith Run	Intermittent	0.08	Y	4	121	n/a	Drains to CWF	Drains to TNR	Minor	Dry Crossing
	9.9	S248a	UNT to Blacksmith Run	Perennial	0.17	Y	5	122	n/a	CWF	Drains to TNR	Minor	Dry Crossing

TABLE E-1

Waterbodies Within Workspace or Crossed by the Northern Access 2016 Project

Facility/ State	Mile-post	Stream ID	Stream Name	Flow Regime	Water Depth (feet)	Pipeline Crosses Stream? (as opposed to Stream in Workspace Only)	Crossing Width[b] (feet)	Length of Stream in ROW[c] (feet)	New York Water Standard[d]	PA Chapter 93 Classification[e]	PAFBC Stream Designation[f]	FERC Classification	Proposed Crossing Method[g, h]
	9.92	S247a	UNT to Blacksmith Run	Ephemeral	0.08	Y	4	105	n/a	Drains to CWF	Drains to TNR	Minor	Dry Crossing
	9.95	S246a	UNT to Blacksmith Run	Intermittent	0.08	Y	4	187	n/a	Drains to CWF	Drains to TNR	Minor	Dry Crossing
	10.85	S192a	UNT to Cole Creek	Intermittent	0.08	Y	4	104	n/a	Drains to CWF	no classification	Minor	Dry Crossing
	10.87	S191a	UNT to Cole Creek	Ephemeral	0	Y	4	112	n/a	Drains to CWF	no classification	Minor	Dry Crossing
	10.88	S190a	UNT to Cole Creek	Intermittent	0	Y	3	129	n/a	Drains to CWF	no classification	Minor	Dry Crossing
	10.89	S189a	UNT to Cole Creek	Intermittent	0	Y	4	134	n/a	CWF	no classification	Minor	Dry Crossing
	10.94	S113a	UNT to Cole Creek	Ephemeral	0.08	-	1	30	n/a	CWF	Drains to TNR	Minor	Temporary Bridge
	11.09	S114a	UNT to Cole Creek	Intermittent	1	-	1	5	n/a	Drains to CWF	Drains to TNR	Minor	Temporary Bridge
	11.14	S193a	UNT to Cole Creek	Intermittent	0.08	Y	10	129	n/a	Drains to CWF	no classification	Minor	Dry Crossing
	11.18	S115a	UNT to Cole Creek	Ephemeral	1	-	1	105	n/a	Drains to CWF	Drains to TNR	Minor	Temporary Bridge
	11.2	S116a	UNT to Cole Creek	Intermittent	1	-	4	26	n/a	Drains to CWF	Drains to TNR	Minor	Temporary Bridge
	11.26	S194a	UNT to Cole Creek	Intermittent	0.08	Y	4	15	n/a	Drains to CWF	no classification	Minor	Dry Crossing
	11.28	S195a	UNT to Cole Creek	Intermittent	0.08	-	2	46	n/a	Drains to CWF	no classification	Minor	Dry Crossing
	11.29	S118a	UNT to Cole Creek	Ephemeral	0.08	-	1	51	n/a	Drains to CWF	Drains to TNR	Minor	Temporary Bridge

TABLE E-1

Waterbodies Within Workspace or Crossed by the Northern Access 2016 Project

Facility/ State	Mile-post	Stream ID	Stream Name	Flow Regime	Water Depth (feet)	Pipeline Crosses Stream? (as opposed to Stream in Workspace Only)	Crossing Width[b] (feet)	Length of Stream in ROW[c] (feet)	New York Water Standard[d]	PA Chapter 93 Classification[e]	PAFBC Stream Designation[f]	FERC Classification	Proposed Crossing Method[g, h]
	11.3	S117a	UNT to Cole Creek	Intermittent	0.08	-	1	101	n/a	Drains to CWF	Drains to TNR	Minor	Temporary Bridge
	11.3	S119a	UNT to Cole Creek	Ephemeral	0.08	-	1	9	n/a	Drains to CWF	Drains to TNR	Minor	Temporary Bridge
	11.36	S196a	UNT to Cole Creek	Intermittent	0	Y	4	120	n/a	Drains to CWF	no classification	Minor	Dry Crossing
	11.37	S197a	UNT to Cole Creek	Ephemeral	0	Y	3	31	n/a	Drains to CWF	no classification	Minor	Dry Crossing
	11.42	S120a	UNT to Cole Creek	Ephemeral	0.08	-	1	437	n/a	Drains to CWF	Drains to TNR	Minor	Temporary Bridge
	11.43	S121a	UNT to Cole Creek	Ephemeral	0.08	-	1	13	n/a	Drains to CWF	Drains to TNR	Minor	Temporary Bridge
	12.05	S63a	UNT to Potato Creek	Intermittent	0.333	Y	6	78	n/a	Drains to CWF	no classification	Minor	Dry Crossing
	12.28	S235a	UNT to Potato Creek	Ephemeral	0	Y	10	128	n/a	Drains to TSF	no classification	Minor	Dry Crossing
	12.33	S200a	UNT to Potato Creek	Intermittent	0	Y	6	106	n/a	Drains to TSF	no classification	Minor	Dry Crossing
	12.77	S70a	UNT to Potato Creek	Ephemeral	0.167	Y	4	139	n/a	Drains to TSF	no classification	Minor	Dry Crossing
	12.8	S62a	Potato Creek	Perennial	2	Y	80	84	n/a	TSF	no classification	Intermediate	Coffer/Bladder Dam
	13.18	S188a	UNT to Potato Creek	Intermittent	0	-	4	45	n/a	Drains to TSF	no classification	Minor	Dry Crossing
	13.28	S187a	UNT to Potato Creek	Ephemeral	0	Y	1	78	n/a	Drains to TSF	no classification	Minor	Dry Crossing
	13.95	S179a	Cloverlot Hollow	Perennial	0.5	Y	30	152	n/a	CWF	no classification	Intermediate	Dry Crossing

TABLE E-1

Waterbodies Within Workspace or Crossed by the Northern Access 2016 Project

Facility/ State	Mile-post	Stream ID	Stream Name	Flow Regime	Water Depth (feet)	Pipeline Crosses Stream? (as opposed to Stream in Workspace Only)	Crossing Width[b] (feet)	Length of Stream in ROW[c] (feet)	New York Water Standard[d]	PA Chapter 93 Classification[e]	PAFBC Stream Designation[f]	FERC Classification	Proposed Crossing Method[g, h]
	13.99	S199a	Pierce Brook	Perennial	0.5	Y	4	240	n/a	CWF	no classification	Minor	Dry Crossing
	14.75	S044	UNT to Cloverlot Hollow	Ephemeral	0	-	4	64	n/a	Drains to CWF	no classification	Minor	Dry Crossing
	14.76	S045	UNT to Cloverlot Hollow	Ephemeral	0	-	4	77	n/a	Drains to CWF	no classification	Minor	Dry Crossing
	14.79	S046	UNT to Cloverlot Hollow	Ephemeral	0	-	4	19	n/a	Drains to CWF	no classification	Minor	Dry Crossing
	15.33	S110a	UNT to Kent Hollow	Ephemeral	0.04	-	1	26	n/a	Drains to CWF	no classification	Minor	Temporary Bridge
	15.34	S108a	UNT to Kent Hollow	Intermittent	0.04	Y	1	86	n/a	Drains to CWF	no classification	Minor	Dry Crossing
	15.34	S109a	UNT to Kent Hollow	Intermittent	0.04	-	1	25	n/a	Drains to CWF	no classification	Minor	Temporary Bridge
	15.36	S047	UNT to Kent Hollow	Ephemeral	0	-	3	178	n/a	Drains to CWF	no classification	Minor	Dry Crossing
	15.37	S050	UNT to Kent Hollow	Ephemeral	0	-	4	66	n/a	Drains to CWF	no classification	Minor	Dry Crossing
	15.38	S048	UNT to Kent Hollow	Ephemeral	0	Y	6	239	n/a	Drains to CWF	no classification	Minor	Dry Crossing
	15.66	S051	Kent Hollow	Perennial	0.5	Y	25	84	n/a	CWF	no classification	Intermediate	Dry Crossing
	16.09	S281a	UNT to Champlin Hollow	Ephemeral	0	Y	4	82	n/a	Drains to CWF	no classification	Minor	Dry Crossing
	16.14	S280a	UNT to Champlin Hollow	Ephemeral	0	Y	4	75	n/a	Drains to CWF	no classification	Minor	Dry Crossing
	16.49	S26a	Champlin Hollow	Intermittent	0	Y	6	82	n/a	CWF	no classification	Minor	Dry Crossing

TABLE E-1

Waterbodies Within Workspace or Crossed by the Northern Access 2016 Project

Facility/ State	Mile-post	Stream ID	Stream Name	Flow Regime	Water Depth (feet)	Pipeline Crosses Stream? (as opposed to Stream in Workspace Only)	Crossing Width[b] (feet)	Length of Stream in ROW[c] (feet)	New York Water Standard[d]	PA Chapter 93 Classification[e]	PAFBC Stream Designation[f]	FERC Classification	Proposed Crossing Method[g, h]
	18.00	S32a	Allegheny River	Perennial	2	Y	80	77	n/a	CWF	no classification	Intermediate	HDD
	18.45	S33a	UNT to Rock Run	Intermittent	0.083	-	2	52	n/a	Drains to CWF	no classification	Minor	Bore
	19.45	S3c	UNT to Newell Creek	Intermittent	0.33	Y	6	76	n/a	CWF	no classification	Minor	Dry Crossing
	19.62	S2c	UNT to Newell Creek	Intermittent	0	Y	2	82	n/a	CWF	no classification	Minor	Dry Crossing
	19.71	S1c	UNT to Newell Creek	Ephemeral	0	Y	3	94	n/a	CWF	no classification	Minor	Dry Crossing
	19.79	S12c	UNT to Newell Creek	Intermittent	0.167	Y	3	80	n/a	Drains to CWF	no classification	Minor	Dry Crossing
	20.11	S4c	Newell Creek	Perennial	1	Y	12	97	n/a	CWF	no classification	Intermediate	Dry Crossing
	20.15	S11c	UNT to Newell Creek	Intermittent	0.08	Y	2	40	n/a	Drains to CWF	no classification	Minor	Dry Crossing
	20.35	S225a	UNT to Newell Creek	Perennial	0.17	Y	4	77	n/a	Drains to CWF	no classification	Minor	Dry Crossing
	20.47	S226a	UNT to Newell Creek	Intermittent	0.08	Y	10	76	n/a	Drains to CWF	no classification	Minor	Dry Crossing
	20.59	S227a	UNT to Newell Creek	Perennial	0.25	Y	10	80	n/a	CWF	no classification	Minor	Dry Crossing
	20.72	S228a	UNT to Newell Creek	Intermittent	0.08	-	10	20	n/a	Drains to CWF	no classification	Minor	Dry Crossing
	20.74	S229a	UNT to Newell Creek	Ephemeral	0	-	10	11	n/a	Drains to CWF	no classification	Minor	Dry Crossing
	20.82	S30a	UNT to Kent Hollow	Ephemeral	0	Y	2	152	n/a	Drains to CWF	no classification	Minor	Dry Crossing

TABLE E-1

Waterbodies Within Workspace or Crossed by the Northern Access 2016 Project

Facility/ State	Mile-post	Stream ID	Stream Name	Flow Regime	Water Depth (feet)	Pipeline Crosses Stream? (as opposed to Stream in Workspace Only)	Crossing Width[b] (feet)	Length of Stream in ROW[c] (feet)	New York Water Standard[d]	PA Chapter 93 Classification[e]	PAFBC Stream Designation[f]	FERC Classification	Proposed Crossing Method[g, h]
	20.82	S230a	UNT to Newell Creek	Perennial	0.17	Y	15	84	n/a	Drains to CWF	no classification	Intermediate	Dry Crossing
	21.07	S31a	Open Brook	Perennial	0.5	-	12	83	n/a	CWF	no classification	Intermediate	Dry Crossing
	21.34	S234a	UNT to Newell Creek	Perennial	0	Y	4	79	n/a	Drains to CWF	no classification	Minor	Dry Crossing
	21.76	S67a	UNT Newell Creek	Perennial	0.167	Y	8	79	n/a	Drains to CWF	no classification	Minor	Dry Crossing
	21.88	S052	UNT to Newell Creek	Perennial	0.5	Y	12	89	n/a	CWF	no classification	Intermediate	Dry Crossing
	22.16	S053	UNT to Newell Creek	Perennial	0.125	Y	8	79	n/a	Drains to CWF	no classification	Minor	Dry Crossing
	22.61	S054	UNT to Newell Creek	Ephemeral	0	Y	12	80	n/a	Drains to CWF	no classification	Intermediate	Dry Crossing
	22.63	S055	UNT to Newell Creek	Ephemeral	0	Y	12	99	n/a	Drains to CWF	no classification	Intermediate	Dry Crossing
	22.95	S056	UNT to Newell Creek	Ephemeral	0	Y	3	111	n/a	Drains to CWF	no classification	Minor	Dry Crossing
	22.96	S057	UNT to Newell Creek	Intermittent	0.1	Y	10	106	n/a	Drains to CWF	no classification	Minor	Dry Crossing
	22.98	S059	UNT to Newell Creek	Ephemeral	0	-	12	95	n/a	Drains to CWF	no classification	Intermediate	Dry Crossing
	23.03	S060	UNT to Newell Creek	Perennial	0.33	Y	8	119	n/a	CWF	no classification	Minor	Dry Crossing
	23.06	S061	UNT to Newell Creek	Ephemeral	0	Y	4	349	n/a	Drains to CWF	no classification	Minor	Dry Crossing
	23.4	S129a	UNT to Newell Creek	Ephemeral	0	-	1	22	n/a	Drains to CWF	no classification	Minor	Temporary Bridge

TABLE E-1

Waterbodies Within Workspace or Crossed by the Northern Access 2016 Project

Facility/ State	Mile-post	Stream ID	Stream Name	Flow Regime	Water Depth (feet)	Pipeline Crosses Stream? (as opposed to Stream in Workspace Only)	Crossing Width[b] (feet)	Length of Stream in ROW[c] (feet)	New York Water Standard[d]	PA Chapter 93 Classification[e]	PAFBC Stream Designation[f]	FERC Classification	Proposed Crossing Method[g, h]
	23.57	S34a	UNT to Barden Brook	Intermittent	0	-	5	5	n/a	CWF	no classification	Minor	Dry Crossing
	23.63	S35a	UNT to Barden Brook	Ephemeral	0	Y	2	67	n/a	Drains to CWF	no classification	Minor	Dry Crossing
	23.63	S36a	UNT to Barden Brook	Ephemeral	0	Y	2	55	n/a	Drains to CWF	no classification	Minor	Dry Crossing
	23.77	S37a	UNT to Barden Brook	Ephemeral	0	-	2	12	n/a	Drains to CWF	no classification	Minor	Dry Crossing
	23.78	S39a	UNT to Barden Brook	Ephemeral	0	-	2	55	n/a	Drains to CWF	no classification	Minor	Dry Crossing
	23.79	S38a	UNT to Barden Brook	Intermittent	0.083	Y	4	86	n/a	Drains to CWF	no classification	Minor	Dry Crossing
	23.88	S41a	UNT to Barden Brook	Ephemeral	0	Y	2	76	n/a	Drains to CWF	no classification	Minor	Dry Crossing
	24.06	S57a2	UNT to Barden Brook	Perennial	0.25	Y	4	76	n/a	CWF	no classification	Minor	Dry Crossing
	24.49	S58a	UNT to Barden Brook	Ephemeral	0	-	2	51	n/a	Drains to CWF	no classification	Minor	Dry Crossing
	24.59	S59a	UNT to Barden Brook	Ephemeral	0	-	4	76	n/a	Drains to CWF	no classification	Minor	Dry Crossing
	24.85	S241a	UNT to Barden Brook	Perennial	0.33	Y	10	76	n/a	Drains to CWF	no classification	Minor	Dry Crossing
	24.87	S243a	Barden Brook	Perennial	1	Y	6	78	n/a	CWF	no classification	Minor	Dry Crossing
	24.87	S244a	UNT to Barden Brook	Perennial	0.08	-	4	145	n/a	Drains to CWF	no classification	Minor	Dry Crossing
	24.88	S245a	UNT to Barden Brook	Ephemeral	0	-	1	84	n/a	Drains to CWF	no classification	Minor	Dry Crossing

TABLE E-1

Waterbodies Within Workspace or Crossed by the Northern Access 2016 Project

Facility/ State	Mile-post	Stream ID	Stream Name	Flow Regime	Water Depth (feet)	Pipeline Crosses Stream? (as opposed to Stream in Workspace Only)	Crossing Width[b] (feet)	Length of Stream in ROW[c] (feet)	New York Water Standard[d]	PA Chapter 93 Classification[e]	PAFBC Stream Designation[f]	FERC Classification	Proposed Crossing Method[g, h]
	25.23	S204a	UNT to Barden Brook	Intermittent	0.08	Y	6	79	n/a	Drains to CWF	no classification	Minor	Dry Crossing
	25.24	S202a	UNT to Barden Brook	Ephemeral	0	-	4	16	n/a	Drains to CWF	no classification	Minor	Dry Crossing
	25.24	S203a	UNT to Barden Brook	Ephemeral	0	Y	4	77	n/a	Drains to CWF	no classification	Minor	Dry Crossing
	25.7	S198a	UNT to McCrea Run	Ephemeral	0.08	Y	4	52	n/a	Drains to CWF	no classification	Minor	Dry Crossing
	25.73	S201a	UNT to McCrea Run	Ephemeral	0	-	4	109	n/a	Drains to CWF	no classification	Minor	Dry Crossing
	25.77	S25c	UNT to McCrea Run	Ephemeral	0.08	-	1	6	n/a	Drains to CWF	no classification	Minor	Dry Crossing
	25.78	S23c	UNT to McCrea Run	Intermittent	0.08	-	4	14	n/a	Drains to CWF	no classification	Minor	Dry Crossing
	25.78	S24c	UNT to McCrea Run	Perennial	0.33	Y	8	86	n/a	CWF	no classification	Minor	Dry Crossing
	26.33	S21c	McCrea Run	Intermittent	0.25	Y	2	77	n/a	CWF	no classification	Minor	Dry Crossing
	26.57	S19c	UNT to McCrea Run	Ephemeral	0	Y	3	78	n/a	Drains to CWF	no classification	Minor	Dry Crossing
	26.87	S13c	UNT to Oswayo Creek	Ephemeral	0	-	2	36	n/a	CWF	no classification	Minor	Dry Crossing
	27.6	S064	Oswayo Creek	Perennial	2	Y	85	77	n/a	WWF	no classification	Intermediate	Dry Crossing
New York													
Allegany													
	28.14	S100a	UNT to Bells Brook	Intermittent	0.5	-	6	25	Drains to C	n/a	no classification	Minor	Temporary

TABLE E-1

Waterbodies Within Workspace or Crossed by the Northern Access 2016 Project

Facility/ State	Mile-post	Stream ID	Stream Name	Flow Regime	Water Depth (feet)	Pipeline Crosses Stream? (as opposed to Stream in Workspace Only)	Crossing Width[b] (feet)	Length of Stream in ROW[c] (feet)	New York Water Standard[d]	PA Chapter 93 Classification[e]	PAFBC Stream Designation[f]	FERC Classification	Proposed Crossing Method[g, h]
													Bridge
	28.64	S3a	UNT to Bells Brook	Intermittent	0.083	Y	4	99	Drains to C	n/a	no classification	Minor	Dry Crossing
	29.17	S2a	UNT to Bells Brook	Intermittent	0.083	Y	8	80	Drains to C	n/a	no classification	Minor	Dry Crossing
	30.25	S97a	UNT to Bells Brook	Intermittent	0.17	-	3	114	Drains to C	n/a	no classification	Minor	Temporary Bridge
	30.25	S98a	UNT to Bells Brook	Ephemeral	0.17	-	1	201	Drains to C	n/a	no classification	Minor	Temporary Bridge
	30.29	S99a	UNT to Bells Brook	Intermittent	0.08	-	4	23	Drains to C	n/a	no classification	Minor	Temporary Bridge
	30.94	S121	Narvoo Hollow	Perennial	0.33	Y	14	171	C	n/a	no classification	Intermediate	Dry Crossing
	30.98	S123	UNT to Narvoo Hollow	Intermittent	0	Y	5	77	Drains to C	n/a	no classification	Minor	Dry Crossing
	31.69	S6a	UNT to Deer Creek	Ephemeral	0	Y	4	119	Drains to C	n/a	no classification	Minor	Dry Crossing
	31.74	S7a	Deer Creek	Perennial	0.5	Y	10	108	C	n/a	no classification	Minor	Dry Crossing
	31.77	S101a	Deer Creek	Perennial	1	-	12	27	C	n/a	no classification	Intermediate	Temporary Bridge
	32.17	S5a	UNT to Deer Creek	Intermittent	0.083	Y	1	83	Drains to C	n/a	no classification	Minor	Dry Crossing/Temporary Bridge
	32.17	S102a	UNT to Deer Creek	Intermittent	0.25	-	1	21	Drains to C	n/a	no classification	Minor	Temporary Bridge
	32.17	S103a	UNT to Deer Creek	Intermittent	0.08	Y	1	190	Drains to C	n/a	no classification	Minor	Dry Crossing/T

TABLE E-1

Waterbodies Within Workspace or Crossed by the Northern Access 2016 Project

Facility/ State	Mile-post	Stream ID	Stream Name	Flow Regime	Water Depth (feet)	Pipeline Crosses Stream? (as opposed to Stream in Workspace Only)	Crossing Width[b] (feet)	Length of Stream in ROW[c] (feet)	New York Water Standard[d]	PA Chapter 93 Classification[e]	PAFBC Stream Designation[f]	FERC Classification	Proposed Crossing Method[g, h]
													emporary Bridge
	32.18	S105a	UNT to Deer Creek	Intermittent	0.17	-	1	49	Drains to C	n/a	no classification	Minor	Temporary Bridge
	32.19	S4a	UNT to Deer Creek	Ephemeral	0	Y	10	83	Drains to C	n/a	no classification	Minor	Dry Crossing
	32.2	S106a	UNT to Deer Creek	Ephemeral	0.17	-	1	83	Drains to C	n/a	no classification	Minor	Temporary Bridge
	34.27	S069	UNT to Wolf Creek	Perennial	0.5	Y	9	211	C	n/a	no classification	Minor	Dry Crossing
	34.77	S068	n/a	Dry Ditch	0	Y	0	163	Drains to C	n/a	no classification	Minor	Dry Crossing
	35.08	S41b	Wolf Creek	Perennial	0.5	Y	20	83	C(T)	n/a	no classification	Intermediate	Dry Crossing
	35.14	S40b	UNT to Wolf Creek	Perennial	0.167	Y	15	136	C	n/a	no classification	Intermediate	Dry Crossing
	36.05	S39b	UNT to Wolf Creek	Intermittent	0.167	Y	6	121	C	n/a	no classification	Minor	Dry Crossing
	36.07	S130a	UNT to Wolf Creek	Intermittent	0.08	-	1	149	Drains to C	n/a	no classification	Minor	Temporary Bridge
	36.07	S132a	UNT to Wolf Creek	Ephemeral	0	-	1	137	Drains to C	n/a	no classification	Minor	Temporary Bridge
	36.07	S133a	UNT to Wolf Creek	Ephemeral	0.08	-	1	95	Drains to C	n/a	no classification	Minor	Temporary Bridge
	36.07	S134a	UNT to Wolf Creek	Intermittent	0.17	-	2	26	Drains to C	n/a	no classification	Minor	Temporary Bridge
	36.08	S135a	UNT to Wolf Creek	Intermittent	0.08	-	1	22	Drains to C	n/a	no classification	Minor	Temporary Bridge

TABLE E-1

Waterbodies Within Workspace or Crossed by the Northern Access 2016 Project

Facility/ State	Mile-post	Stream ID	Stream Name	Flow Regime	Water Depth (feet)	Pipeline Crosses Stream? (as opposed to Stream in Workspace Only)	Crossing Width[b] (feet)	Length of Stream in ROW[c] (feet)	New York Water Standard[d]	PA Chapter 93 Classification[e]	PAFBC Stream Designation[f]	FERC Classification	Proposed Crossing Method[g, h]
	36.08	S136a	UNT to Wolf Creek	Intermittent	0.17	-	10	28	C	n/a	no classification	Minor	Temporary Bridge
	36.45	S137a	UNT to Wolf Creek	Ephemeral	0	-	2	6	Drains to C	n/a	no classification	Minor	Temporary Bridge
	37.11	S138a	UNT to Wolf Run	Ephemeral	0	-	1	32	Drains to C	n/a	no classification	Minor	Temporary Bridge
Cattaraugus													
	33.29	S284a	Dodge Creek	Perennial	0	Y	40	78	C(T)	n/a	no classification	Minor	Dry Crossing
	33.71	S285a	UNT to Dodge Creek	Perennial	0	Y	3	79	Drains to C(T)	n/a	no classification	Intermediate	Dry Crossing
	34.16	S286a	Wolf Creek	Perennial	1	Y	20	79	C(T)	n/a	no classification	Intermediate	Dry Crossing
	37.19	S139a	UNT to Wolf Run	Ephemeral	0	-	1	33	Drains to C	n/a	no classification	Minor	Temporary Bridge
	37.28	S140a	UNT to Wolf Run	Intermittent	0.17	-	2	26	Drains to C	n/a	no classification	Minor	Temporary Bridge
	37.61	S141a	Wolf Run	Perennial	0.5	-	20	26	Drains to C	n/a	no classification	Intermediate	Temporary Bridge
	37.63	S38b	Wolf Run	Perennial	0.67	Y	20	75	C	n/a	no classification	Intermediate	Dry Crossing
	37.9	S37b1	UNT to Wolf Run	Ephemeral	0	Y	10	137	C	n/a	no classification	Minor	Dry Crossing
	37.92	S37b	UNT to Wolf Run	Ephemeral	0.08	Y	10	136	Drains to C	n/a	no classification	Minor	Dry Crossing
	38.36	S36b	UNT to Haskell Creek	Perennial	0.25	Y	5	82	Drains to C	n/a	no classification	Minor	Dry Crossing

TABLE E-1

Waterbodies Within Workspace or Crossed by the Northern Access 2016 Project

Facility/ State	Mile-post	Stream ID	Stream Name	Flow Regime	Water Depth (feet)	Pipeline Crosses Stream? (as opposed to Stream in Workspace Only)	Crossing Width[b] (feet)	Length of Stream in ROW[c] (feet)	New York Water Standard[d]	PA Chapter 93 Classification[e]	PAFBC Stream Designation[f]	FERC Classification	Proposed Crossing Method[g, h]
	38.4	S35b	UNT to Haskell Creek	Perennial	0.167	Y	10	80	C	n/a	no classification	Minor	Dry Crossing
	39.55	S32b	Haskell Creek	Perennial	5	Y	20	77	C(T)*	n/a	no classification	Intermediate	Dry Crossing
	40.05	S31b	UNT to Haskell Creek	Intermittent	0.167	Y	5	77	Drains to C	n/a	no classification	Minor	Dry Crossing
	40.07	S207a	UNT to Haskell Creek	Ephemeral	0.08	Y	1	53	Drains to C*	n/a	no classification	Minor	Dry Crossing
	40.07	S30b	UNT to Haskell Creek	Perennial	0.33	Y	20	77	C*	n/a	no classification	Intermediate	Dry Crossing
	41.11	S206a	UNT to Haskell Creek	Intermittent	0.25	Y	4	93	C*	n/a	no classification	Minor	Dry Crossing
	41.12	S205a	UNT to Haskell Creek	Perennial	3	Y	6	93	C*	n/a	no classification	Minor	Dry Crossing
	42.57	S073	UNT to Oil Creek	Ephemeral	0.02	-	3	123	Drains to A	n/a	no classification	Minor	Dry Crossing
	42.84	S075	Oil Creek	Perennial	1	Y	70	190	A	n/a	no classification	Intermediate	Bore/Temporary Bridge Crossing
	43.3	S077	Ischua Creek	Perennial	0.08	Y	90	75	A*	n/a	no classification	Intermediate	HDD
	43.55	S126a	UNT to Ischua Creek	Perennial	0.33	-	1	12	Drains to A	n/a	no classification	Minor	Temporary Bridge
	43.85	S095	UNT to Ischua Creek	Ephemeral	0.08	Y	4	81	Drains to A	n/a	no classification	Minor	Dry Crossing
	43.87	S094	UNT to Ischua Creek	Perennial	0.5	Y	5	77	Drains to A	n/a	no classification	Minor	Dry Crossing
	43.95	S093	UNT to Ischua Creek	Ephemeral	0.5	Y	4	468	Drains to A	n/a	no classification	Minor	Dry

TABLE E-1

Waterbodies Within Workspace or Crossed by the Northern Access 2016 Project

Facility/ State	Mile-post	Stream ID	Stream Name	Flow Regime	Water Depth (feet)	Pipeline Crosses Stream? (as opposed to Stream in Workspace Only)	Crossing Width[b] (feet)	Length of Stream in ROW[c] (feet)	New York Water Standard[d]	PA Chapter 93 Classification[e]	PAFBC Stream Designation[f]	FERC Classification	Proposed Crossing Method[g, h]
													Crossing
	44.02	S091	UNT to Ischua Creek	Ephemeral	0	Y	3	45	Drains to A	n/a	no classification	Minor	Dry Crossing
	44.03	S088	UNT to Ischua Creek	Intermittent	0	Y	12	146	Drains to A	n/a	no classification	Intermediate	Dry Crossing
	44.11	S092	UNT to Ischua Creek	Ephemeral	0	Y	4	46	Drains to A	n/a	no classification	Minor	Dry Crossing
	44.6	S087	UNT to Gull Brook	Intermittent	0.08	-	4	42	Drains to A	n/a	no classification	Minor	Temporary Bridge
	44.97	S085	UNT to Gull Brook	Intermittent	0.5	Y	20	116	Drains to A	n/a	no classification	Intermediate	Dry Crossing
	44.98	S084	Gull Brook	Perennial	0.67	Y	20	203	A*	n/a	no classification	Intermediate	Dry Crossing
	45.15	S1d	UNT to Gull Brook	Intermittent	0.08	-	3	122	Drains to A	n/a	no classification	Minor	Dry Crossing
	46.09	S6d	UNT to Five Mile Creek	Perennial	0.25	Y	2	100	Drains to C	n/a	no classification	Minor	Dry Crossing
	46.12	S7d	UNT to Five Mile Creek	Perennial	0.167	Y	1	83	Drains to C	n/a	no classification	Minor	Dry Crossing
	47.04	S119	UNT to Five Mile Creek	Perennial	0.167	Y	10	101	Drains to C	n/a	no classification	Minor	Dry Crossing
	47.6	S120	UNT to Five Mile Creek	Ephemeral	0.167	Y	5	66	Drains to C	n/a	no classification	Minor	Dry Crossing
	48.08	S9d	UNT to Five Mile Creek	Intermittent	0.167	Y	3	168	Drains to A	n/a	no classification	Minor	Dry Crossing
	48.12	S099	n/a	Dry Ditch	0	-	0	18	Drains to A	n/a	no classification	Minor	Dry Crossing
	48.14	S098	Five Mile Creek	Perennial	1	Y	12	95	A	n/a	no classification	Intermediate	Dry

TABLE E-1

Waterbodies Within Workspace or Crossed by the Northern Access 2016 Project

Facility/ State	Mile-post	Stream ID	Stream Name	Flow Regime	Water Depth (feet)	Pipeline Crosses Stream? (as opposed to Stream in Workspace Only)	Crossing Width[b] (feet)	Length of Stream in ROW[c] (feet)	New York Water Standard[d]	PA Chapter 93 Classification[e]	PAFBC Stream Designation[f]	FERC Classification	Proposed Crossing Method[g, h]
													Crossing
	48.25	S096	UNT to Five Mile Creek	Ephemeral	0.5	-	20	73	C	n/a	no classification	Intermediate	Dry Crossing
	48.25	S097	UNT to Five Mile Creek	Ephemeral	0	Y	3	121	Drains to A	n/a	no classification	Minor	Dry Crossing
	50.08	S116	UNT to Wright's Creek	Ephemeral	0	Y	7	86	Drains to C	n/a	no classification	Minor	Dry Crossing
	50.21	S100	UNT to Wright's Creek	Intermittent	0.5	Y	2	50	Drains to C	n/a	no classification	Minor	Dry Crossing
	50.21	S101	UNT to Wright's Creek	Intermittent	0	Y	2	229	Drains to C	n/a	no classification	Minor	Dry Crossing
	50.74	S106	UNT to Ischua Creek	Intermittent	0.167	Y	5	87	Drains to C	n/a	no classification	Minor	Dry Crossing
	50.76	S107	UNT to Ischua Creek	Perennial	0.167	Y	7	109	Drains to C	n/a	no classification	Minor	Dry Crossing
	50.8	S108	UNT to Ischua Creek	Perennial	0.167	Y	4	80	Drains to C	n/a	no classification	Minor	Dry Crossing
	50.84	S109	UNT to Ischua Creek	Perennial	0.5	Y	5	81	Drains to C	n/a	no classification	Minor	Dry Crossing
	51.6	S49a	UNT to Ischua Creek	Perennial	0.25	Y	12	80	C	n/a	no classification	Intermediate	Dry Crossing
	51.62	S50a	UNT to Ischua Creek	Ephemeral	0.083	Y	1	62	Drains to C	n/a	no classification	Minor	Dry Crossing
	51.82	S52a	UNT to Ischua Creek	Ephemeral	0.083	-	2	15	Drains to C	n/a	no classification	Minor	Temporary Bridge
	51.86	S53a	UNT to Ischua Creek	Perennial	0.25	Y	18	109	Drains to C	n/a	no classification	Intermediate	Dry Crossing
	51.87	S54a	UNT to Ischua Creek	Intermittent	0.167	-	2	72	Drains to C	n/a	no classification	Minor	Dry

TABLE E-1

Waterbodies Within Workspace or Crossed by the Northern Access 2016 Project

Facility/ State	Mile-post	Stream ID	Stream Name	Flow Regime	Water Depth (feet)	Pipeline Crosses Stream? (as opposed to Stream in Workspace Only)	Crossing Width[b] (feet)	Length of Stream in ROW[c] (feet)	New York Water Standard[d]	PA Chapter 93 Classification[e]	PAFBC Stream Designation[f]	FERC Classification	Proposed Crossing Method[g, h]
													Crossing
	52.54	S57a	UNT to Ischua Creek	Perennial	0.25	Y	12	77	C	n/a	no classification	Intermediate	Dry Crossing
	52.6	S55a	UNT to Ischua Creek	Ephemeral	0	Y	2	113	Drains to C	n/a	no classification	Minor	Dry Crossing
	53.04	S124	UNT to Ischua Creek	Intermittent	0	Y	8	67	Drains to C	n/a	no classification	Minor	Dry Crossing
	53.06	S126	UNT to Ischua Creek	Perennial	0	Y	12	77	C	n/a	no classification	Intermediate	Dry Crossing
	53.13	S127	UNT to Ischua Creek	Intermittent	0	Y	10	142	Drains to C	n/a	no classification	Minor	Dry Crossing
	53.17	S128	UNT to Ischua Creek	Intermittent	0	Y	6	146	Drains to C	n/a	no classification	Minor	Dry Crossing
	53.56	S255a	UNT to Ischua Creek	Intermittent	0.8	Y	2	82	Drains to C	n/a	no classification	Minor	Dry Crossing
	53.57	S131	n/a	Dry Ditch	0	Y	0	88	Drains to C	n/a	no classification	Minor	Dry Crossing
	53.57	S254a	UNT to Ischua Creek	Intermittent	0.08	-	10	30	Drains to C	n/a	no classification	Minor	Dry Crossing
	53.68	S142a	UNT to Ischua Creek	Ephemeral	0	-	3	27	Drains to C	n/a	no classification	Minor	Temporary Bridge
	53.98	S211a	UNT to Storrs Creek	Ephemeral	0.08	Y	1	94	Drains to C	n/a	no classification	Minor	Dry Crossing
	54.84	S257a	UNT to Storrs Creek	Ephemeral	0.08	Y	4	127	Drains to C	n/a	no classification	Minor	Dry Crossing
	54.87	S44a	UNT to Storrs Creek	Intermittent	0.167	Y	4	104	Drains to C	n/a	no classification	Minor	Dry Crossing
	54.89	S258a	UNT to Storrs Creek	Ephemeral	0	Y	4	50	Drains to C	n/a	no classification	Minor	Dry

TABLE E-1

Waterbodies Within Workspace or Crossed by the Northern Access 2016 Project

Facility/ State	Mile-post	Stream ID	Stream Name	Flow Regime	Water Depth (feet)	Pipeline Crosses Stream? (as opposed to Stream in Workspace Only)	Crossing Width[b] (feet)	Length of Stream in ROW[c] (feet)	New York Water Standard[d]	PA Chapter 93 Classification[e]	PAFBC Stream Designation[f]	FERC Classification	Proposed Crossing Method[g, h]
													Crossing
	54.92	S259a	UNT to Storrs Creek	Ephemeral	0	Y	2	122	Drains to C	n/a	no classification	Minor	Dry Crossing
	54.93	S260a	UNT to Storrs Creek	Intermittent	0.08	-	3	3	Drains to C	n/a	no classification	Minor	Temporary Bridge
	54.96	S46a	UNT to Storrs Creek	Intermittent	0.083	Y	3	116	Drains to C	n/a	no classification	Minor	Dry Crossing
	55.07	S47a	UNT to Storrs Creek	Intermittent	0.083	Y	6	82	Drains to C	n/a	no classification	Minor	Dry Crossing
	55.18	S48a	Storrs Creek	Perennial	0.5	Y	40	75	C	n/a	no classification	Intermediate	Dry Crossing
	55.35	S214a	UNT to Storrs Creek	Ephemeral	0.08	Y	3	78	Drains to C	n/a	no classification	Minor	Dry Crossing
	55.37	S212a	UNT to Storrs Creek	Intermittent	0.08	Y	4	75	Drains to C	n/a	no classification	Minor	Dry Crossing
	55.78	S210a	UNT to Storrs Creek	Perennial	4	Y	10	94	C	n/a	no classification	Minor	Dry Crossing
	56.23	S71a	UNT to Boyce Run	Intermittent	0.083	Y	4	49	Drains to C	n/a	no classification	Minor	Dry Crossing
	56.24	S72a	UNT to Boyce Run	Ephemeral	0	Y	4	1079	Drains to C	n/a	no classification	Minor	Dry Crossing
	56.35	S73a	UNT to Boyce Run	Intermittent	0.083	Y	6	141	Drains to C	n/a	no classification	Minor	Dry Crossing
	56.44	S75a	UNT to Boyce Run	Perennial	0.417	Y	20	138	C	n/a	no classification	Intermediate	Dry Crossing
	56.49	S76a	UNT to Boyce Run	Ephemeral	0	Y	5	187	Drains to C	n/a	no classification	Minor	Dry Crossing
	56.96	S16a	Boyce Run	Perennial	0.25	Y	24	77	C	n/a	no classification	Intermediate	Dry

TABLE E-1

Waterbodies Within Workspace or Crossed by the Northern Access 2016 Project

Facility/ State	Mile-post	Stream ID	Stream Name	Flow Regime	Water Depth (feet)	Pipeline Crosses Stream? (as opposed to Stream in Workspace Only)	Crossing Width[b] (feet)	Length of Stream in ROW[c] (feet)	New York Water Standard[d]	PA Chapter 93 Classification[e]	PAFBC Stream Designation[f]	FERC Classification	Proposed Crossing Method[g, h]
													Crossing
	56.96	S17a	UNT to Boyce Run	Intermittent	0.083	-	1	139	Drains to C	n/a	no classification	Minor	Dry Crossing
	56.96	S18a	UNT to Boyce Run	Intermittent	0.083	Y	2	32	Drains to C	n/a	no classification	Minor	Dry Crossing
	58.01	S276a	UNT to Ischua Creek	Perennial	0.75	Y	30	123	C*	n/a	no classification	Intermediate	Dry Crossing
	59.02	S267a	UNT to Ischua Creek	Perennial	0.5	-	10	26	Drains to C	n/a	no classification	Minor	Temporary Bridge
	59.02	S268a	UNT to Ischua Creek	Perennial	0.5	Y	15	79	Drains to C	n/a	no classification	Intermediate	Dry Crossing
	59.02	S269a	UNT to Ischua Creek	Ephemeral	0	Y	2	119	Drains to C	n/a	no classification	Minor	Dry Crossing
	59.73	S15b	UNT to Ischua Creek	Perennial	1	Y	15	96	Drains to C	n/a	no classification	Intermediate	Dry Crossing
	61.17	S10a	UNT to Gulf Creek	Intermittent	0.083	Y	1	110	Drains to C	n/a	no classification	Minor	Dry Crossing
	61.39	S11a	UNT to Ischua Creek	Intermittent	0.083	-	3	99	Drains to C(T)	n/a	no classification	Minor	Dry Crossing
	61.6	S8a	UNT to Gulf Creek	Intermittent	0.083	Y	4	92	Drains to C	n/a	no classification	Minor	Dry Crossing
	62.35	S42a	Ischua Creek	Perennial	1.5	Y	40	77	C(T)*	n/a	no classification	Intermediate	HDD
	62.95	S19a	UNT to Ischua Creek	Ephemeral	0	Y	2	70	Drains to C	n/a	no classification	Minor	Dry Crossing
	62.96	S20a	UNT to Ischua Creek	Intermittent	0.167	Y	10	108	C	n/a	no classification	Minor	Dry Crossing
	63.24	S21a	UNT to Ischua Creek	Intermittent	0.25	Y	4	78	Drains to C	n/a	no classification	Minor	Dry Crossing

TABLE E-1

Waterbodies Within Workspace or Crossed by the Northern Access 2016 Project

Facility/ State	Mile-post	Stream ID	Stream Name	Flow Regime	Water Depth (feet)	Pipeline Crosses Stream? (as opposed to Stream in Workspace Only)	Crossing Width[b] (feet)	Length of Stream in ROW[c] (feet)	New York Water Standard[d]	PA Chapter 93 Classification[e]	PAFBC Stream Designation[f]	FERC Classification	Proposed Crossing Method[g, h]
	63.72	S24a	UNT to Ischua Creek	Ephemeral	0.083	Y	2	53	Drains to C(T)	n/a	no classification	Minor	Dry Crossing
	65.64	S223a	UNT to Lime Lake Outlet	Perennial	0.5	Y	20	77	Drains to C(TS)	n/a	no classification	Intermediate	Dry Crossing
	66.46	S26b	McKinstry Creek	Perennial	0.33	Y	25	126	C(TS)	n/a	no classification	Intermediate	Dry Crossing
	66.64	S25b	UNT to McKinstry Creek	Intermittent	0.08	Y	30	112	Drains to C(TS)	n/a	no classification	Intermediate	Dry Crossing
	67.32	S24b	UNT to Lime Lake Outlet	Intermittent	0.08	Y	15	130	C	n/a	no classification	Intermediate	Dry Crossing
	67.65	S217a	UNT to Lime Lake Outlet	Intermittent	0.08	Y	4	75	Drains to C	n/a	no classification	Minor	Dry Crossing
	67.71	S216a	UNT to Lime Lake Outlet	Intermittent	0	-	10	4	Drains to C	n/a	no classification	Minor	Temporary Bridge
	67.95	S27b	UNT to Lime Lake Outlet	Ephemeral	0.33	Y	5	192	Drains to C	n/a	no classification	Minor	Dry Crossing
	67.99	S28b	UNT to Lime Lake Outlet	Intermittent	0.08	Y	4	80	Drains to C	n/a	no classification	Minor	Dry Crossing
	68.15	S29b	UNT to Lime Lake Outlet	Perennial	0.25	Y	15	76	Drains to C(T)	n/a	no classification	Intermediate	Dry Crossing
	68.84	S42b	UNT to Lime Lake Outlet	Intermittent	0.25	Y	20	148	Drains to C(TS)	n/a	no classification	Intermediate	Dry Crossing
	69.03	S43b	UNT to Lime Lake Outlet	Intermittent	0.08	Y	6	93	Drains to C(TS)	n/a	no classification	Minor	Dry Crossing
	69.2	S44b	UNT to Lime Lake Outlet	Intermittent	0.25	Y	25	97	Drains to C(TS)	n/a	no classification	Intermediate	Dry Crossing
	69.37	S162a	UNT to Elton Creek	Ephemeral	0.08	-	4	25	Drains to C(TS)	n/a	no classification	Minor	Temporary Bridge

TABLE E-1

Waterbodies Within Workspace or Crossed by the Northern Access 2016 Project

Facility/ State	Mile-post	Stream ID	Stream Name	Flow Regime	Water Depth (feet)	Pipeline Crosses Stream? (as opposed to Stream in Workspace Only)	Crossing Width[b] (feet)	Length of Stream in ROW[c] (feet)	New York Water Standard[d]	PA Chapter 93 Classification[e]	PAFBC Stream Designation[f]	FERC Classification	Proposed Crossing Method[g, h]
	69.54	S45b	UNT to Elton Creek	Intermittent	0.167	Y	20	87	Drains to C(TS)	n/a	no classification	Intermediate	Dry Crossing
Erie													
	40.43	S81a	Elton Creek	Perennial	1	Y	100	227	C	n/a	no classification	Major	Dry Crossing
	70.47	S80a	UNT to Elton Creek	Ephemeral	0.083	-	1	70	Drains to C	n/a	no classification	Minor	Dry Crossing
	71.96	S262a	Cattaraugus Creek	Perennial	2	Y	100	77	Drains to B(T)	n/a	no classification	Major	Dry Crossing
	72.32	S261a	UNT to Cattaraugus Creek	Perennial	0	Y	30	75	C	n/a	no classification	Intermediate	Dry Crossing
	73.72	S13b	UNT to Cattaraugus Creek	Perennial	0.33	Y	25	105	Drains to C	n/a	no classification	Intermediate	Dry Crossing
	73.91	S12b	UNT to Cattaraugus Creek	Ephemeral	0	Y	3	94	Drains to C	n/a	no classification	Minor	Dry Crossing
	75.74	S11b	UNT to Dresser Creek	Intermittent	2	Y	12	104	Drains to C	n/a	no classification	Intermediate	Dry Crossing
	75.79	S10b	UNT to Dresser Creek	Intermittent	0.042	Y	5	126	Drains to C	n/a	no classification	Minor	Dry Crossing
	76.11	S9b	UNT to Dresser Creek	Intermittent	0.08	Y	25	76	Drains to C	n/a	no classification	Intermediate	Dry Crossing
	76.41	S8b	UNT to Dresser Creek	Intermittent	0.167	Y	8	82	Drains to C	n/a	no classification	Minor	Dry Crossing
	77.17	S7b	UNT to Spencer Brook	Ephemeral	0.08	Y	20	86	Drains to C	n/a	no classification	Intermediate	Dry Crossing
	77.31	S6b	UNT to Spencer Brook	Ephemeral	0.08	Y	20	77	Drains to C	n/a	no classification	Intermediate	Dry Crossing

TABLE E-1

Waterbodies Within Workspace or Crossed by the Northern Access 2016 Project

Facility/ State	Mile-post	Stream ID	Stream Name	Flow Regime	Water Depth (feet)	Pipeline Crosses Stream? (as opposed to Stream in Workspace Only)	Crossing Width[b] (feet)	Length of Stream in ROW[c] (feet)	New York Water Standard[d]	PA Chapter 93 Classification[e]	PAFBC Stream Designation[f]	FERC Classification	Proposed Crossing Method[g, h]
	77.83	S5b	UNT to Spencer Brook	Ephemeral	0	Y	3	174	Drains to C	n/a	no classification	Minor	Dry Crossing
	78.2	S4b	UNT to Spencer Brook	Intermittent	0.25	-	8	35	C	n/a	no classification	Minor	Dry Crossing
	78.77	S46b	UNT to Sprague Brook	Intermittent	0.33	Y	15	117	B	n/a	no classification	Intermediate	Dry Crossing
	80.99	S22b	UNT to Gears Gulf	Intermittent	0.25	Y	20	82	Drains to B	n/a	no classification	Intermediate	Dry Crossing
	81.37	S23b	UNT to East Branch Cazenova Creek	Intermittent	0.5	Y	2	89	Drains to B	n/a	no classification	Minor	Dry Crossing
	81.63	S219a	UNT to East Branch Cazenovia Creek	Perennial	0.05	Y	10	104	B	n/a	no classification	Minor	Dry Crossing
	82.32	S220a	UNT to East Branch Cazenovia Creek	Perennial	1	Y	6	81	Drains to B	n/a	no classification	Minor	Dry Crossing
	82.68	S221a	UNT to East Branch Cazenovia Creek	Perennial	0.33	Y	10	81	Drains to B	n/a	no classification	Minor	Dry Crossing
	83.26	S3b	UNT to Pipe Creek	Intermittent	0.167	Y	25	133	Drains to A	n/a	no classification	Intermediate	Dry Crossing
	83.78	S2b	UNT to East Branch Cazenovia Creek	Intermittent	0.167	Y	4	101	C	n/a	no classification	Minor	Dry Crossing
	86.8	S266a	UNT to Pipe Creek	Ephemeral	0	Y	1	387	Drains to A	n/a	no classification	Minor	Dry Crossing
	87.37	S222a	UNT to East Branch Cazenovia Creek	Intermittent	0.25	Y	8	92	Drains to B	n/a	no classification	Minor	Dry Crossing
	87.52	S3e	UNT to East Branch Cazenovia Creek	Intermittent	0	Y	4	113	Drains to B	n/a	no classification	Minor	Dry Crossing
	87.6	S2e	UNT to East Branch Cazenovia Creek	Ephemeral	0	-	2	96	Drains to B	n/a	no classification	Minor	Temporary Bridge

TABLE E-1

Waterbodies Within Workspace or Crossed by the Northern Access 2016 Project

Facility/ State	Mile-post	Stream ID	Stream Name	Flow Regime	Water Depth (feet)	Pipeline Crosses Stream? (as opposed to Stream in Workspace Only)	Crossing Width[b] (feet)	Length of Stream in ROW[c] (feet)	New York Water Standard[d]	PA Chapter 93 Classification[e]	PAFBC Stream Designation[f]	FERC Classification	Proposed Crossing Method[g, h]
	87.63	S1e	UNT to East Branch Cazenovia Creek	Intermittent	0	Y	4	80	Drains to B	n/a	no classification	Minor	Dry Crossing
	88.36	S266a	UNT to East Branch Cazenovia Creek	Perennial	0.5	Y	4	84	B	n/a	no classification	Minor	Dry Crossing
	89.22	S85a	UNT to Cazenovia Creek	Intermittent	0.083	Y	4	165	Drains to C	n/a	no classification	Minor	HDD
	89.25	S287a	UNT to Cazenovia Creek	Intermittent	0.5	-	3	16	Drains to C	n/a	no classification		HDD
	89.38	S82a	Cazenovia Creek	Perennial	1	Y	80	76	C	n/a	no classification	Intermediate	HDD
	89.61	S78a	UNT to Cazenovia Creek	Intermittent	0.083	-	7	118	Drains to C	n/a	no classification	Minor	Temporary Bridge
	89.61	S78a	UNT to Cazenovia Creek	Intermittent	0.083	-	7	118	Drains to C	n/a	no classification	Minor	Temporary Bridge
	89.82	S79a	UNT to Cazenovia Creek	Ephemeral	0	-	4	21	Drains to C	n/a	no classification	Minor	Temporary Bridge
	92.83	S127a	UNT to Tannery Brook	Perennial	0.33	-	2	25	Drains to C	n/a	no classification	Minor	Temporary Bridge
	93.44	S224a	UNT to Tannery Brook	Intermittent	0.25	Y	4	86	Drains to C	n/a	no classification	Minor	Dry Crossing
	94.94	S19b	UNT to Buffalo Creek	Intermittent	0.042	Y	20	54	D	n/a	no classification	Intermediate	Dry Crossing
	96.27	S272a	UNT to Buffalo Creek	Perennial	0.5	Y	3	215	Drains to C	n/a	no classification	Minor	Dry Crossing
	96.74	S273a	Buffalo Creek	Perennial	3	Y	60	76	A	n/a	no classification	Intermediate	HDD
ACCESS ROADS													
Pennsylvania													
McKean													
	AR 1	S002	Warner Brook	Intermittent	0.25	-	3	8	n/a	Drains to	Drains to ATW,	Minor	Existing

TABLE E-1

Waterbodies Within Workspace or Crossed by the Northern Access 2016 Project

Facility/ State	Mile-post	Stream ID	Stream Name	Flow Regime	Water Depth (feet)	Pipeline Crosses Stream? (as opposed to Stream in Workspace Only)	Crossing Width[b] (feet)	Length of Stream in ROW[c] (feet)	New York Water Standard[d]	PA Chapter 93 Classification[e]	PAFBC Stream Designation[f]	FERC Classification	Proposed Crossing Method[g, h]
										HQ-CWF	TNR, STS		Culvert
	AR 23	S86a	UNT to McCrea Run	Perennial	0.25	-	4	14	n/a	CWF	no classification	Minor	Existing Culvert
	AR 23	S87a	UNT to McCrea Run	Perennial	0.33	-	6	211	n/a	CWF	no classification	Minor	Existing Culvert
	AR 23	S88a	UNT to McCrea Run	Perennial	0.25	-	4	26	n/a	Drains to CWF	no classification	Minor	Existing Culvert
	AR 23	S89a	UNT to McCrea Run	Intermittent	0.17	-	6	28	n/a	Drains to CWF	no classification	Minor	Existing Culvert
	AR 23	S90a	UNT to McCrea Run	Ephemeral	2	-	1	770	n/a	Drains to CWF	no classification	Minor	Existing Culvert
	AR 23	S91a	UNT to McCrea Run	Ephemeral	0.08	-	1	11	n/a	Drains to CWF	no classification	Minor	Existing Culvert
	AR 23	S92a	UNT to McCrea Run	Ephemeral	0.08	-	1.5	405	n/a	Drains to CWF	no classification	Minor	Existing Culvert
	AR 23	S93a	UNT to McCrea Run	Ephemeral	0.08	-	1	7	n/a	Drains to CWF	no classification	Minor	Existing Culvert
	AR 23	S94a	UNT to McCrea Run	Ephemeral	0.08	-	1	1	n/a	Drains to CWF	no classification	Minor	Existing Culvert
	AR 23	S96a	McCrea Run	Perennial	0.5	-	8	25	n/a	CWF	no classification	Minor	Existing Culvert
	AR 15	S112a	Cloverlot Hollow	Perennial	0.33	-	6	247	n/a	CWF	no classification	Minor	Existing Culvert
	AR 20	S122a	UNT to Barden Brook	Ephemeral	0.17	-	1	25	n/a	CWF	no classification	Minor	Existing Culvert
	AR 20	S123a	UNT to Barden Brook	Ephemeral	0.08	-	1	2	n/a	Drains to CWF	no classification	Minor	Existing Culvert
	AR 20	S124a	UNT to Barden Brook	Ephemeral	0.08	-	1	25	n/a	Drains to	no classification	Minor	Existing

TABLE E-1

Waterbodies Within Workspace or Crossed by the Northern Access 2016 Project

Facility/ State	Mile-post	Stream ID	Stream Name	Flow Regime	Water Depth (feet)	Pipeline Crosses Stream? (as opposed to Stream in Workspace Only)	Crossing Width[b] (feet)	Length of Stream in ROW[c] (feet)	New York Water Standard[d]	PA Chapter 93 Classification[e]	PAFBC Stream Designation[f]	FERC Classification	Proposed Crossing Method[g, h]
										CWF			Culvert
	AR 18	S125a	Newell Creek	Perennial	0.5	-	6	34	n/a	CWF	no classification	Minor	Existing Culvert
	AR 11	S128a	UNT to Irons Hollow	Intermittent	0.17	-	1	26	n/a	Drains to CWF	Drains to ATW, TNR, STS	Minor	Existing Culvert
	AR 4	S143a	UNT to Robbins Brook	Intermittent	0.25	-	4	46	n/a	Drains to HQ-CWF	Drains to ATW, TNR, STS	Minor	Existing Culvert
	AR 4	S144a	UNT to Robbins Brook	Perennial	0.33	-	4	30	n/a	Drains to HQ-CWF	Drains to ATW, TNR, STS	Minor	Existing Culvert
	AR 4 and AR 5	S145a	UNT to Robbins Brook	Ephemeral	0.25	-	3	55	n/a	Drains to HQ-CWF	Drains to ATW, TNR, STS	Minor	Existing Culvert
	AR 4	S146a	UNT to Robbins Brook	Intermittent	0.33	-	10	33	n/a	HQ-CWF	Drains to ATW, TNR, STS	Minor	Existing Culvert
	AR 4	S147a	UNT to Robbins Brook	Ephemeral	0.17	-	3	28	n/a	Drains to HQ-CWF	Drains to ATW, TNR, STS	Minor	Existing Culvert
	AR 8	S148a	UNT to Robbins Brook	Intermittent	0.17	-	2	25	n/a	HQ-CWF	Drains to ATW, TNR, STS	Minor	Existing Culvert
	AR 8	S149a	UNT to Robbins Brook	Perennial	0.17	-	2	25	n/a	Drains to HQ-CWF	Drains to ATW, TNR, STS	Minor	Existing Culvert
	AR 9	S150a	UNT to Irons Hollow	Intermittent	0.08	-	1	38	n/a	Drains to HQ-CWF	Drains to ATW, TNR, STS	Minor	Existing Culvert
	AR 9	S152a	UNT to Irons Hollow	Intermittent	0.08	-	2	35	n/a	Drains to CWF	Drains to ATW, TNR, STS	Minor	Existing Culvert
	AR 9	S154a	UNT to Irons Hollow	Intermittent	0.17	-	2	190	n/a	CWF	Drains to ATW, TNR, STS	Minor	Existing Culvert
	AR 2	S155a	UNT to Warner Brook	Intermittent	0.25	-	4	22	n/a	Drains to HQ-CWF	Drains to ATW, TNR, STS	Minor	Existing Culvert

TABLE E-1

Waterbodies Within Workspace or Crossed by the Northern Access 2016 Project

Facility/ State	Mile-post	Stream ID	Stream Name	Flow Regime	Water Depth (feet)	Pipeline Crosses Stream? (as opposed to Stream in Workspace Only)	Crossing Width[b] (feet)	Length of Stream in ROW[c] (feet)	New York Water Standard[d]	PA Chapter 93 Classification[e]	PAFBC Stream Designation[f]	FERC Classification	Proposed Crossing Method[g, h]
	AR 2	S158a	UNT to Warner Brook	Intermittent	0.08	-	1	43	n/a	Drains to HQ-CWF	Drains to ATW, TNR, STS	Minor	Existing Culvert
	AR 2	S160a	UNT to Warner Brook	Perennial	0.33	-	6	38	n/a	HQ-CWF	Drains to ATW, TNR, STS	Minor	Existing Culvert
	AR 2	S161a	UNT to Warner Brook	Ephemeral	0	-	1	2	n/a	Drains to HQ-CWF	Drains to ATW, TNR, STS	Minor	Existing Culvert
	AR 12A	S270a	UNT to Blacksmith Run	Intermittent	0.17	-	2	25	n/a	Drains to HQ-CWF	Drains to TNR	Minor	Existing Culvert
	AR 12A	S271a	UNT to Blacksmith Run	Intermittent	0.17	-	2	33	n/a	Drains to HQ-CWF	Drains to TNR	Minor	Existing Culvert
New York													
Allegany													
	AR24B	S100a	UNT to Bells Brook	Intermittent	0.5	n/a	6	6	Drains to C	n/a	n/a	Minor	Dry
	AR25	S97a	UNT to Bells Brook	Intermittent	0.17	n/a	3	3	Drains to C	n/a	n/a	Minor	Dry
	AR25	S98a	UNT to Bells Brook	Ephemeral	0.17	n/a	1	1	Drains to C	n/a	n/a	Minor	Dry
	AR25	S99a	UNT to Bells Brook	Intermittent	0.08	n/a	4	4	Drains to C	n/a	n/a	Minor	Dry
	AR26	S101a	Deer Creek	Perennial	1	n/a	12	12	C	n/a	n/a	Intermediate	Dry
	AR26	S103a	UNT to Deer Creek	Intermittent	0.08	n/a	1	1	Drains to C	n/a	n/a	Minor	Dry
	AR26	S105a	UNT to Deer Creek	Intermittent	0.17	n/a	1	1	Drains to C	n/a	n/a	Minor	Dry
	AR27B	S138a	UNT to Wolf Run	Ephemeral	0	n/a	1	1	Drains to C	n/a	n/a	Minor	Dry
Cattaraugus													
	AR27B	S139a	UNT to Wolf Run	Ephemeral	0	n/a	1	1	Drains to C	n/a	n/a	Minor	Dry
	AR27B	S140a	UNT to Wolf Run	Intermittent	0.17	n/a	2	2	Drains to C	n/a	n/a	Minor	Dry
	AR27C	S141a	Wolf Run	Perennial	0.5	n/a	25	25	CWF	n/a	n/a	Intermediate	Dry

TABLE E-1

Waterbodies Within Workspace or Crossed by the Northern Access 2016 Project

Facility/ State	Mile-post	Stream ID	Stream Name	Flow Regime	Water Depth (feet)	Pipeline Crosses Stream? (as opposed to Stream in Workspace Only)	Crossing Width[b] (feet)	Length of Stream in ROW[c] (feet)	New York Water Standard[d]	PA Chapter 93 Classification[e]	PAFBC Stream Designation[f]	FERC Classification	Proposed Crossing Method[g, h]
	AR31	S142a	UNT to Ischua Creek	Ephemeral	0	n/a	3	3	Drains to C	n/a	n/a	Minor	Dry
	AR37	S264a	Lime Lake Outlet	Perennial	1.5	n/a	40	40	C(TS)	n/a	n/a	Intermediate	Dry
	AR39	S162a	UNT to Elton Creek	Ephemeral	0.08	n/a	4	4	Drains to C(TS)	n/a	n/a	Minor	Dry
Erie													
	AR47	S127a	UNT to Tannery Brook	Perennial	0.33	n/a	2	2	Drains to C	n/a	n/a	Minor	Dry
HINSDALE INTERCONNECT													
	n/a	S076	UNT to Ischua Creek	Intermittent				126	Drains to A	n/a	n/a	Minor	Bridge
ALL OTHER ABOVEGROUND FACILITY AND PIPE/CONTRACTOR YARD AREAS ASSOCIATED WITH/NEAR THE MAINLINE PIPELINE													
	No streams delineated.												

Notes:

n/a = not applicable

no classification = stream is not classified by PAFBC

a MC – McKean County, Pennsylvania, AL – Allegany County, New York, CA – Cattaraugus County, New York, ER – Erie County, New York.

b Crossing width is bank-to-bank width at time of survey. Although FERC identifies water width as crossing width, USACE regulates ordinary high water (OHW), which is generally bank-to-bank. Additionally, the water width varies significantly depending on season and precipitation levels.

c The construction ROW will be 75 feet wide through waterbodies. Measurements over 75 feet are a result of sinuous waterbodies or non-perpendicular crossings.

d New York State Water Quality Classification and Standards (NYSDEC 2013).

e Pennsylvania Chapter 93 Designated Use (PSU 2013).

f Stocked Trout Streams (STS) and Approved Trout Waters (ATW) (PAFBC 2014a, and 2014b).

g Proposed Crossing Methods:

Open cut – in stream excavation allowing continuous flow through work zone. Only proposed for streams larger than 25 feet wide where dry crossing and HDD/bore methods are not feasible.

Dry – Streams with perceptible flow will be crossed using a dam and flume or dam and pump method, enabling bypass of flow through or around a relatively dry work zone during construction. Any stream with no perceptible flow at the time of construction will be open cut. Larger streams may provide option to use a dry coffer dam or portal dam crossing method.

HDD/Bore – streams are proposed to be crossed by Horizontal Directional Drill or conventional bore (i.e. under the stream with no impact to substrate) pending completion of geotechnical studies and HDD design

h Time window for stream crossings will be based on state regulations and allowances.

TABLE E-1

Waterbodies Within Workspace or Crossed by the Northern Access 2016 Project

Facility/ State	Mile-post	Stream ID	Stream Name	Flow Regime	Water Depth (feet)	Pipeline Crosses Stream? (as opposed to Stream in Workspace Only)	Crossing Width[b] (feet)	Length of Stream in ROW[c] (feet)	New York Water Standard[d]	PA Chapter 93 Classification[e]	PAFBC Stream Designation[f]	FERC Classification	Proposed Crossing Method[g, h]

Fisheries and other classifications include:

Drains to – the stream has no identified Existing or Designated Use in Pennsylvania, or, has no designated water quality classification or standard in New York, and represents the nearest downstream classification.

Pennsylvania:

CWF – Cold Water Fishes (designated use) – maintenance or propagation, or both, of fish species including the family Salmonidae and additional flora and fauna which are indigenous to a cold water habitat.

WWF – Warm Water Fishes (designated use) – surface waters having quality which exceeds levels necessary to support propagation of fish, shellfish, and wildlife and recreation in and on the water by satisfying 25 PA Code §93.4b(a).

TSF – Trout Stocked Fisheries as classified by Pennsylvania Chapter 93 Designated Use

ATW – Approved Trout Waters; waters containing significant portions that are open to public fishing and are stocked with trout by PAFBC.

STS – Stocked Trout Streams as identified by PAFBC.

New York:

A – High quality water source that needs some additional treatment to meet New York State Department of Health drinking water standards.

B – Perennial waters that are best suited for recreation and fishing.

C(T) – Waters that are best suited for fishing and support trout populations.

C(TS) – Waters that are best suited for fishing and support trout spawning habitat.

C – Waters that are best suited for fishing.

D – Waters that are best suited for fishing but typically has low or intermittent flow.

TABLE E-2

Wetland Impacts for the Northern Access 2016 Project

Facility/ State/ County	Wetland ID Number	12-Digit Hydrologic Unit Code	Cover Class[b]	Milepost		Centerline Crossing Length (feet)	Acreage Within Additional Temporary Workspace	Acreage Within 25-ft-wide Temporary ROW	Acreage Within 50-ft-wide Permanent ROW [c]	Total Wetland Impacts (acres)[d]	Permanent Conversion of Vegetation to PEM (acres)[e]	Conversion or Selective PSS Maintenance (acres)[e]	Perman ent Fill
				From	To								
MAINLINE PIPELINE ROW													
Pennsylvania													
McKean													
	W001	050100010103	PEM	0.13	0.17	159	-	0.098	0.182	0.284	n/a	n/a	n/a
	W003	050100010102	PFO	0.37	1.05	150	-	0.067	0.171	0.238	0.091	0.147	n/a
	W153a	050100010104	PEM	1.13	1.14	6	-	-	0.010	0.010	n/a	n/a	n/a
	W004	050100010103	PFO	1.57	1.65	288	-	0.146	0.268	0.414	0.009	0.023	n/a
	W004	050100010103	PSS	1.65	1.71	450	-	0.292	0.512	0.804	n/a	n/a	n/a
	W006	050100010103	PEM	1.75	1.76	15	-	0.004	0.019	0.023	n/a	n/a	n/a
	W007	050100010103	PSS	1.78	1.79	n/a	-	0.002	-	0.002	0.000	0.009	n/a
	W008	050100010103	PEM	2.06	2.08	n/a	-	0.025	0.017	0.042	n/a	n/a	n/a
	W030	050100010309	PEM	2.15	2.16	25	-	0.011	0.028	0.039	n/a	n/a	n/a
	W014	050100010102	PEM	2.52	2.59	234	-	0.173	0.253	0.426	n/a	n/a	n/a
	W011a	050100010103	PEM	4.35	4.37	n/a	-	-	-	0.000	n/a	n/a	n/a
	W016	050100010103	PFO	5.40	5.43	59	0.022	0.059	0.086	0.167	n/a	n/a	n/a
	W017	050100010103	PFO	5.46	5.49	107	-	0.053	0.122	0.175	n/a	n/a	n/a
	W137a	050100010103	PEM	5.99	6	n/a	-	0.022	0.001	0.023	n/a	n/a	n/a
	W138a	050100010103	PEM	6.01	6.02	n/a	-	0.013	-	0.013	n/a	n/a	n/a
	W141a	050100010103	PEM	6.63	6.67	2	-	0.046	0.020	0.066	n/a	n/a	n/a
	W143a	050100010103	PEM	6.70	6.75	n/a	-	-	0.018	0.018	0.016	n/a	n/a
	W156a	050100010103	PSS	6.99	7.06	74	0.428	0.024	0.087	0.539	n/a	n/a	n/a
	W215a	050100010103	PEM	7.06	7.08	66	-	0.022	0.077	0.099	n/a	n/a	n/a

TABLE E-2

Wetland Impacts for the Northern Access 2016 Project

Facility/ State/ County	Wetland ID Number	12-Digit Hydrologic Unit Code	Cover Class[b]	Milepost		Centerline Crossing Length (feet)	Acreage Within Additional Temporary Workspace	Acreage Within 25-ft-wide Temporary ROW	Acreage Within 50-ft-wide Permanent ROW [c]	Total Wetland Impacts (acres)[d]	Permanent Conversion of Vegetation to PEM (acres)[e]	Conversion or Selective PSS Maintenance (acres)[e]	Perman ent Fill
				From	To								
	W023	050100010103	PEM	9.02	9.04	n/a	-	0.037	0.009	0.046	n/a	n/a	n/a
	W227a	050100010103	PEM	9.44	9.46	n/a	-	0.034	0.011	0.045	0.229	n/a	n/a
	W226a	050100010103	PSS	9.47	9.55	33	-	0.025	0.034	0.059	n/a	n/a	n/a
	W225a	050100010103	PEM	9.53	9.55	56	-	0.004	0.055	0.059	n/a	n/a	n/a
	W154a	050100010104	PEM	11.25	11.26	20	0.043	0.017	0.027	0.087	0.056	0.443	n/a
	W75a	050100010105	PEM	12.04	12.18	609	-	0.19	0.692	0.882	0.213	0.395	n/a
	W211a	050100010105	PFO	12.45	12.46	20	-	-	0.019	0.019	n/a	n/a	n/a
	W79a	050100010105	PEM	12.62	12.64	144	0.058	0.08	0.166	0.304	n/a	n/a	n/a
	W79a	050100010105	PSS	12.64	12.68	223	0.056	0.146	0.257	0.459	0.079	n/a	n/a
	W212a	050100010105	PEM	12.66	12.67	43	-	-	0.017	0.017	n/a	n/a	n/a
	W79a	050100010105	PFO	12.68	12.7	82	0.114	0.049	0.094	0.257	0.106	0.224	n/a
	W84a	050100010105	PEM	12.75	12.78	55	-	0.051	0.07	0.121	n/a	n/a	n/a
	W151a	050100010105	PEM	13.18	13.25	255	-	0.085	0.278	0.363	0.033	0.065	n/a
	W150a	050100010105	PEM	13.30	13.32	n/a	-	0.015	-	0.015	n/a	n/a	n/a
	W149a	050100010105	PEM	13.33	13.34	10	0.034	0.001	0.012	0.047	n/a	n/a	n/a
	W157a	050100010105	PEM	13.99	14.02	100	-	0.064	0.123	0.187	n/a	n/a	n/a
	W029	050100010105	PEM	15.31	15.32	3	0.003	0.002	0.004	0.009	n/a	n/a	n/a
	W40a	050100010105	PEM	15.7	15.71	n/a	-	0.003	-	0.003	0.046	n/a	n/a
	W44a	050100010309	PEM	17.32	17.33	n/a	-	0.003	-	0.003	0.017	n/a	n/a
	W45a	050100010309	PEM	17.63	17.73	99	0.032	0.001	0.166	0.199	0.019	n/a	n/a
	W49a	050100010309	PFO	18.4	18.44	189	-	0.029	0.217	0.246	n/a	n/a	n/a
	W51a	050100010309	PSS	18.45	18.46	56	-	0.006	0.054	0.060	n/a	n/a	n/a

TABLE E-2

Wetland Impacts for the Northern Access 2016 Project

Facility/ State/ County	Wetland ID Number	12-Digit Hydrologic Unit Code	Cover Class[b]	Milepost		Centerline Crossing Length (feet)	Acreage Within Additional Temporary Workspace	Acreage Within 25-ft-wide Temporary ROW	Acreage Within 50-ft-wide Permanent ROW [c]	Total Wetland Impacts (acres)[d]	Permanent Conversion of Vegetation to PEM (acres)[e]	Conversion or Selective PSS Maintenance (acres)[e]	Perman ent Fill
				From	To								
	W4c	050100010309	PEM	19.37	19.38	71	-	0.001	0.075	0.076	n/a	n/a	n/a
	W2c	050100010309	PEM	19.47	19.48	n/a	-	-	0.006	0.006	n/a	n/a	n/a
	W6c	050100010309	PEM	20.15	20.17	n/a	-	0.037	0.006	0.043	n/a	n/a	n/a
	W206a	050100010309	PEM	20.80	20.82	37	-	0.018	0.042	0.060	n/a	n/a	n/a
	W207a	050100010309	PEM	20.83	20.84	28	-	0.016	0.030	0.046	n/a	n/a	n/a
	W208a	050100010309	PSS	20.93	20.97	114	-	0.071	0.147	0.218	n/a	n/a	n/a
	W209a	050100010309	PSS	21.10	21.12	63	-	0.042	0.067	0.109	n/a	n/a	n/a
	W210a	050100010309	PSS	21.30	21.34	192	-	0.104	0.216	0.320	n/a	n/a	n/a
	W82a	050100010309	PEM	21.81	21.82	3	0.153	0.03	0.016	0.199	n/a	n/a	n/a
	W031	050100010309	PFO	23.00	23.01	22	0.028	0.42	0.022	0.470	0.137	0.275	n/a
	W54a	050100010309	PEM	23.93	23.95	n/a	-	-	0.027	0.027	n/a	n/a	n/a
	W55a	050100010309	PEM	23.96	24.07	113	-	0.074	0.133	0.207	n/a	n/a	n/a
	W217a	050100010309	PSS	24.79	24.80	n/a	-	0.001	-	0.001	n/a	n/a	n/a
	W216a	050100010309	PSS	24.83	24.86	111	-	0.065	0.127	0.192	n/a	n/a	n/a
	W218a	050100010309	PSS	24.89	24.90	n/a	0.006	-	-	0.006	n/a	n/a	n/a
	W219a	050100010309	PSS	24.89	24.91	7	-	-	0.028	0.028	n/a	n/a	n/a
	W10c	050100010311	PSS	25.76	25.79	128	-	0.085	0.142	0.227	n/a	n/a	n/a
	W10c	050100010311	PEM	25.77	25.78	n/a	0.034	0.010	-	0.044	n/a	n/a	n/a
	W033/034	050100010207	PSS	27.34	27.49	758	0.035	0.038	0.868	0.941	n/a	n/a	n/a
	W155a	050100010207	PFO	27.52	27.60	71	0.008	0.069	0.083	0.16	n/a	n/a	n/a
	W214a	050100010103	PEM	81.05	81.06	n/a	-	-	0.006	0.006	n/a	n/a	n/a

TABLE E-2

Wetland Impacts for the Northern Access 2016 Project

Facility/ State/ County	Wetland ID Number	12-Digit Hydrologic Unit Code	Cover Class[b]	Milepost From	Milepost To	Centerline Crossing Length (feet)	Acreage Within Additional Temporary Workspace	Acreage Within 25-ft-wide Temporary ROW	Acreage Within 50-ft-wide Permanent ROW [c]	Total Wetland Impacts (acres)[d]	Permanent Conversion of Vegetation to PEM (acres)[e]	Conversion or Selective PSS Maintenance (acres)[e]	Permanent Fill
New York													
Allegany													
	W159a	050100010207	PFO	27.62	27.91	1508	-	0.855	1.685	2.54	0.034	0.069	n/a
	W213a	050100010207	PSS	27.96	28.05	492	-	0.353	0.569	0.922	n/a	n/a	n/a
	W106a	050100010207	PSS	28.14	28.16	84	0.09	0.052	0.096	0.238	0.066	0.106	n/a
	W107a	050100010207	PEM	28.19	28.2	17	-		0.017	0.017	0.103	n/a	n/a
	W220a	050100010501	PEM	30.76	30.78	99	0.02	0.052	0.115	0.187	n/a	n/a	n/a
	W221a	050100010501	PEM	30.78	30.79	28	-		0.032	0.032	n/a	n/a	n/a
	W222a	050100010501	PEM	30.80	30.82	58	0.045	0.001	0.055	0.101	n/a	n/a	n/a
	W093	050100010501	PEM	30.90	30.99	189	-	0.126	0.221	0.347	n/a	n/a	n/a
	W162a	050100010501	PEM	31.12	31.14	n/a	-	0.039	0.011	0.05	n/a	n/a	n/a
	W161a	050100010501	PEM	31.17	31.18	37	-	0.006	0.041	0.047	n/a	n/a	n/a
	W160a	050100010501	PEM	31.21	31.22	n/a	0.8	0.006	-	0.806	0.014	0.036	n/a
	W095	050100010501	PEM	31.59	31.65	262	-	0.176	0.334	0.51	0.024	0.049	n/a
	W4a	050100010501	PSS	31.71	31.76	158	-	0.108	0.181	0.289	n/a	n/a	n/a
	W096	050100010501	PEM	32.00	32.01	n/a	0.004	-	-	0.004	n/a	n/a	n/a
	W045	050100010501	PEM	34.27	34.28	17	-	0.008	0.020	0.028	n/a	n/a	n/a
	W3a	050100010501	PEM	32.18	32.18	19	-	0.004	0.014	0.018	n/a	n/a	n/a
	W042	050100010501	PEM	34.70	34.72	53	-	0.049	0.045	0.094	n/a	n/a	n/a
	W041	050100010501	PEM	34.78	34.79	28	-	-	0.029	0.029	0.017	n/a	n/a
	W040	050100010501	PEM	34.81	34.82	38	-	-	0.043	0.043	n/a	n/a	n/a
	W54b	050100010501	PFO	35.08	35.11	27	-	0.054	0.033	0.087	n/a	n/a	n/a

TABLE E-2

Wetland Impacts for the Northern Access 2016 Project

Facility/ State/ County	Wetland ID Number	12-Digit Hydrologic Unit Code	Cover Class[b]	Milepost		Centerline Crossing Length (feet)	Acreage Within Additional Temporary Workspace	Acreage Within 25-ft-wide Temporary ROW	Acreage Within 50-ft-wide Permanent ROW [c]	Total Wetland Impacts (acres)[d]	Permanent Conversion of Vegetation to PEM (acres)[e]	Conversion or Selective PSS Maintenance (acres)[e]	Perman ent Fill
				From	To								
	W53b	050100010501	PEM	35.96	35.99	120	-	0.010	0.136	0.146	n/a	n/a	n/a
	W52b	050100010501	PEM	36.07	36.12	201	-	0.055	0.182	0.237	0.008	n/a	n/a
Cattaraugus													
	W309a	050100010501	PEM	33.32	33.33	37	-	0.022	0.043	0.065	n/a	n/a	n/a
	W308a	050100010501	PEM	33.34	33.38	271	-	0.164	0.307	0.471	0.005	0.008	0
	W310a	050100010501	PEM	33.92	33.93	68	0.027	0.024	0.077	0.128	n/a	n/a	n/a
	W311a	050100010501	PSS	34.15	34.17	86	0.018	0.034	0.097	0.149	0.051	n/a	n/a
	W51b	050100010502	PEM	37.59	37.64	213	-	0.126	0.245	0.371	n/a	n/a	n/a
	W50b	050100010502	PEM	37.67	37.69	41	0.017	0.028	0.059	0.104	0.019	0.038	n/a
	W49b	050100010502	PEM	37.74	37.76	61	-	-	0.047	0.047	n/a	n/a	n/a
	W48b	050100010502	PEM	38.32	38.33	37	-	0.019	0.047	0.066	n/a	n/a	n/a
	W163a	050100010502	PEM	40.91	40.99	100	-	0.001	0.190	0.191	n/a	n/a	n/a
	W164a	050100010502	PEM	41.02	41.04	n/a	-	-	0.000	0	n/a	n/a	n/a
	W165a	050100010502	PFO	41.05	41.08	33	-	0.01	0.050	0.06	n/a	n/a	n/a
	W256a	050100010407	PEM	41.51	41.53	63	0.089	0.015	0.074	0.178	n/a	n/a	n/a
	W257a	050100010407	PEM	41.54	41.56	n/a	-	-	0.041	0.041	n/a	n/a	n/a
	W048	050100010406	PEM	41.87	41.93	n/a	-	-	0.147	0.147	n/a	n/a	n/a
	W049	050100010406	PEM	41.99	42.02	13	-	-	0.071	0.071	n/a	n/a	n/a
	W050	050100010406	PEM	42.52	42.57	275	-	0.101	0.269	0.37	0.043	0.087	0
	W052	050100010406	PSS	42.73	42.76	44	-	0.049	0.063	0.112	0.013	n/a	n/a
	W258a	050100010404	PEM	43.49	43.54	80	-	0.069	0.082	0.151	n/a	n/a	n/a
	W223a	050100010404	PEM	43.67	43.68	n/a	-	0.005	-	0.005	n/a	n/a	n/a

TABLE E-2

Wetland Impacts for the Northern Access 2016 Project

Facility/ State/ County	Wetland ID Number	12-Digit Hydrologic Unit Code	Cover Class[b]	Milepost		Centerline Crossing Length (feet)	Acreage Within Additional Temporary Workspace	Acreage Within 25-ft-wide Temporary ROW	Acreage Within 50-ft-wide Permanent ROW [c]	Total Wetland Impacts (acres)[d]	Permanent Conversion of Vegetation to PEM (acres)[e]	Conversion or Selective PSS Maintenance (acres)[e]	Perman ent Fill
				From	To								
	W123a	050100010404	PEM	43.83	43.85	n/a	-	0.033	0.001	0.038	n/a	n/a	n/a
	W070	050100010404	PEM	43.87	43.89	n/a	-	-	0.028	0.028	n/a	n/a	n/a
	W067	050100010404	PEM	43.94	43.95	n/a	-	0.032	0.014	0.046	n/a	n/a	n/a
	W066	050100010404	PEM	44.03	44.06	n/a	-	0.052	-	0.052	0.026	n/a	n/a
	W065	050100010404	PEM	44.11	44.12	n/a	-	0.006	0.000	0.006	0.014	n/a	n/a
	W064	050100010404	PEM	44.16	44.18	24	-	0.014	0.03	0.044	0.044	n/a	n/a
	W063	050100010404	PEM	44.26	44.28	26	-	-	0.037	0.037	n/a	n/a	n/a
	W062	050100010407	PEM	44.59	44.61	n/a	-	0.021	0.003	0.024	0.005	0.01	0
	W060	050100010407	PSS	44.82	44.83	n/a	-	0.009	-	0.009	n/a	n/a	n/a
	W060	050100010407	PEM	44.83	44.84	78	-	0.060	0.087	0.147	n/a	n/a	n/a
	W2d	050100010407	PEM	45.05	45.20	734	0.103	0.257	0.797	1.157	n/a	n/a	n/a
	W2d	050100010407	PSS	45.09	45.12	n/a	-	0.007	-	0.007	0.026	n/a	n/a
	W2d	050100010407	PFO	45.13	45.18	n/a	0.089	0.086	0.017	0.192	n/a	n/a	n/a
	W238a	050100010407	PEM	45.31	45.33	n/a	-	0.014	0.000	0.014	0.002	n/a	n/a
	W237a	050100010407	PEM	45.48	45.49	n/a	-	0.000	-	0.000	0.029	n/a	n/a
	W6d	050100010407	PEM	45.71	45.73	n/a	-	-	0.016	0.016	n/a	n/a	n/a
	W4d	050100010503	PFO	46.07	46.10	5	-	0.126	0.072	0.198	0.174	n/a	n/a
	W4d	050100010503	PEM	46.07	46.18	649	-	0.062	0.551	0.613	0.016	0.033	0
	W4d	050100010503	PFO	46.13	46.18	5	0.085	0.180	0.133	0.398	n/a	n/a	n/a
	W3d	050100010503	PEM	46.28	46.34	167	-	0.083	0.180	0.263	0.346	0.692	0
	W055	050100010503	PEM	46.45	46.53	374	-	0.179	0.440	0.619	0.113	n/a	n/a
	W235a	050100010503	PEM	46.82	46.84	60	-	-	0.051	0.051	0.019	n/a	n/a

TABLE E-2

Wetland Impacts for the Northern Access 2016 Project

Facility/ State/ County	Wetland ID Number	12-Digit Hydrologic Unit Code	Cover Class[b]	Milepost		Centerline Crossing Length (feet)	Acreage Within Additional Temporary Workspace	Acreage Within 25-ft-wide Temporary ROW	Acreage Within 50-ft-wide Permanent ROW [c]	Total Wetland Impacts (acres)[d]	Permanent Conversion of Vegetation to PEM (acres)[e]	Conversion or Selective PSS Maintenance (acres)[e]	Perman ent Fill
				From	To								
	W234a	050100010503	PEM	46.84	46.85	n/a	-	-	0.020	0.020	n/a	n/a	n/a
	W092	050100010503	PEM	47.05	47.06	n/a	-	-	0.008	0.008	n/a	n/a	n/a
	W233a	050100010503	PEM	47.88	47.97	84	-	-	0.173	0.173	n/a	n/a	n/a
	W7d	050100010503	PEM	48.06	48.08	22	-	-	0.040	0.040	n/a	n/a	n/a
	W076	050100010503	PEM	48.13	48.16	115	-	0.088	0.136	0.224	n/a	n/a	n/a
	W074	050100010503	PEM	48.63	48.65	n/a	-	-	0.035	0.035	n/a	n/a	n/a
	W073	050100010704	PEM	48.8	48.81	28	-	0.000	0.043	0.043	n/a	n/a	n/a
	W073	050100010503	PFO	48.8	48.8	n/a	-	0.005	0.001	0.006	n/a	n/a	n/a
	W072	050100010704	PEM	48.87	48.94	n/a	-	-	0.078	0.078	n/a	n/a	n/a
	W085	050100010404	PEM	49.36	49.43	132	-	0.008	0.210	0.218	0.036	n/a	n/a
	W086	050100010404	PFO	49.68	49.74	168	-	0.029	0.207	0.236	n/a	n/a	n/a
	W087	050100010704	PEM	49.87	49.89	n/a	-	-	0.051	0.051	n/a	n/a	n/a
	W089	050100010704	PEM	50.07	50.18	349	-	0.176	0.497	0.673	n/a	n/a	n/a
	W079	050100010404	PEM	50.22	50.37	581	-	0.197	0.700	0.897	n/a	n/a	n/a
	W079	050100010704	PFO	50.34	50.37	63	0.128	0.059	0.058	0.245	0.02	n/a	n/a
	W081	050100010404	PFO	50.47	50.56	89	0.001	0.042	0.127	0.170	n/a	n/a	n/a
	W081	050100010404	PEM	50.47	50.56	n/a	-	-	0.056	0.056	n/a	n/a	n/a
	W082	050100010404	PEM	50.57	50.6	n/a	-	-	0.056	0.056	n/a	n/a	n/a
	W083/084	050100010404	PEM	50.71	50.84	257	-	-	0.485	0.485	n/a	n/a	n/a
	W083/084	050100010404	PFO	50.77	50.79	114	-	0.018	0.050	0.068	0.006	0.012	n/a
	W083/084	050100010404	PFO	50.82	50.84	n/a	-	0.052	0.025	0.077	n/a	n/a	n/a
	W090	050100010704	PEM	51.17	51.19	98	-	0.05	0.113	0.163	n/a	n/a	n/a

TABLE E-2

Wetland Impacts for the Northern Access 2016 Project

Facility/ State/ County	Wetland ID Number	12-Digit Hydrologic Unit Code	Cover Class[b]	Milepost		Centerline Crossing Length (feet)	Acreage Within Additional Temporary Workspace	Acreage Within 25-ft-wide Temporary ROW	Acreage Within 50-ft-wide Permanent ROW [c]	Total Wetland Impacts (acres)[d]	Permanent Conversion of Vegetation to PEM (acres)[e]	Conversion or Selective PSS Maintenance (acres)[e]	Perman ent Fill
				From	To								
	W091	050100010704	PEM	51.23	51.25	26	-	0.01	0.032	0.042	n/a	n/a	n/a
	W66a	050100010404	PEM	51.62	51.63	48	-	0.002	0.053	0.055	n/a	n/a	n/a
	W67a	050100010404	PEM	51.82	51.86	65	-	0.01	0.099	0.109	n/a	n/a	n/a
	W68a	050100010404	PEM	52.58	55.59	20	-	0.007	0.023	0.030	n/a	n/a	n/a
	W71a	050100010404	PEM	52.68	52.69	25	-	0.017	0.029	0.046	n/a	n/a	n/a
	W72a	050100010404	PEM	52.71	52.72	n/a	-	-	0.027	0.027	n/a	n/a	n/a
	W097	050100010404	PEM	53.03	53.04	n/a	-	-	0.009	0.009	0.008	0.016	n/a
	W098	050100010404	PEM	53.04	53.05	n/a	0.2	0.017	0.006	0.223	n/a	n/a	n/a
	W100	050100010404	PEM	53.19	53.21	n/a	-	-	0.004	0.004	n/a	n/a	n/a
	W232a	050100010404	PEM	53.59	53.61	n/a	-	-	0.032	0.032	n/a	n/a	n/a
	W61a	050100010404	PEM	55.18	55.19	n/a	-	-	0.003	0.003	n/a	n/a	n/a
	W169a	050100010404	PEM	55.39	55.40	26	-	0.019	0.034	0.053	n/a	n/a	n/a
	W168a	050100010404	PEM	55.42	55.45	126	-	0.058	0.116	0.174	0.01	n/a	n/a
	W167a	050100010404	PSS	55.48	55.54	117	0.002	0.000	0.178	0.18	n/a	n/a	n/a
	W85a	050100010404	PEM	55.89	55.96	69	0.081	0.090	0.099	0.27	n/a	n/a	n/a
	W86a	050100010402	PEM	56.16	56.25	79	-	0.043	0.161	0.204	n/a	n/a	n/a
	W88a	050100010402	PEM	56.37	56.41	n/a	-	-	0.004	0.004	n/a	n/a	n/a
	W89a	050100010402	PEM	56.49	56.5	n/a	-	0.002	-	0.002	n/a	n/a	n/a
	W26a	050100010402	PEM	56.61	56.74	694	-	0.411	0.795	1.206	n/a	n/a	n/a
	W28a	050100010402	PEM	56.96	56.98	n/a	-	-	0.020	0.02	n/a	n/a	n/a
	W296a	050100010402	PEM	57.12	57.15	239	-	0.003	0.201	0.204	n/a	n/a	n/a
	W295a	050100010402	PEM	57.23	57.24	25	-	0.012	0.029	0.041	n/a	n/a	n/a

TABLE E-2

Wetland Impacts for the Northern Access 2016 Project

Facility/ State/ County	Wetland ID Number	12-Digit Hydrologic Unit Code	Cover Class[b]	Milepost		Centerline Crossing Length (feet)	Acreage Within Additional Temporary Workspace	Acreage Within 25-ft-wide Temporary ROW	Acreage Within 50-ft-wide Permanent ROW [c]	Total Wetland Impacts (acres)[d]	Permanent Conversion of Vegetation to PEM (acres)[e]	Conversion or Selective PSS Maintenance (acres)[e]	Perman ent Fill
				From	To								
	W291a	050100010402	PEM	57.56	57.63	n/a	-	-	0.063	0.063	n/a	n/a	n/a
	W292a	050100010402	PSS	57.95	57.96	33	-	0.003	0.045	0.048	n/a	n/a	n/a
	W293a	050100010402	PEM	57.97	57.98	10	-	-	0.01	0.01	n/a	n/a	n/a
	W265a	050100010401	PEM	58.89	58.92	190	-	0.024	0.194	0.218	n/a	n/a	n/a
	W30b	050100010401	PEM	59.69	59.87	665	-	0.415	0.764	1.179	n/a	n/a	n/a
	W21a	050100010401	PEM	60.05	60.07	31	0.073	0.000	0.032	0.105	0.000	0.004	n/a
	W22a	050100010401	PEM	60.18	60.19	57	-	0.027	0.066	0.093	n/a	n/a	n/a
	W23a	050100010401	PEM	60.22	60.23	33	-	-	0.039	0.039	n/a	n/a	n/a
	W23a	050100010401	PSS	60.22	60.23	19	-	0.019	0.021	0.04	n/a	n/a	n/a
	W25a	050100010401	PSS	60.28	60.34	354	-	0.211	0.407	0.618	0.003	0.027	n/a
	W6a	050100010401	PEM	60.97	60.99	36	-	0.012	0.044	0.056	n/a	n/a	n/a
	W9a	050100010401	PEM	61.13	61.14	n/a	-	-	0.009	0.009	0.012	0.055	n/a
	W166a	050100010704	PEM	61.13	61.16	100	-	0.038	0.119	0.157	n/a	n/a	n/a
	W10a	050100010401	PEM	61.14	61.15	16	-	-	0.019	0.019	n/a	n/a	n/a
	W11a	050100010401	PEM	61.18	61.19	8	0.006	0.013	0.007	0.026	n/a	n/a	n/a
	W12a	050100010401	PEM	61.19	61.21	59	-	-	0.031	0.031	n/a	n/a	n/a
	W13a	050100010401	PEM	61.4	61.41	n/a	-	0.016	-	0.016	n/a	n/a	n/a
	W15a	050100010401	PEM	61.45	61.48	22	-	0.039	0.049	0.088	n/a	n/a	n/a
	W16a	050100010401	PEM	61.48	61.49	8	-		0.010	0.010	n/a	n/a	n/a
	W17a	050100010401	PEM	61.51	61.51	n/a	-	0.003	0.000	0.003	n/a	n/a	n/a
	W18a	050100010401	PEM	61.74	61.76	43	-	0.041	0.054	0.095	n/a	n/a	n/a
	W19a	050100010401	PEM	61.86	61.93	125	0.022	0.043	0.181	0.246	n/a	n/a	n/a

TABLE E-2

Wetland Impacts for the Northern Access 2016 Project

Facility/ State/ County	Wetland ID Number	12-Digit Hydrologic Unit Code	Cover Class[b]	Milepost		Centerline Crossing Length (feet)	Acreage Within Additional Temporary Workspace	Acreage Within 25-ft-wide Temporary ROW	Acreage Within 50-ft-wide Permanent ROW [c]	Total Wetland Impacts (acres)[d]	Permanent Conversion of Vegetation to PEM (acres)[e]	Conversion or Selective PSS Maintenance (acres)[e]	Perman ent Fill
				From	To								
	W58a	050100010401	PSS	61.94	61.95	23	-		0.022	0.022	n/a	n/a	n/a
	W57a*	050100010401	PEM	62.34	62.35	56	-	0.034	0.064	0.098	n/a	n/a	n/a
	W56a*	050100010401	PEM	62.36	62.45	508	0.028	0.306	0.585	0.919	n/a	n/a	n/a
	W29a	050100010401	PEM	62.85	62.93	13	-	0.059	0.022	0.081	0.039	0.086	n/a
	W30a	050100010401	PEM	62.95	62.96	n/a	-		0.011	0.011	n/a	n/a	n/a
	W31a	050100010401	PEM	63.24	63.25	40	0.078	0.019	0.046	0.143	n/a	n/a	n/a
	W34a	050100010401	PEM	63.69	63.7	n/a	-		0.023	0.023	n/a	n/a	n/a
	W35a	050100010401	PEM	63.71	63.72	23	-	0.001	0.047	0.048	0.014	0.022	n/a
	W36a	050100010401	PEM	63.85	63.87	95	-	0.045	0.106	0.151	0.02	0.08	n/a
	W37a	050100010401	PEM	63.91	63.92	43	-	0.007	0.046	0.053	n/a	n/a	n/a
	W204a	041201020104	PEM	65.45	65.49	64	0.02	0.017	0.114	0.151	n/a	n/a	n/a
	W203a	041201020104	PEM	65.52	65.57	61	0.158	0.043	0.066	0.267	n/a	n/a	n/a
	W203a	041201020104	PFO	65.54	65.60	45	-	0.052	0.072	0.124	0.024	0.014	n/a
	W198a	041201020104	PFO	65.66	65.69	n/a	-	0.007	-	0.007	n/a	0.004	n/a
	W197a	041201020104	PEM	65.69	65.70	n/a	-	-	0.014	0.014	n/a	n/a	n/a
	W196a	041201020104	PEM	65.72	65.73	n/a	-	-	0.006	0.006	n/a	n/a	n/a
	W195a	041201020104	PEM	65.87	65.88	n/a	-	-	0.009	0.009	n/a	n/a	n/a
	W44b	041201020104	PEM	66.67	66.74	173	-	-	0.134	0.134	n/a	n/a	n/a
	W172a	041201020104	PEM	66.73	66.75	n/a	-	0.030	0.003	0.033	n/a	n/a	n/a
	W43b	041201020104	PFO	67.27	67.29	69	-	0.051	0.057	0.108	n/a	n/a	n/a
	W181a	041201020104	PFO	67.40	67.48	340	-	0.201	0.407	0.608	n/a	n/a	n/a
	W180a	041201020104	PEM	67.52	67.55	85	-	0.036	0.104	0.140	n/a	n/a	n/a

TABLE E-2

Wetland Impacts for the Northern Access 2016 Project

Facility/ State/ County	Wetland ID Number	12-Digit Hydrologic Unit Code	Cover Class[b]	Milepost		Centerline Crossing Length (feet)	Acreage Within Additional Temporary Workspace	Acreage Within 25-ft-wide Temporary ROW	Acreage Within 50-ft-wide Permanent ROW [c]	Total Wetland Impacts (acres)[d]	Permanent Conversion of Vegetation to PEM (acres)[e]	Conversion or Selective PSS Maintenance (acres)[e]	Perman ent Fill
				From	To								
	W179a	041201020104	PEM	67.66	67.68	8	-	0.025	0.020	0.045	n/a	n/a	n/a
	W177a	041201020104	PEM	67.69	67.70	n/a	-	0.000	0.008	0.008	n/a	n/a	n/a
	W176a	041201020104	PEM	67.70	67.71	n/a	-	0.009	0.005	0.014	n/a	n/a	n/a
	W175a	041201020104	PEM	67.71	67.72	n/a	-	0.023	0.011	0.034	n/a	n/a	n/a
	W174a	041201020104	PEM	67.72	67.73	n/a	-	0.002	-	0.002	n/a	n/a	n/a
	W245a	041201020104	PEM	68.13	68.16	115	-	0.064	0.132	0.196	n/a	n/a	n/a
	W55b	041201020105	PEM	69.07	69.11	82	0.126	0.09	0.126	0.342	0.026	n/a	n/a
	W56b	041201020105	PEM	69.13	69.15	96	0.016	0.047	0.104	0.167	n/a	n/a	n/a
	W57b	041201020105	PEM	69.68	69.73	146	-	0.035	0.16	0.195	n/a	n/a	n/a
	W239a	041201020105	PEM	70.39	70.40	32	0.018	0.010	0.034	0.062	n/a	n/a	n/a
Erie													
	W242a	041201020106	PEM	71.89	71.90	n/a	0.019	-	-	0.019	n/a	n/a	n/a
	W241a	041201020106	PEM	72.31	72.32	6	-	0.011	0.011	0.022	n/a	n/a	n/a
	W240a	041201020106	PEM	72.33	72.36	69	0	0.039	0.039	0.078	n/a	n/a	n/a
	W29b	041201020107	PEM	73.54	73.56	46	-	0.005	0.044	0.049	0.008	n/a	n/a
	W15b	041201030301	PFO	74.44	74.60	56	-	0.044	0.055	0.099	n/a	n/a	n/a
	W28b	041201020107	PEM	74.87	74.89	40	-	0.036	0.052	0.088	n/a	n/a	n/a
	W14b	041201030301	PEM	75.50	75.54	4	-	0.073	0.055	0.128	n/a	n/a	n/a
	W26b	041201020107	PEM	75.58	75.61	n/a	-	0.07	0.000	0.07	n/a	n/a	n/a
	W21b	041201020107	PEM	76.28	76.32	85	-	0.015	0.079	0.094	n/a	n/a	n/a
	W22b	041201020107	PEM	76.28	76.29	n/a	-	0.006	0.000	0.006	n/a	n/a	n/a
	W20b	041201020107	PEM	76.44	76.46	2	0.208	0.034	0.012	0.254	0.004	n/a	n/a

TABLE E-2

Wetland Impacts for the Northern Access 2016 Project

Facility/ State/ County	Wetland ID Number	12-Digit Hydrologic Unit Code	Cover Class[b]	Milepost		Centerline Crossing Length (feet)	Acreage Within Additional Temporary Workspace	Acreage Within 25-ft-wide Temporary ROW	Acreage Within 50-ft-wide Permanent ROW [c]	Total Wetland Impacts (acres)[d]	Permanent Conversion of Vegetation to PEM (acres)[e]	Conversion or Selective PSS Maintenance (acres)[e]	Perman ent Fill
				From	To								
	W19b	041201020107	PEM	76.66	76.68	113	0.238	0.138	0.134	0.51	0.081	n/a	n/a
	W18b	041201020107	PEM	76.69	76.73	140	-	0.016	0.16	0.176	n/a	n/a	n/a
	W17b	041201030301	PEM	77.06	77.12	303	-	0.025	0.331	0.356	n/a	n/a	n/a
	W16b	041201030301	PEM	77.15	77.17	76	-	0.043	0.087	0.13	n/a	n/a	n/a
	W13b	041201030301	PSS	78.19	78.21	47	-	0.020	0.054	0.074	n/a	n/a	n/a
	W65b	041201030301	PSS	78.74	78.76	77	-	0.062	0.087	0.149	n/a	n/a	n/a
	W64b	041201030301	PEM	78.94	78.95	48	-	0.009	0.05	0.059	n/a	n/a	n/a
	W63b	041201030301	PEM	78.96	78.98	134	-	0.058	0.155	0.213	n/a	n/a	n/a
	W62b	041201030301	PEM	79.91	79.93	119	-	0.068	0.137	0.205	n/a	n/a	n/a
	W61b	041201030301	PFO	80.04	80.06	n/a	-	0.038	0.001	0.039	n/a	n/a	n/a
	W61b	041201030301	PEM	80.04	80.05	n/a	-	0.002	0.011	0.013	n/a	n/a	n/a
	W60b	041201030301	PEM	80.06	80.07	19	-	-	0.024	0.024	n/a	n/a	n/a
	W264a	041201030301	PEM	80.12	80.29	699	0.113	0.215	0.795	1.123	n/a	n/a	n/a
	W281a	041201030302	PEM	80.41	80.64	417	0.081	0.245	0.628	0.954	0.005	n/a	n/a
	W281a	041201030302	PFO	80.41	80.47	325	-	0.109	0.251	0.36	n/a	n/a	n/a
	W282a	041201030302	PEM	80.72	80.74	179	-	0.008	0.12	0.128	-	-	n/a
	W280a	041201030302	PEM	80.76	80.77	-	0.054	-	-	0.054	-	-	n/a
	W279a	041201030302	PEM	80.85	80.92	266	-	0.225	0.303	0.528	-	-	n/a
	W41b	041201030302	PEM	81.13	81.15	100	0.462	0.055	0.114	0.631	-	-	n/a
	W42b	041201030302	PEM	81.23	81.38	836	-	0.431	0.921	1.352	-	-	n/a
	W182a	041201030302	PEM	81.51	81.53	118	-	0.07	0.137	0.207	-	-	n/a
	W183a	041201030302	PFO	81.60	81.61	0	-	0.028	0.023	0.051	0.001	0.008	n/a

TABLE E-2

Wetland Impacts for the Northern Access 2016 Project

Facility/ State/ County	Wetland ID Number	12-Digit Hydrologic Unit Code	Cover Class[b]	Milepost		Centerline Crossing Length (feet)	Acreage Within Additional Temporary Workspace	Acreage Within 25-ft-wide Temporary ROW	Acreage Within 50-ft-wide Permanent ROW [c]	Total Wetland Impacts (acres)[d]	Permanent Conversion of Vegetation to PEM (acres)[e]	Conversion or Selective PSS Maintenance (acres)[e]	Perman ent Fill
				From	To								
	W184a	041201030302	PFO	81.70	81.80	351	-	0.222	0.308	0.53	0.08	0.145	n/a
	W184a	041201030302	PEM	81.70	81.73	-	-	-	0.054	0.054	-	-	n/a
	W184a	041201030302	PEM	81.75	81.80	-	-	-	0.044	0.044	-	-	n/a
	W185a	041201030302	PEM	81.84	82.12	561	-	-	0.679	0.679	-	-	n/a
	W185a	041201030302	PFO	81.90	81.91	64	-	0.07	0.069	0.139	0.014	0.027	n/a
	W185a	041201030302	PFO	81.93	81.99	187	-	0.123	0.13	0.253	0.032	0.049	n/a
	W185a	041201030302	PFO	82.02	82.06	-	-	0.191	0.177	0.368	0.015	0.081	n/a
	W185a	041201030302	PFO	82.09	82.11	25	-	0.031	0.033	0.064	0.006	0.014	n/a
	W186a	041201030302	PEM	82.30	82.34	35	-	0.011	0.076	0.087	-	-	n/a
	W187a	041201030302	PEM	82.39	82.47	270	-	-	0.234	0.234	-	-	n/a
	W187a	041201030302	PFO	82.39	82.44	-	-	0.111	0.101	0.212	0.005	0.049	n/a
	W187a	041201030302	PFO	82.44	82.47	126	-	0.092	0.107	0.199	0.028	0.041	n/a
	W188a	041201030302	PFO	82.54	82.56	98	-	0.048	0.09	0.138	0.022	0.045	n/a
	W188a	041201030302	PEM	82.54	82.56	-	-	-	0.023	0.023	-	-	n/a
	W189a	041201030302	PEM	82.62	82.65	17	-	0.011	0.048	0.059	-	-	n/a
	W190a	041201030302	PEM	82.67	82.69	-	-	-	0.009	0.009	-	-	n/a
	W191a	041201030302	PEM	82.93	82.99	45	-	0.127	0.077	0.204	-	-	n/a
	W192a	041201030302	PFO	82.99	83.17	66	-	0.29	0.165	0.455	0.017	0.057	n/a
	W192a	041201030302	PSS	83.09	83.17	428	0.091	0.001	0.4	0.492	0.097	-	n/a
	W12b	041201030302	PEM	83.18	83.29	193	-	0.196	0.273	0.469	-	-	n/a
	W12b	041201030302	PSS	83.18	83.20	83	-	0.025	0.05	0.075	0.018	-	n/a
	W12b	041201030302	PSS	83.22	83.25	144	-	0	0.13	0.13	0.033	-	n/a

TABLE E-2

Wetland Impacts for the Northern Access 2016 Project

Facility/ State/ County	Wetland ID Number	12-Digit Hydrologic Unit Code	Cover Class[b]	Milepost		Centerline Crossing Length (feet)	Acreage Within Additional Temporary Workspace	Acreage Within 25-ft-wide Temporary ROW	Acreage Within 50-ft-wide Permanent ROW [c]	Total Wetland Impacts (acres)[d]	Permanent Conversion of Vegetation to PEM (acres)[e]	Conversion or Selective PSS Maintenance (acres)[e]	Perman ent Fill
				From	To								
	W12b	041201030302	PFO	83.22	83.24	-	-	0.047	0.028	0.075	0	0.007	n/a
	W12b	041201030302	PSS	83.25	83.26	-	0.002	0.01	0	0.012	-	-	n/a
	W11b	041201030302	PEM	83.37	83.45	228	-	0.134	0.259	0.393	-	-	n/a
	W11b	041201030302	PSS	83.44	83.45	-	-	0.026	0.004	0.03	-	-	n/a
	W10b	041201030302	PEM	83.48	83.50	-	-	-	0.01	0.01	-	-	n/a
	W9b	041201030302	PEM	83.74	83.77	132	-	-	0.128	0.128	-	-	n/a
	W9b	041201030302	PFO	83.77	83.83	-	-	0.102	0.071	0.173	-	0.027	n/a
	W9b	041201030302	PEM	83.79	83.83	137	-	-	0.093	0.093	-	-	n/a
	W8b	041201030302	PEM	84.15	84.17	-	-	0.056	0.048	0.104	-	-	n/a
	W7b	041201030302	PEM	84.22	84.23	-	-	0.001	-	0.001	-	-	n/a
	W6b	041201030302	PEM	84.24	84.25	53	-	-	0.04	0.04	-	-	n/a
	W4b/W5b	041201030302	PEM	84.29	84.66	933	-	0.148	1.066	1.214	-	-	n/a
	W4b/W5b	041201030302	PFO	84.45	84.54	89	-	0.192	0.11	0.302	0.02	0.039	n/a
	W4b/W5b	041201030302	PFO	84.61	84.66	211	-	0.13	0.23	0.36	0.049	0.095	n/a
	W297a	041201030303	PFO	84.79	84.82	79	-	0.063	0.095	0.158	0.018	0.037	n/a
	W3b	041201030304	PEM	84.92	84.95	137	-	-	0.094	0.094	-	-	n/a
	W3b	041201030304	PFO	84.93	84.95	-	-	0.078	0.07	0.148	0.008	0.031	n/a
	W2b	041201030303	PEM	85.00	85.07	42	-	0.001	0.15	0.151	-	-	n/a
	W2b	041201030303	PFO	85.03	85.07	254	-	0.153	0.193	0.346	0.058	0.075	n/a
	W1b	041201030303	PEM	85.18	85.27	388	-	0.174	0.408	0.582	-	-	n/a
	W29c	041201030304	PEM	85.60	85.68	398	-	0.241	0.437	0.678	-	-	n/a
	W26c	041201030304	PFO	85.79	85.94	705	-	0.386	0.79	1.176	0.162	0.318	n/a

TABLE E-2

Wetland Impacts for the Northern Access 2016 Project

Facility/ State/ County	Wetland ID Number	12-Digit Hydrologic Unit Code	Cover Class[b]	Milepost		Centerline Crossing Length (feet)	Acreage Within Additional Temporary Workspace	Acreage Within 25-ft-wide Temporary ROW	Acreage Within 50-ft-wide Permanent ROW [c]	Total Wetland Impacts (acres)[d]	Permanent Conversion of Vegetation to PEM (acres)[e]	Conversion or Selective PSS Maintenance (acres)[e]	Perman ent Fill
				From	To								
	W26c	041201030304	PSS	85.93	85.98	152	-	0.175	0.208	0.383	0.035	-	n/a
	W26c	041201030304	PEM	85.95	86.21	279	0.014	0	0.28	0.294	-	-	n/a
	W27c	041201030304	PEM	86.18	86.19	-	-	0.01	-	0.01	-	-	n/a
	W26c	041201030304	PFO	86.19	86.29	272	-	0.191	0.272	0.463	0.063	0.116	n/a
	W26c	041201030304	PEM	86.24	86.25	3	-	-	0.017	0.017	-	-	n/a
	W28c	041201030304	PFO	86.38	86.54	741	-	0.435	0.839	1.274	0.17	0.337	n/a
	W248a	041201030303	PFO	86.56	86.65	370	-	0.145	0.419	0.564	0.085	0.17	n/a
	W249a	041201030303	PEM	86.83	86.97	463	-	0.253	0.588	0.841	-	-	n/a
	W250a	041201030304	PEM	86.98	87.00	22	-	0.009	0.022	0.031	-	-	n/a
	W251a	041201030304	PEM	87.03	87.05	45	-	0.004	0.061	0.065	-	-	n/a
	W193a	041201030304	PFO	87.09	87.16	397	-	0.186	0.368	0.554	0.091	0.147	n/a
	W193a	041201030304	PEM	87.10	87.22	-	-	-	0.119	0.119	-	-	n/a
	W194a	041201030304	PFO	87.31	87.33	39	-	0.036	0.061	0.097	0.009	0.023	n/a
	W2e	041201030304	PEM	87.51	87.52	14	-	-	0.018	0.018	-	-	n/a
	W3e	041201030304	PEM	87.55	87.57	86	-	0.005	0.085	0.09	-	-	n/a
	W1e	041201030304	PFO	87.62	87.64	-	-	0.027	0.017	0.044	0	0.009	n/a
	W1e	041201030304	PEM	87.63	87.64	39	-	-	0.028	0.028	-	-	n/a
	W4e	041201030304	PEM	87.65	87.70	207	-	0.123	0.232	0.355	-	-	n/a
	W247a	041201030304	PEM	87.91	87.92	-	-		0.013	0.013	-	-	n/a
	W254a	041201030304	PEM	88.06	88.09	95	0.326	0.022	0.109	0.457	-	-	n/a
	W255a	041201030304	PEM	88.13	88.18	310	-	0.105	0.326	0.431	-	-	n/a
	W253a	041201030304	PEM	88.23	88.35	640	-	0.231	0.672	0.903	-	-	n/a

TABLE E-2

Wetland Impacts for the Northern Access 2016 Project

Facility/ State/ County	Wetland ID Number	12-Digit Hydrologic Unit Code	Cover Class[b]	Milepost		Centerline Crossing Length (feet)	Acreage Within Additional Temporary Workspace	Acreage Within 25-ft-wide Temporary ROW	Acreage Within 50-ft-wide Permanent ROW [c]	Total Wetland Impacts (acres)[d]	Permanent Conversion of Vegetation to PEM (acres)[e]	Conversion or Selective PSS Maintenance (acres)[e]	Perman ent Fill
				From	To								
	W91a	041201030304	PEM	88.38	88.4	103	0.096	0.025	0.11	0.231	-	-	n/a
	W252a	041201030304	PEM	88.43	88.48	250	-	0.139	0.245	0.384	-	-	n/a
	W93a	041201030304	PEM	88.69	88.76	361	-	0.123	0.363	0.486	-	-	n/a
	W94a	041201030304	PSS	88.82	88.84	69	-	-	0.07	0.07	0.016	-	n/a
	W110a*	041201030304	PEM	89.2	89.22	237	-	0.043	0.158	0.201	-	-	n/a
	W109a	041201030304	PEM	89.45	89.48	-	-	0	-	0	-	-	n/a
	W108a	041201030304	PEM	89.47	89.48	-	0.013	-	-	0.013	-	-	n/a
	W101a	041201030304	PEM	89.59	89.65	315	-	0.17	0.358	0.528	-	-	n/a
	W100a	041201030304	PFO	90.27	90.53	995	-	0.401	1.113	1.514	0.229	-	n/a
	W99a	041201030304	PEM	90.56	90.58	90	-	0.001	0.097	0.098	-	-	n/a
	W99a	041201030304	PFO	90.56	90.58	-	-	0.031	0.001	0.032	-	-	n/a
	W98a	041201030304	PSS	90.64	90.7	247	-	-	0.205	0.205	0.056	0.443	n/a
	W97a	041201030304	PFO	90.89	91.12	1021	-	0.517	1.007	1.524	0.213	0.395	n/a
	W97a	041201030304	PEM	91.14	91.15	-	-	0.018	0.001	0.019	-	-	n/a
	W228a	041201030203	PEM	91.67	91.71	95	-	0.067	0.107	0.174	-	-	n/a
	W229a	041201030205	PSS	91.98	92.06	389	-	0.216	0.26	0.476	0.079	-	n/a
	W229a	041201030205	PEM	91.98	92.29	664	-	-	0.892	0.892	-	-	n/a
	W229a	041201030205	PFO	92.06	92.27	461	0.005	0.629	0.59	1.224	0.106	0.224	n/a
	W200a	041201030304	PEM	93.19	93.21	-	-	-	0.001	0.001	-	-	n/a
	W201a	041201030304	PFO	93.21	93.25	146	-	0.013	0.131	0.144	0.033	0.065	n/a
	W202a	041201030304	PEM	93.40	93.43	146	-	-	0.11	0.11	-	-	n/a
	W278a	041201030304	PEM	93.57	93.65	417	-	0.011	0.476	0.487	-	-	n/a

TABLE E-2

Wetland Impacts for the Northern Access 2016 Project

Facility/ State/ County	Wetland ID Number	12-Digit Hydrologic Unit Code	Cover Class[b]	Milepost From	Milepost To	Centerline Crossing Length (feet)	Acreage Within Additional Temporary Workspace	Acreage Within 25-ft-wide Temporary ROW	Acreage Within 50-ft-wide Permanent ROW [c]	Total Wetland Impacts (acres)[d]	Permanent Conversion of Vegetation to PEM (acres)[e]	Conversion or Selective PSS Maintenance (acres)[e]	Permanent Fill
	W278a	041201030304	PSS	93.60	93.65	-	-	0.137	-	0.137	-	-	n/a
	W262a	041201030304	PEM	93.68	93.69	54	-	0.016	0.062	0.078	-	-	n/a
	W261a	041201030304	PSS	93.73	93.76	201	-	0.001	0.198	0.199	0.046	-	n/a
	W260a	041201030304	PSS	93.77	93.78	74	-	0.027	0.085	0.112	0.017	-	n/a
	W259a	041201030304	PSS	93.87	93.91	81	0.003	0.092	0.103	0.198	0.019	-	n/a
	W263a	041201030205	PEM	94.06	94.08	-	-	0.006	0.001	0.007	-	-	n/a
	W35b	041201030205	PEM	94.21	94.38	940	-	0.532	1.011	1.543	-	-	n/a
	W33b	041201030205	PEM	94.55	94.57	86	-	0.074	0.099	0.173	-	-	n/a
	W32b	041201030205	PEM	94.72	94.74	3	-	0.05	0.034	0.084	-	-	n/a
	W31b	041201030205	PEM	94.79	94.84	225	-	0.134	0.259	0.393	-	-	n/a
	W267a	041201030205	PEM	95.12	95.17	206	-	0.168	0.215	0.383	-	-	n/a
	W8d	041201030205	PEM	95.20	95.21	11	-	-	0.013	0.013	-	-	n/a
	W268a	041201030205	PEM	95.28	95.37	422	-	0.192	0.485	0.677	-	-	n/a
	W269a	041201030205	PEM	95.47	95.48	64	0.02	0.036	0.05	0.106	-	-	n/a
	W270a	041201030205	PEM	95.77	95.78	15	-	-	0.018	0.018	-	-	n/a
	W271a	041201030205	PEM	96.21	96.25	211	0.038	0.107	0.241	0.386	-	-	n/a
	W272a*	041201030205	PFO	96.61	96.73	597	-	0.34	0.688	1.028	0.137	0.275	n/a
	MAINLINE PIPELINE ROW TOTALS[E]					**44,087 feet 8.35 miles**	**5.181 acres**	**22.326 acres**	**51.369 acres**	**78.884 acres**	**4.665 acres**	**6.378 acres**	**0.000 acres**

TABLE E-2

Wetland Impacts for the Northern Access 2016 Project

Facility/ State/ County	Wetland ID Number	12-Digit Hydrologic Unit Code	Cover Class[b]	Milepost From	Milepost To	Centerline Crossing Length (feet)	Acreage Within Additional Temporary Workspace	Acreage Within 25-ft-wide Temporary ROW	Acreage Within 50-ft-wide Permanent ROW [c]	Total Wetland Impacts (acres)[d]	Permanent Conversion of Vegetation to PEM (acres)[e]	Conversion or Selective PSS Maintenance (acres)[e]	Permanent Fill
ACCESS ROADS													
								Acreage Within Temporary Access Road Survey Area	**Acreage Within Permanent Access Road**				
Pennsylvania													
McKean													
	W52a	050100010309	PEM	18.46/AR 17		18.48/AR 17	n/a	0.018	-	-	0.019	n/a	n/a
	W002	050100010103	PEM	AR 1/AR 1C		AR 1/AR 1C	n/a	-	-	-	0.031	n/a	n/a
	W120a	050100010104	PEM	AR 12b		n/a	-	-	-	0.005	n/a	n/a	n/a
	W121a	050100010104	PEM	AR 12b		n/a	-	-	-	0.014	n/a	n/a	n/a
	W50a	050100010309	PEM	AR 17		n/a	-	-	-	0.005	n/a	n/a	n/a
	W114a	050100010311	PFO	AR 23		n/a	-	-	-	0.006	n/a	n/a	n/a
	W115a	050100010311	PSS	AR 23		n/a	-	-	-	0.02	n/a	n/a	n/a
	W116a	050100010311	PSS	AR 23		n/a	-	-	-	0.006	n/a	n/a	n/a
	W117a	050100010207	PSS	AR 24a		n/a	-	-	-	0.057	n/a	n/a	n/a
	W118a	050100010207	PSS	AR 24a		n/a	-	-	-	0.025	n/a	n/a	n/a
	W119a	050100010207	PSS	AR 24a		n/a	-	-	-	0.034	n/a	n/a	n/a
	W273a	050100010103	PEM	AR1C		n/a	-	-	-	0	n/a	n/a	n/a

TABLE E-2

Wetland Impacts for the Northern Access 2016 Project

Facility/ State/ County	Wetland ID Number	12-Digit Hydrologic Unit Code	Cover Class[b]	Milepost From	Milepost To	Centerline Crossing Length (feet)	Acreage Within Additional Temporary Workspace	Acreage Within 25-ft-wide Temporary ROW	Acreage Within 50-ft-wide Permanent ROW [c]	Total Wetland Impacts (acres)[d]	Permanent Conversion of Vegetation to PEM (acres)[e]	Conversion or Selective PSS Maintenance (acres)[e]	Permanent Fill
New York													
Allegany													
	W130a	050100010501	PSS	AR 27aa		n/a	-	-	-	0.010	n/a	n/a	n/a
	W131a	050100010501	PEM	AR 27aa		n/a	-	-	-	0.003	n/a	n/a	n/a
Cattaraugus													
	W135a	050100010402	PSS	AR 34		n/a	-	-	0.001	0.272	n/a	n/a	n/a
	W299a	041201020104	PEM	AR37A		n/a	0.003	-	-	0.003	n/a	n/a	n/a
	W301a	041201020104	PSS	AR37A		n/a	0.026	-	-	0.026	n/a	n/a	n/a
Erie													
	W126a	041201030304	PEM	AR 47		n/a	-	-	-	0.021	0.170	0.337	n/a
	W128a	041201030304	PEM	AR42		n/a	0	-	-	0	0.085	0.170	n/a
	W243a	041201020107	PEM	AR42		n/a	0.005	-	-	0.005	n/a	n/a	n/a
	W244a	041201020107	PEM	AR42		n/a	0.020	-	-	0.02	n/a	n/a	n/a
				ACCESS ROAD TOTALS[e]			**0.054 acres**	**0.018 acres**	**0.001 acres**	**0.532 acres**	**0.305 acres**	**0.507 acres**	**0 acres**
	W266a	050100010307	PEM	Port Alleghany Pipe Yard		n/a	0.093	-	-	0.093	n/a	n/a	n/a
	W054	050100010404	PEM	Hinsdale Interconnect		n/a	0.028	-	-	0.028	n/a	n/a	n/a
	W283a	050100010402	PEM	Buffalo Crushed Stone Contractor Yard		n/a	0.480	-	-	0.480	n/a	n/a	n/a
				ADDITIONAL AREAS TOTALS[e]			**0.601 acres**	**0 acres**	**0 acres**	**0.601 acres**	**0 acres**	**0 acres**	**0.0 acres**

TABLE E-2

Wetland Impacts for the Northern Access 2016 Project

Facility/ State/ County	Wetland ID Number	12-Digit Hydrologic Unit Code	Cover Class[b]	Milepost		Centerline Crossing Length (feet)	Acreage Within Additional Temporary Workspace	Acreage Within 25-ft-wide Temporary ROW	Acreage Within 50-ft-wide Permanent ROW [c]	Total Wetland Impacts (acres)[d]	Permanent Conversion of Vegetation to PEM (acres)[e]	Conversion or Selective PSS Maintenance (acres)[e]	Permanent Fill
				From	To								

Notes:

[a] MC = McKean County, Pennsylvania
AL = Allegany County, New York
CA = Cattaraugus County, New York
ER = Erie County, New York
NI = Niagara County, NY

[b] Cowardin classification (Cowardin et al, 1979)
PEM = Palustrine emergent
PSS = Palustrine scrub-shrub
PFO = Palustrine forested

[c] Consists of area of all wetlands within the 50-foot permanent ROW, not permanent impacts.

[d] Consists of all wetland impacts in all workspaces during construction.

[e] PFO and PSS wetland areas in the proposed permanent ROW that will not be allowed to revegetate to original vegetative cover and will be maintained as PEM. No widths are provided for these measurements as they vary based on the wetland shape.

* These wetlands will be crossed by HDD, so impacts are not equal to the areas within the ROW.

20160727-4003 FERC PDF (Unofficial) 07/27/2016

APPENDIX F

SITE-SPECIFIC PLANS FOR RESIDENCES WITHIN 25 FEET OF THE CONSTRUCTION WORKSPACE

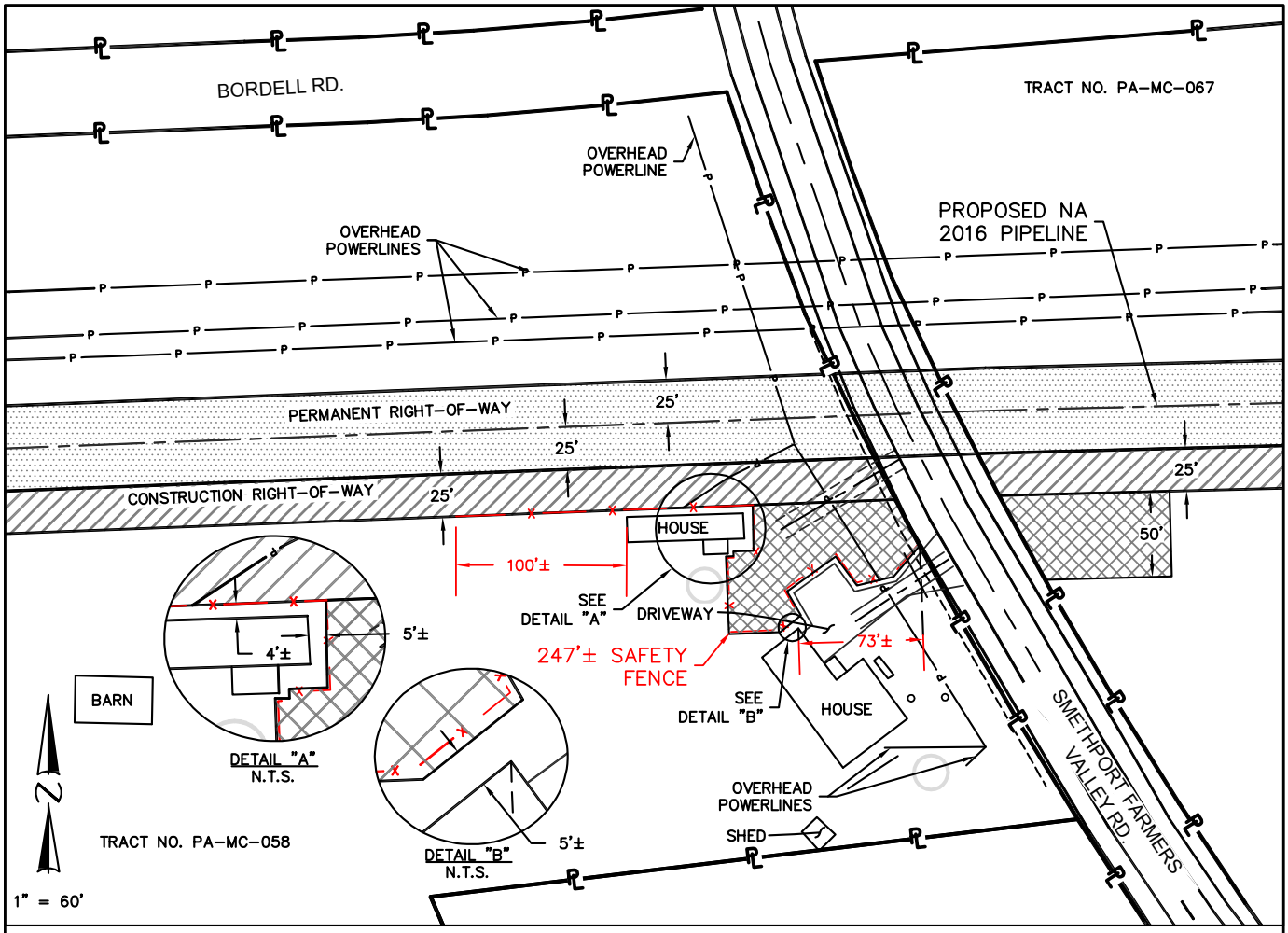

CONSTRUCTION REQUIREMENTS:

1. ALL PROPOSED CONSTRUCTION WORK AREA SHALL BE CONFINED TO THE LIMITS SHOWN ON THIS DRAWING.
2. CONTRACTOR SHALL ERECT AND MAINTAIN SAFETY FENCE AS SHOWN ON THIS DRAWING.
3. CONTRACTOR SHALL INSTALL AND MAINTAIN SEDIMENT CONTROL STRUCTURES AS REQUIRED BY APPLICABLE PERMITS AND PROTECT DOCUMENTS TO ENSURE THAT CONSTRUCTION SPOIL IS CONTAINED WITHIN THE APPROVED CONSTRUCTION WORK AREA.
4. VEHICLE ACCESS SHALL BE MAINTAINED TO THE RESIDENCES/BUSINESSES DURING THE CONSTRUCTION PERIOD.
5. TRENCH SHALL NOT BE EXCAVATED UNTIL PIPELINE IS READY FOR INSTALLATION IN THE AREA NEAR THE RESIDENCE SHOWN ON THIS DRAWING. DITCH SHALL BE EXCAVATED AND BACKFILLED IN THE SAME DAY, AND WHILE CONSTRUCTION ACTIVITIES ARE NOT IN PROGRESS.
6. OTHER EXISTING PHYSICAL FEATURES THAT NEED TO BE PROTECTED WILL BE ENCLOSED IN SAFETY FENCE TO AVOID DISTURBANCE DURING CONSTRUCTION.
7. DISTURBED ITEMS SUCH AS DRIVEWAYS, LAWNS AND LANDSCAPED AREAS SHALL BE RESTORED IMMEDIATELY AFTER FINAL GRADING (WEATHER DEPENDENT) EXCEPT FOR CONTRACTOR TRAVEL LANE.
8. CONTRACTOR SHALL COMPLY WITH ALL LOCAL NOISE ORDINANCES (IF APPLICABLE). WORK WILL ONLY BE DONE DURING DAYLIGHT HOURS.
9. CONTRACTOR SHALL TAKE APPROPRIATE MEANS TO MINIMIZE FUGITIVE DUST FROM CONSTRUCTION ACTIVITIES NEAR RESIDENCES/BUSINESSES.
10. CONTRACTOR TO NOTIFY LANDOWNER PRIOR TO PIPELINE INSTALLATION AND TO COORDINATE LANDOWNER ACCESS DURING CONSTRUCTION.

DESCRIPTION:

THIS DRAWING DOCUMENTS A RESIDENTIAL BUILDING NEAR THE PROPOSED CONSTRUCTION WORK AREA. CONTRACTOR SHALL COMPLY WITH THE FOLLOWING CONSTRUCTION MITIGATION REQUIREMENTS IN ADDITION TO THOSE LISTED IN THE CONSTRUCTION SPECIFICATIONS.

NOTES:

1. PROPERTY LINES DERIVED FROM PUBLICLY AVAILABLE DATA. BOUNDARY SURVEY WAS NOT PERFORMED TO LOCATE PROPERTY LINES.

LEGEND

- PERMANENT EASEMENT
- TEMPORARY WORKSPACE
- ADDITIONAL TEMPORARY WORKSPACE

Hatch Mott MacDonald
4200 East Skelly Drive, Suite 520
Tulsa, OK 74135
T: (918) 493-2221 ¤ F: (918) 494-3091

National Fuel

RESIDENTIAL MITIGATION MAP
NORTHERN ACCESS 2016
KEATING TOWNSHIP
MILE POST 12.02
McKEAN COUNTY, PENNSYLVANIA

SCALE:	PROJ. ID	
AS NOTED	343699	PA-MC-058 RM

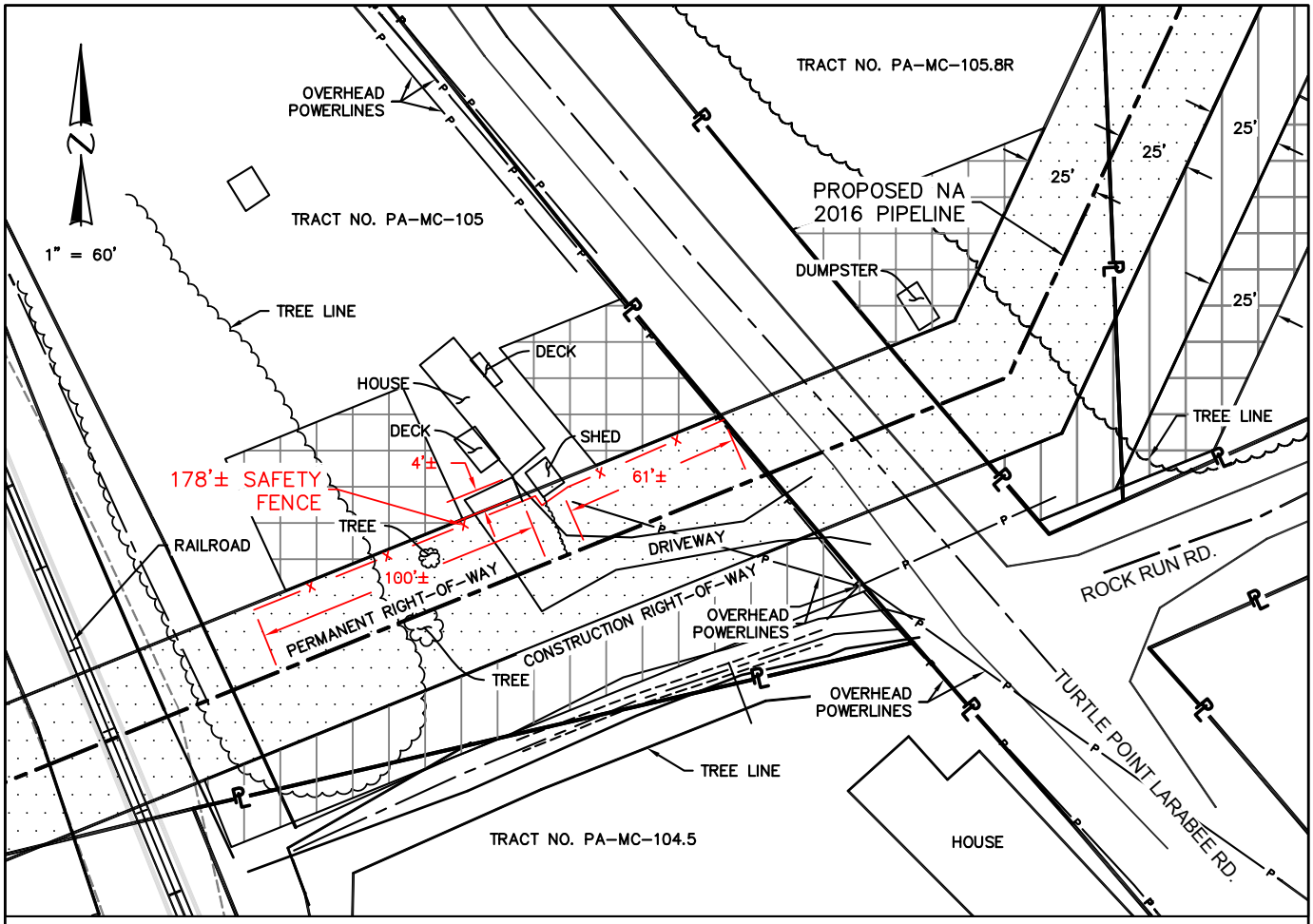

CONSTRUCTION REQUIREMENTS:

1. ALL PROPOSED CONSTRUCTION WORK AREA SHALL BE CONFINED TO THE LIMITS SHOWN ON THIS DRAWING.
2. CONTRACTOR SHALL ERECT AND MAINTAIN SAFETY FENCE AS SHOWN ON THIS DRAWING.
3. CONTRACTOR SHALL INSTALL AND MAINTAIN SEDIMENT CONTROL STRUCTURES AS REQUIRED BY APPLICABLE PERMITS AND PROTECT DOCUMENTS TO ENSURE THAT CONSTRUCTION SPOIL IS CONTAINED WITHIN THE APPROVED CONSTRUCTION WORK AREA.
4. VEHICLE ACCESS SHALL BE MAINTAINED TO THE RESIDENCES/BUSINESSES DURING THE CONSTRUCTION PERIOD.
5. TRENCH SHALL NOT BE EXCAVATED UNTIL PIPELINE IS READY FOR INSTALLATION IN THE AREA NEAR THE RESIDENCE SHOWN ON THIS DRAWING. DITCH SHALL BE EXCAVATED AND BACKFILLED IN THE SAME DAY, AND WHILE CONSTRUCTION ACTIVITIES ARE NOT IN PROGRESS.
6. OTHER EXISTING PHYSICAL FEATURES THAT NEED TO BE PROTECTED WILL BE ENCLOSED IN SAFETY FENCE TO AVOID DISTURBANCE DURING CONSTRUCTION.
7. DISTURBED ITEMS SUCH AS DRIVEWAYS, LAWNS AND LANDSCAPED AREAS SHALL BE RESTORED IMMEDIATELY AFTER FINAL GRADING (WEATHER DEPENDENT) EXCEPT FOR CONTRACTOR TRAVEL LANE.
8. CONTRACTOR SHALL COMPLY WITH ALL LOCAL NOISE ORDINANCES (IF APPLICABLE). WORK WILL ONLY BE DONE DURING DAYLIGHT HOURS.
9. CONTRACTOR SHALL TAKE APPROPRIATE MEANS TO MINIMIZE FUGITIVE DUST FROM CONSTRUCTION ACTIVITIES NEAR RESIDENCES/BUSINESSES.
10. CONTRACTOR TO NOTIFY LANDOWNER PRIOR TO PIPELINE INSTALLATION AND TO COORDINATE LANDOWNER ACCESS DURING CONSTRUCTION.

DESCRIPTION:

THIS DRAWING DOCUMENTS A RESIDENTIAL BUILDING NEAR THE PROPOSED CONSTRUCTION WORK AREA. CONTRACTOR SHALL COMPLY WITH THE FOLLOWING CONSTRUCTION MITIGATION REQUIREMENTS IN ADDITION TO THOSE LISTED IN THE CONSTRUCTION SPECIFICATIONS.

NOTES:

1. PROPERTY LINES DERIVED FROM PUBLICLY AVAILABLE DATA. BOUNDARY SURVEY WAS NOT PERFORMED TO LOCATE PROPERTY LINES.

LEGEND

- PERMANENT EASEMENT
- TEMPORARY WORKSPACE
- ADDITIONAL TEMPORARY WORKSPACE

Hatch Mott MacDonald
4200 East Skelly Drive, Suite 520
Tulsa, OK 74135
T: (918) 493-2221 ¤ F: (918) 494-3091

National Fuel

RESIDENTIAL MITIGATION MAP
NORTHERN ACCESS 2016
CERES TOWNSHIP
MILE POST 18.51
McKEAN COUNTY, PENNSYLVANIA

SCALE:	PROJ. ID	
AS NOTED	343699	PA-MC-105 RM

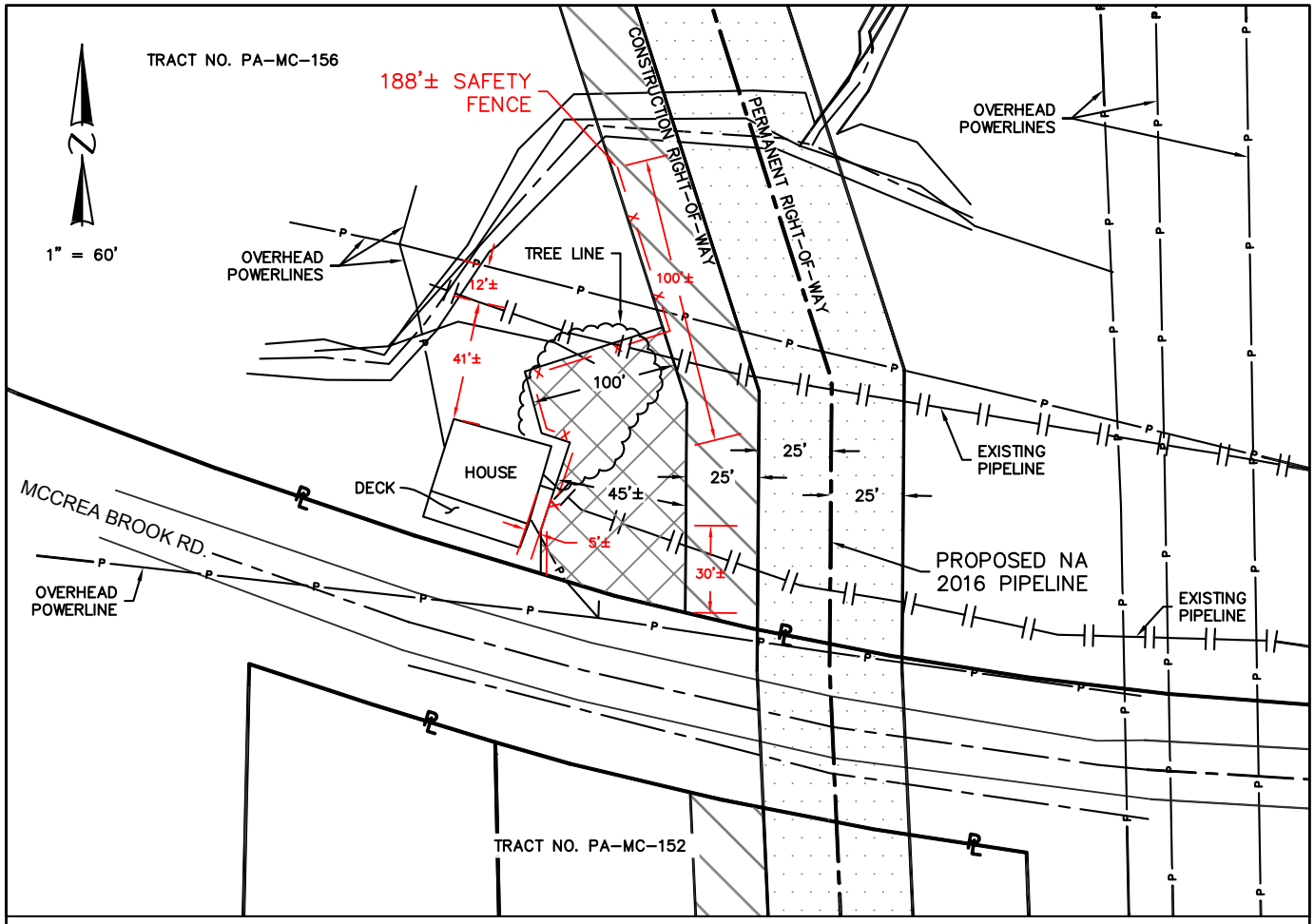

CONSTRUCTION REQUIREMENTS:

1. ALL PROPOSED CONSTRUCTION WORK AREA SHALL BE CONFINED TO THE LIMITS SHOWN ON THIS DRAWING.
2. CONTRACTOR SHALL ERECT AND MAINTAIN SAFETY FENCE AS SHOWN ON THIS DRAWING.
3. CONTRACTOR SHALL INSTALL AND MAINTAIN SEDIMENT CONTROL STRUCTURES AS REQUIRED BY APPLICABLE PERMITS AND PROTECT DOCUMENTS TO ENSURE THAT CONSTRUCTION SPOIL IS CONTAINED WITHIN THE APPROVED CONSTRUCTION WORK AREA.
4. VEHICLE ACCESS SHALL BE MAINTAINED TO THE RESIDENCES/BUSINESSES DURING THE CONSTRUCTION PERIOD.
5. TRENCH SHALL NOT BE EXCAVATED UNTIL PIPELINE IS READY FOR INSTALLATION IN THE AREA NEAR THE RESIDENCE SHOWN ON THIS DRAWING. DITCH SHALL BE EXCAVATED AND BACKFILLED IN THE SAME DAY, AND WHILE CONSTRUCTION ACTIVITIES ARE NOT IN PROGRESS.
6. OTHER EXISTING PHYSICAL FEATURES THAT NEED TO BE PROTECTED WILL BE ENCLOSED IN SAFETY FENCE TO AVOID DISTURBANCE DURING CONSTRUCTION.
7. DISTURBED ITEMS SUCH AS DRIVEWAYS, LAWNS AND LANDSCAPED AREAS SHALL BE RESTORED IMMEDIATELY AFTER FINAL GRADING (WEATHER DEPENDENT) EXCEPT FOR CONTRACTOR TRAVEL LANE.
8. CONTRACTOR SHALL COMPLY WITH ALL LOCAL NOISE ORDINANCES (IF APPLICABLE). WORK WILL ONLY BE DONE DURING DAYLIGHT HOURS.
9. CONTRACTOR SHALL TAKE APPROPRIATE MEANS TO MINIMIZE FUGITIVE DUST FROM CONSTRUCTION ACTIVITIES NEAR RESIDENCES/BUSINESSES.
10. CONTRACTOR TO NOTIFY LANDOWNER PRIOR TO PIPELINE INSTALLATION AND TO COORDINATE LANDOWNER ACCESS DURING CONSTRUCTION.

DESCRIPTION:

THIS DRAWING DOCUMENTS A RESIDENTIAL BUILDING NEAR THE PROPOSED CONSTRUCTION WORK AREA. CONTRACTOR SHALL COMPLY WITH THE FOLLOWING CONSTRUCTION MITIGATION REQUIREMENTS IN ADDITION TO THOSE LISTED IN THE CONSTRUCTION SPECIFICATIONS.

NOTES:

1. PROPERTY LINES DERIVED FROM PUBLICLY AVAILABLE DATA. BOUNDARY SURVEY WAS NOT PERFORMED TO LOCATE PROPERTY LINES.

LEGEND

- PERMANENT EASEMENT
- TEMPORARY WORKSPACE
- ADDITIONAL TEMPORARY WORKSPACE

Hatch Mott MacDonald
4200 East Skelly Drive, Suite 520
Tulsa, OK 74135
T: (918) 493-2221 ¤ F: (918) 494-3091

National Fuel

RESIDENTIAL MITIGATION MAP
NORTHERN ACCESS 2016
CERES TOWNSHIP
MILE POST 25.79
McKEAN COUNTY, PENNSYLVANIA

SCALE:	PROJ. ID	
AS NOTED	343699	PA-MC-156 RM

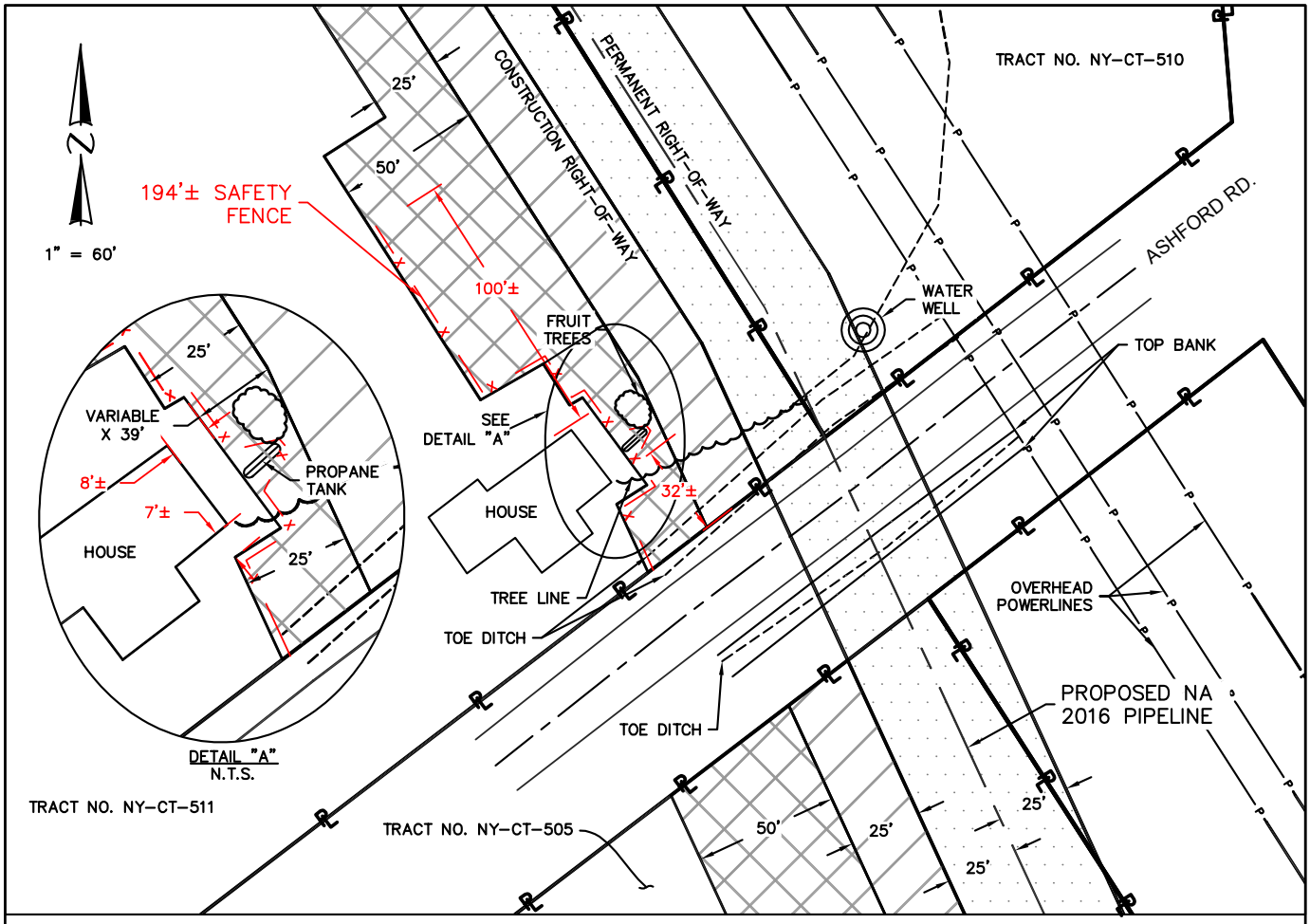

CONSTRUCTION REQUIREMENTS:

1. ALL PROPOSED CONSTRUCTION WORK AREA SHALL BE CONFINED TO THE LIMITS SHOWN ON THIS DRAWING.
2. CONTRACTOR SHALL ERECT AND MAINTAIN SAFETY FENCE AS SHOWN ON THIS DRAWING.
3. CONTRACTOR SHALL INSTALL AND MAINTAIN SEDIMENT CONTROL STRUCTURES AS REQUIRED BY APPLICABLE PERMITS AND PROTECT DOCUMENTS TO ENSURE THAT CONSTRUCTION SPOIL IS CONTAINED WITHIN THE APPROVED CONSTRUCTION WORK AREA.
4. VEHICLE ACCESS SHALL BE MAINTAINED TO THE RESIDENCES/BUSINESSES DURING THE CONSTRUCTION PERIOD.
5. TRENCH SHALL NOT BE EXCAVATED UNTIL PIPELINE IS READY FOR INSTALLATION IN THE AREA NEAR THE RESIDENCE SHOWN ON THIS DRAWING. DITCH SHALL BE EXCAVATED AND BACKFILLED IN THE SAME DAY, AND WHILE CONSTRUCTION ACTIVITIES ARE NOT IN PROGRESS.
6. OTHER EXISTING PHYSICAL FEATURES THAT NEED TO BE PROTECTED WILL BE ENCLOSED IN SAFETY FENCE TO AVOID DISTURBANCE DURING CONSTRUCTION.
7. DISTURBED ITEMS SUCH AS DRIVEWAYS, LAWNS AND LANDSCAPED AREAS SHALL BE RESTORED IMMEDIATELY AFTER FINAL GRADING (WEATHER DEPENDENT) EXCEPT FOR CONTRACTOR TRAVEL LANE.
8. CONTRACTOR SHALL COMPLY WITH ALL LOCAL NOISE ORDINANCES (IF APPLICABLE). WORK WILL ONLY BE DONE DURING DAYLIGHT HOURS.
9. CONTRACTOR SHALL TAKE APPROPRIATE MEANS TO MINIMIZE FUGITIVE DUST FROM CONSTRUCTION ACTIVITIES NEAR RESIDENCES/BUSINESSES.
10. CONTRACTOR TO NOTIFY LANDOWNER PRIOR TO PIPELINE INSTALLATION AND TO COORDINATE LANDOWNER ACCESS DURING CONSTRUCTION.

DESCRIPTION:

THIS DRAWING DOCUMENTS A RESIDENTIAL BUILDING NEAR THE PROPOSED CONSTRUCTION WORK AREA. CONTRACTOR SHALL COMPLY WITH THE FOLLOWING CONSTRUCTION MITIGATION REQUIREMENTS IN ADDITION TO THOSE LISTED IN THE CONSTRUCTION SPECIFICATIONS.

NOTES:

1. PROPERTY LINES DERIVED FROM PUBLICLY AVAILABLE DATA. BOUNDARY SURVEY WAS NOT PERFORMED TO LOCATE PROPERTY LINES.

LEGEND

- PERMANENT EASEMENT
- TEMPORARY WORKSPACE
- ADDITIONAL TEMPORARY WORKSPACE

Hatch Mott MacDonald
4200 East Skelly Drive, Suite 520
Tulsa, OK 74135
T: (918) 493-2221 ¤ F: (918) 494-3091

National Fuel

RESIDENTIAL MITIGATION MAP
NORTHERN ACCESS 2016
MACHIAS TOWNSHIP
MILE POST 61.21
CATTARAUGUS COUNTY, NEW YORK

SCALE:	PROJ. ID	
AS NOTED	343699	NY-CT-511 RM

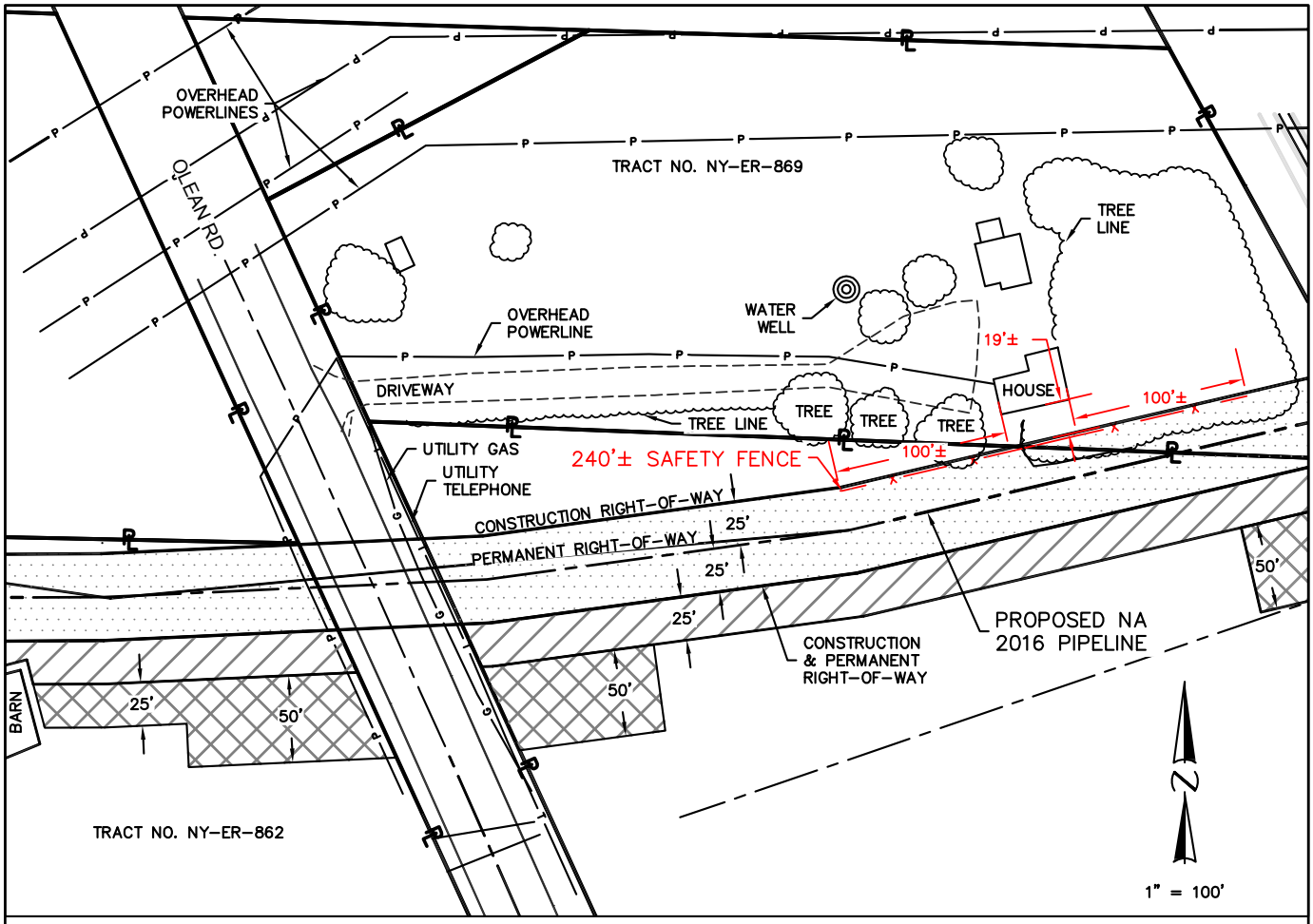

CONSTRUCTION REQUIREMENTS:

1. ALL PROPOSED CONSTRUCTION WORK AREA SHALL BE CONFINED TO THE LIMITS SHOWN ON THIS DRAWING.
2. CONTRACTOR SHALL ERECT AND MAINTAIN SAFETY FENCE AS SHOWN ON THIS DRAWING.
3. CONTRACTOR SHALL INSTALL AND MAINTAIN SEDIMENT CONTROL STRUCTURES AS REQUIRED BY APPLICABLE PERMITS AND PROTECT DOCUMENTS TO ENSURE THAT CONSTRUCTION SPOIL IS CONTAINED WITHIN THE APPROVED CONSTRUCTION WORK AREA.
4. VEHICLE ACCESS SHALL BE MAINTAINED TO THE RESIDENCES/BUSINESSES DURING THE CONSTRUCTION PERIOD.
5. TRENCH SHALL NOT BE EXCAVATED UNTIL PIPELINE IS READY FOR INSTALLATION IN THE AREA NEAR THE RESIDENCE SHOWN ON THIS DRAWING. DITCH SHALL BE EXCAVATED AND BACKFILLED IN THE SAME DAY, AND WHILE CONSTRUCTION ACTIVITIES ARE NOT IN PROGRESS.
6. OTHER EXISTING PHYSICAL FEATURES THAT NEED TO BE PROTECTED WILL BE ENCLOSED IN SAFETY FENCE TO AVOID DISTURBANCE DURING CONSTRUCTION.
7. DISTURBED ITEMS SUCH AS DRIVEWAYS, LAWNS AND LANDSCAPED AREAS SHALL BE RESTORED IMMEDIATELY AFTER FINAL GRADING (WEATHER DEPENDENT) EXCEPT FOR CONTRACTOR TRAVEL LANE.
8. CONTRACTOR SHALL COMPLY WITH ALL LOCAL NOISE ORDINANCES (IF APPLICABLE). WORK WILL ONLY BE DONE DURING DAYLIGHT HOURS.
9. CONTRACTOR SHALL TAKE APPROPRIATE MEANS TO MINIMIZE FUGITIVE DUST FROM CONSTRUCTION ACTIVITIES NEAR RESIDENCES/BUSINESSES.
10. CONTRACTOR TO NOTIFY LANDOWNER PRIOR TO PIPELINE INSTALLATION AND TO COORDINATE LANDOWNER ACCESS DURING CONSTRUCTION.

DESCRIPTION:

THIS DRAWING DOCUMENTS A RESIDENTIAL BUILDING NEAR THE PROPOSED CONSTRUCTION WORK AREA. CONTRACTOR SHALL COMPLY WITH THE FOLLOWING CONSTRUCTION MITIGATION REQUIREMENTS IN ADDITION TO THOSE LISTED IN THE CONSTRUCTION SPECIFICATIONS.

NOTES:

1. PROPERTY LINES DERIVED FROM PUBLICLY AVAILABLE DATA. BOUNDARY SURVEY WAS NOT PERFORMED TO LOCATE PROPERTY LINES.

LEGEND

- PERMANENT EASEMENT
- TEMPORARY WORKSPACE
- ADDITIONAL TEMPORARY WORKSPACE

Hatch Mott MacDonald
4200 East Skelly Drive, Suite 520
Tulsa, OK 74135
T: (918) 493-2221 ¤ F: (918) 494-3091

National Fuel

RESIDENTIAL MITIGATION MAP
NORTHERN ACCESS 2016
AURORA TOWNSHIP
MILE POST 89.28
ERIE COUNTY, NEW YORK

SCALE:	PROJ. ID	
AS NOTED	343699	NY-ER-869 RM

20160727-4003 FERC PDF (Unofficial) 07/27/2016

APPENDIX G

PROJECTS CONSIDERED FOR CUMULATIVE IMPACTS WITH THE PROPOSED PROJECT

TABLE G-1

Existing and Future FERC Jurisdictional Projects Evaluated for Cumulative Impacts

Project Name	Location	Project Description	Nearest Facility Location	Approximate Distance from Project Right-of-Way	Status	Date of Construction Activities	Impacted Resources
FERC-Jurisdictional Projects							
TGP 300 Line Project (Docket No. CP09-444)	Various counties in PA	127 miles of looping pipeline, two new compressor stations, and modifications at seven compressor stations on 300 Line.	Pipeline, McKean County, PA	0 mile	Approved	Completed October 2012	Water Resources, Vegetation/Fisheries/ Wildlife, Threatened and Endangered Species, Land Use and Visual Resources, Socioeconomics, Climate Change
TGP Northeast Supply Diversification and Ellisburg to Craigs Projects (Docket Nos. CP11-30 and CP11-41)	Bradford and Tioga Counties, PA; Niagara, Erie, and Livingston Counties, NY	6.8 miles of looping pipeline; compressor station and meter station modifications on 300 Line.	Proposed Pendleton Compressor Station; Wheatfield Dehydration Facility; EMP-03 Pipeline, Niagara County, NY	0 mile	Approved	Completed November 2012	Water Resources, Vegetation/Fisheries/ Wildlife, Threatened and Endangered Species, Land Use and Visual Resources, Socioeconomics, Air Quality, Climate Change
National Fuel Northern Access Project (Docket No. CP11-128)	Potter County, PA; Erie County, NY	New compressor station, new meter station, and modification to existing compressor station.	Existing Porterville Compressor Station; Pipeline, Erie County, NY	0 mile	Approved	Completed November 2012	Water Resources, Vegetation/Fisheries/ Wildlife, Threatened and Endangered Species, Land Use and Visual Resources, Socioeconomic, Climate Change
TGP Station 230C Project (Docket No. CP11-133)	Niagara County, NY	Modifications at compressor stations.	Proposed Pendleton Compressor Station; Wheatfield Dehydration Facility; EMP-03 Pipeline, Niagara County, NY	4.5 miles	Approved	Completed October 2014	Water Resources, Vegetation/Fisheries/ Wildlife, Threatened and Endangered Species, Land Use and Visual Resources, Socioeconomics, Climate Change

TABLE G-1 (cont'd)

Existing and Future FERC Jurisdictional Projects Evaluated for Cumulative Impacts

Project Name	Location	Project Description	Nearest Facility Location	Approximate Distance from Project Right-of-Way	Status	Date of Construction Activities	Impacted Resources
TGP Niagara Expansion Project (Docket No. CP14-88)	Mercer County, PA; Erie and Chautauqua Counties, NY	3.1 miles of looping pipeline; modifications at compressor station and meter station.	Pipeline, Erie County, NY	0 mile	Approved	Completed November 2015	Water Resources, Vegetation/Fisheries/ Wildlife, Threatened and Endangered Species, Land Use and Visual Resources, Socioeconomics, Climate Change
National Fuel Line TNY Replacement Project	Erie County, NY	6 miles of pipeline and appurtenant facilities.	Pipeline, Erie County, NY	11 miles	Approved	Completed October 2014	Water Resources, Vegetation/Fisheries/ Wildlife, Socioeconomics, Climate Change
National Fuel Northern Access 2015 Project (Docket No. CP14-100)	Chautauqua, Cattaraugus, and Erie Counties, NY	New compressor station; modifications to compressor station and meter station.	Pipeline, Cattaraugus and Erie Counties, NY	0 mile	Approved	Completed November 2015; Ongoing restoration until summer 2016	Water Resources, Vegetation/Fisheries/ Wildlife, Threatened and Endangered Species, Land Use and Visual Resources, Air Quality, Noise, Climate Change
National Fuel Line KNY and KM3 Replacement Project (Docket No. CP14-107	Erie and Cattaraugus Counties, NY	4.7 miles of replacement pipeline.	Pipeline, Cattaraugus and Erie Counties, NY	16 miles	Approved	Completed October 2014	Water Resources, Vegetation/Fisheries/ Wildlife, Socioeconomics
National Fuel KNY 2.43 Mile Replacement Project	Cattaraugus County, NY	2.4 miles of replacement pipeline.	Pipeline, Cattaraugus County, NY	15 miles	Approved	Recently Completed	Water Resources, Vegetation/Fisheries/ Wildlife, Socioeconomics
Empire North Expansion Project	Tioga and Niagara Counties, PA	Development of new pipeline laterals in Tioga County, Pennsylvania which would connect to existing TransCanada Pipeline at Chippewa, Canada to the TGP 200 Line at Hopewell, NY.	Empire interconnection in Niagara County, NY	<1 mile	Proposed	Future	Soil and Geology, Water Resources, Vegetation/Fisheries/ Wildlife, Threatened and Endangered Species, Land Use and Visual Resources, Socioeconomics, Air Quality, Climate Change, Noise
National Fuel's Line NM-44 NY and Line U 2015 Replacement Project	Erie County, NY	3.3 miles of replacement pipeline.	Pipeline, Erie County, NY; Porterville Compressor Station	0 mile	Approved	Completed October 2015	Water Resources, Vegetation/Fisheries/ Wildlife, Threatened and Endangered Species, Land Use and Visual Resources, Socioeconomics

TABLE G-1 (cont'd)

Existing and Future FERC Jurisdictional Projects Evaluated for Cumulative Impacts

Project Name	Location	Project Description	Nearest Facility Location	Approximate Distance from Project Right-of-Way	Status	Date of Construction Activities	Impacted Resources
FERC Regulated Hydropower Projects							
ECOsponsible, Inc.'s Niagara River Community Hydro Project	Erie County, NY	Proposed hydro-electric project.	Wheatfield Dehydration Facility	10 miles	Pending	Unknown	Water Resources, Vegetation/Fisheries/ Wildlife, Land Use and Visual Resources, Socioeconomics
ECOsponsible, Inc.'s Niagara River Community Hydro Project #2	Niagara County, NY	Proposed hydro-electric project.	Wheatfield Dehydration Facility	8 miles	Pending	Unknown	Water Resources, Vegetation/Fisheries/ Wildlife, Land Use and Visual Resources, Socioeconomics
KC Small Hydro LLC's Scoby Dam Hydropower Project	Niagara County, NY	Proposed hydro-electric project.	Wheatfield Dehydration Facility	10 miles	Pending	Unknown	Water Resources, Vegetation/Fisheries/ Wildlife, Land Use and Visual Resources, Socioeconomics

TABLE G-2

Existing or Future Non-jurisdictional Projects Evaluated for Potential Cumulative Impacts

Project or Development	Location	Project Description	Nearest Facility Location	Approximate Distance from Project Right-of-Way	Permitting Status	Date of Construction Activities	Impacted Resources
Non FERC-Jurisdictional Oil and Gas Projects							
CM43S/CM42S Pipeline Hemstreet Road to Reiter Road	Erie County, NY	Project replaced approximately 3.89 miles of 12-inch-diameter natural gas pipeline and 8-inch-diameter natural gas pipeline with one new 16-inch-diameter pipeline.	Pipeline, Erie County, NY; Porterville Compressor Station	1.5 miles	Approved	Completed 2015	Water Resources, Vegetation/Fisheries/Wildlife, Threatened and Endangered Species, Land Use and Visual Resources, Socioeconomics, Climate Change
CM43S/CM42S Pipeline Hemstreet Road to Reiter Road	Erie County, NY	Project replaced approximately 3.89 miles of 12-inch-diameter natural gas pipeline and 8-inch-diameter natural gas pipeline with one new 16-inch-diameter pipeline.	Pipeline, Erie County, NY; Porterville Compressor Station	1.5 miles	Approved	Completed 2015	Water Resources, Vegetation/Fisheries/Wildlife, Threatened and Endangered Species, Land Use and Visual Resources, Socioeconomics, Climate Change
Clermont Phase 2 North West	Elk County, PA	Project constructed and maintained approximately 7.8 miles of one 16-inch-diameter and one 12-inch-diameter natural gas pipeline located in Jones Township, Elk County and Sergeant Township, McKean County.	Pipeline, McKean County, PA	5.6 miles	Permitted	Recently Completed	Water Resources, Vegetation/Fisheries/Wildlife, Land Use and Visual Resources, Climate Change

TABLE G-2 (cont'd)

Existing or Future Non-jurisdictional Projects Evaluated for Potential Cumulative Impacts

Project or Development	Location	Project Description	Nearest Facility Location	Approximate Distance from Project Right-of-Way	Permitting Status	Date of Construction Activities	Impacted Resources
24-inch-diameter pipeline NFG Midstream Clermont, LLC.	McKean County, PA	Approximately 2 miles of 24-inch-diameter natural gas pipeline installation.	Pipeline, McKean County, PA; Clermont Interconnect	0 mile	Approved	Under Construction 2016	Soil and Geology, Water Resources, Vegetation/Fisheries/Wildlife, Threatened and Endangered Species, Land Use and Visual Resources, Socioeconomics, Air Quality, Climate Change, Noise
Clermont West Branch D07-U Pipeline	McKean County, PA	Construct and maintain two 8-inch-diameter natural gas gathering lines, one 12-inch-diameter natural gas gathering line, and one 16-inch-diameter natural gas gathering line. The natural gas lines will transport natural gas from a well pad to a compressor station.	Pipeline, McKean County, PA	1.9 miles	Approved	Anticipated Construction Fall 2016	Water Resources, Vegetation/Fisheries/Wildlife, Threatened and Endangered Species, Land Use and Visual Resources, Socioeconomics, Climate Change
Oil and Natural Gas Wells and gathering lines	Various possible locations in McKean County, PA	Various possible location in McKean County, PA; ongoing construction activities associated with Marcellus Shale development	Pipeline, McKean County, PA	Varies	Permitted	Ongoing	Soil and Geology, Water Resources, Vegetation/Fisheries/Wildlife, Threatened and Endangered Species, Land Use and Visual Resources, Socioeconomics, Air Quality, Climate Change, Noise
PA General Energy Company Potato Creek 1H Compressor Station	McKean County, PA	Project to construct and/or operate a 203 hp compressor engine (Caterpillar G3306-TA) and four storage tanks.	Pipeline, McKean County, PA	5 miles	Under review	Unknown; Planning Authorized October 2015	Water Resources, Vegetation/Fisheries/Wildlife, Land Use and Visual Resources, Socioeconomics, Climate Change

TABLE G-2 (cont'd)

Existing or Future Non-jurisdictional Projects Evaluated for Potential Cumulative Impacts

Project or Development	Location	Project Description	Nearest Facility Location	Approximate Distance from Project Right-of-Way	Permitting Status	Date of Construction Activities	Impacted Resources
United Refining Company	Warren County, PA	Construction of a new 10 MMscfds steam methane reformer (SMR) hydrogen plant at United Refining Company's facility in the City of Warren, Warren County. The SMR plant will produce high-purity hydrogen from natural gas and supplemental gas feeds.	Pipeline, McKean County, PA	33 miles	Under review	Unknown; Regulatory Approval July 2015	Water Resources, Vegetation/Fisheries/Wildlife, Climate Change
Pennsylvania General Energy Zimmerman Hill Compressor Station	Warren County, PA	Project seeks approval to operate two natural gas fired 600 hp Ajax DPC LE engines, one natural gas fired 360 hp Ajax DPC360 LE engine, one natural gas fired 280 hp Ajax DPC280 LE engine, 8 miscellaneous storage tanks, and associated piping and components.	Pipeline, McKean County, PA	34 miles	Under review	Unknown; Plan Approval December 2015	Water Resources, Vegetation/Fisheries/Wildlife, Climate Change
Mining Projects							
Gernatt Vail Road Pit	Erie County, NY	Project seeks approval to expand existing surface unconsolidated sand and gravel mine by an additional 7.5 acres to a total life-of-mine area of 76.75 acres. Dry processing of material will take place on-site using portable equipment. Reclamation will be to open space/farm field.	Pipeline, Erie County, NY	20 miles	Under review	Unknown; Application Completed September 2014	Water Resources, Vegetation/Fisheries/Wildlife, Socioeconomics

TABLE G-2 (cont'd)

Existing or Future Non-jurisdictional Projects Evaluated for Potential Cumulative Impacts

Project or Development	Location	Project Description	Nearest Facility Location	Approximate Distance from Project Right-of-Way	Permitting Status	Date of Construction Activities	Impacted Resources
Hard Rock Gravel Products	Cattaraugus County, NY	Project includes modification of current mining and reclamation plan and leaves a 6.1 acre area surrounding tributary 2 to Sucker Pond in its natural state, which would divide mine limits into the West and East Mine Areas.	Pipeline, Cattaraugus County, NY	0.4 mile	Under review	Unknown; Application Completed December 2015	Water Resources, Vegetation/Fisheries/Wildlife, Threatened and Endangered Species, Land Use and Visual Resources, Socioeconomics
Gernatt Gabel/Thomas S & G Mine	Erie County, NY	Action to modify an existing Mined Land Reclamation permit by a change to the hours of operation at the site; removal of sand and gravel from site's berm footprint in certain areas prior to the berm's construction; and screening of excavated materials (soil, sand, gravel) outside the presently permitted processing area.	Pipeline, Erie County, NY	2.5 miles	Under review	Unknown; Application Completed February 2015	Water Resources, Vegetation/Fisheries/Wildlife, Threatened and Endangered Species, Land Use and Visual Resources, Socioeconomics
Gernatt Asphalt Products Vaughn Gravel Pit Modification Deposit	Erie County, NY	Action seeking approval to extend the excavation depth within mining area is proposed to be below the groundwater table to a maximum depth of 67.0 feet. The proposed modification plan is to create a lake approximately 43.0 acres in size with a maximum depth of 67.0 feet.	Pipeline, Erie County, NY	4.3 miles	Under review	Unknown; Application Completed April 2015	Water Resources, Vegetation/Fisheries/Wildlife, Threatened and Endangered Species, Land Use and Visual Resources, Socioeconomics

TABLE G-2 (cont'd)

Existing or Future Non-jurisdictional Projects Evaluated for Potential Cumulative Impacts

Project or Development	Location	Project Description	Nearest Facility Location	Approximate Distance from Project Right-of-Way	Permitting Status	Date of Construction Activities	Impacted Resources
Como Quarry	Erie County, NY	Project includes a 4.3-acre expansion of the Como Quarry for construction of a permanent earthen berm to delineate the property line between the Buffalo Crushed Stone property and the adjacent scrap metal recycling facility.	Pipeline, Erie County, NY; Porterville Compressor Station	10 miles	Under Review	Unknown; Preliminary Approval June 2014	Water Resources, Vegetation/Fisheries/Wildlife, Land Use and Visual Resources, Socioeconomics
Gernatt Asphalt Products – Bedrock Gravel Pit	Cattaraugus County, NY	Project proposes to mine the 150 foot "Setback Area" located between the 48.8 acre lake created by mining activities and Horton Road. The Setback Area is within the existing life-of-mine limits and is presently permitted for storage of stripped topsoil and overburden material. The plan calls for excavation up to 25 feet of Horton Road to the same above and below water slopes as before, increasing the lake created by mining by 9.7 acres to 58.5 acres.	Pipeline, Cattaraugus County, NY	11 miles	Under review	Unknown; Application Completed September 2014	Water Resources, Vegetation/Fisheries/Wildlife, Socioeconomics
Carroll/Cameron Mine Bone Run Road off County Route 318	Chautauqua County, NY	Project applicant seeks to mine sand and gravel from an additional 23 acres of land which are within the same parcel and east of the existing mining operation on property owned by James Gravel Products.	Pipeline, Chautauqua County, NY	30 miles	Under review	Unknown; Regulatory Review February 2015	Water Resources, Vegetation/Fisheries/Wildlife

TABLE G-2 (cont'd)

Existing or Future Non-jurisdictional Projects Evaluated for Potential Cumulative Impacts

Project or Development	Location	Project Description	Nearest Facility Location	Approximate Distance from Project Right-of-Way	Permitting Status	Date of Construction Activities	Impacted Resources
Briggs Mine	Chautauqua County, NY	Project applicant proposes to renew sand and gravel mining permit to include a 19 acre expansion to the life of mine limits, and to excavate into the groundwater table within the currently permitted mining area to make a 2.9 acre pond. The facility is currently permitted for mining on 17.8 acres out of approximately 221 acres owned by the applicant at this location.	Pipeline, Chautauqua County, NY	58 miles	Under review	Unknown; Application Completed January 2016	Water Resources, Vegetation/Fisheries/Wildlife
Electrical Projects							
Pierce Brooke- Lewis Run 230 kV Transmission Line Project (Trans-Allegheny Interstate Line Company)	McKean County, PA	Installation of a new substation along Pierce Brook Road in Keating Township, Pennsylvania. Installation of a 15-mile 230 kV transmission line from Lewis Run Substation in Bradford Township to the new Pierce Brook Substation.	Pipeline, McKean County PA	0 mile	Permitted	Construction June 2015, assumed complete	Water Resources, Vegetation/Fisheries/Wildlife, Threatened and Endangered Species, Land Use and Visual Resources, Socioeconomics, Climate Change
National Grid's Five Mile Road Station	Cattaraugus County, NY	New 345kV to 115kV station.	Pipeline Cattaraugus County, NY	3.5 miles	Permitted	Completed Early 2016	Water Resources, Vegetation/Fisheries/Wildlife, Threatened and Endangered Species, Land Use and Visual Resources, Socioeconomics, Climate Change

TABLE G-2 (cont'd)

Existing or Future Non-jurisdictional Projects Evaluated for Potential Cumulative Impacts

Project or Development	Location	Project Description	Nearest Facility Location	Approximate Distance from Project Right-of-Way	Permitting Status	Date of Construction Activities	Impacted Resources
Buffalo Bioenergy Anaerobic Digestion Facility	Erie County, NY	The anaerobic digestion facilities are designed to convert certain approved waste products into biogas, that is then converted into electricity. The project includes facility upgrades including a heat treatment process, a nutrient resource recovery system, and dewatering at the Buffalo BioEnergy Anaerobic Digestion Facility. A new, approximately 3,200 square foot building will be constructed on the site to house these processes and the scrubbing towers will be located outside.	Pipeline Erie County, NY; Porterville Compressor Station	8.5 miles	Under review	Unknown; Application Completed September 2015	Water Resources, Vegetation/Fisheries/Wildlife, Land Use and Visual Resources
Call Hill Wind - 102 MW, a NextEra Energy Resources Project	Steuben and Allegany Counties, NY	102 MW wind energy project.	Pipeline in Allegany County, NY	>10 miles	Under review	Planning	Water Resources, Vegetation/Fisheries/Wildlife, Socioeconomics
Pennsylvania Electric Company - new substation and transmission line	McKean County, PA	Installation of new line and substation.	Crosses Pipeline in McKean County, PA	0 mile	Under review	Planning	Soil and Geology, Water Resources, Vegetation/Fisheries/Wildlife, Threatened and Endangered Species, Land Use and Visual Resources, Socioeconomics, Air Quality, Climate Change, Noise

TABLE G-2 (cont'd)

Existing or Future Non-jurisdictional Projects Evaluated for Potential Cumulative Impacts

Project or Development	Location	Project Description	Nearest Facility Location	Approximate Distance from Project Right-of-Way	Permitting Status	Date of Construction Activities	Impacted Resources
Miscellaneous Utility Projects							
Niagara Tunnel Project, Sir Adam Beck hydroelectric generation complex	Niagara, Ontario, Canada	Completion of 41-foot-wide tunnel approximately 6.3 miles long tunnel used to divert water from the Niagara River and carries the water downstream to the Sir Adam Beck Generating Stations to provide additional water to generate clean, renewable electricity.	Wheatfield Dehydration Facility	7.5 miles	Approved	Completed 2013	Water Resources, Vegetation/Fisheries/Wildlife, Land Use and Visual Resources
Well and Wastewater Treatment Plant and Raw Sewage Pumping Station	Ontario, Canada	Upgrades geared to improve the degree of operability and increase the capacity of various process units.	Wheatfield Dehydration Facility	17 miles	Approved	Completed	Water Resources, Vegetation/Fisheries/Wildlife
Keating Township - sewer system installation	McKean County, PA	Sewer construction project.	Crosses Pipeline at MP 8.5 in McKean County, PA	0 mile	Permitted	Anticipated In-service Early 2017	Soil and Geology, Water Resources, Vegetation/Fisheries/Wildlife, Threatened and Endangered Species, Land Use and Visual Resources, Socioeconomics, Air Quality, Noise
Town of Machias, Lime Lake Sewer District Sewer Collection infrastructure project	Cattaraugus County, NY	7.1 mile sewer collection system.	Approximately 1 mile from the pipeline in Cattaraugus County, NY	1 mile	Under review	Planning	Water Resources, Vegetation/Fisheries/Wildlife, Threatened and Endangered Species, Land Use and Visual Resources, Socioeconomics

TABLE G-2 (cont'd)

Existing or Future Non-jurisdictional Projects Evaluated for Potential Cumulative Impacts

Project or Development	Location	Project Description	Nearest Facility Location	Approximate Distance from Project Right-of-Way	Permitting Status	Date of Construction Activities	Impacted Resources
Niagara County Water District Transmission Main Phase 2 Lockport Rd and Campbell Blvd to Village Middleport Pendleton, New York	Niagara County, NY	Project includes the installation of a 36-, 24- and 16-inch-diameter water transmission mains running from just east of the intersection of Lockport Road and Campbell Blvd in the Towns of Pendleton and Lockport to the intersection of Freeman and Telegraph Roads in the Village of Middleport, approximately 20 miles.	EMP-03 Pipeline; Proposed Pendleton Compressor Station	4 miles	Under review	Unknown; Application Completed October 2015	Water Resources, Vegetation/Fisheries/Wildlife, Threatened and Endangered Species, Land Use and Visual Resources, Socioeconomics
Batavia - T Pratt Road Water District	Genesee County, NY	Installation of approximately 16,000 linear feet of 8-inch-diameter water main, valves, hydrants and other appurtenances along the south side of Pratt Road and the east side of Powers Road.	Pipeline, Erie County, NY; Porterville Compressor Station	20 miles	Under review	Unknown; Application Completed August 2015	Water Resources, Vegetation/Fisheries/Wildlife
Erie Co Sturgeon Point Water Treatment Plant	Erie County, NY	Project includes improvements to the residuals handling facilities at the Erie County Water Authority Sturgeon Point Water Treatment Plant.	Pipeline, Erie County, NY	21 miles	Under review	Unknown; Application Completed July 2014	Water Resources, Vegetation/Fisheries/Wildlife, Socioeconomics
Niagara Falls Water Treatment Plant Upgrade - Niagara Falls Dechlorination and Process Waste Systems	Niagara, Ontario, Canada	Upgrades to the dechlorination and process waste systems at the Niagara Falls Water Treatment Plant.	Wheatfield Dehydration Facility	6.6 miles	Proposed	Future	Water Resources, Vegetation/Fisheries/Wildlife, Land Use and Visual Resources
Waste Water Treatment Plant Upgrade - Anger Ave (Phase 2)	Niagara, Ontario, Canada	Process upgrades to the system, lab, and operations office.	Wheatfield Dehydration Facility	10 miles	Proposed	Future	Water Resources, Vegetation/Fisheries/Wildlife, Land Use and Visual Resources

TABLE G-2 (cont'd)

Existing or Future Non-jurisdictional Projects Evaluated for Potential Cumulative Impacts

Project or Development	Location	Project Description	Nearest Facility Location	Approximate Distance from Project Right-of-Way	Permitting Status	Date of Construction Activities	Impacted Resources
WWTP Upgrade – Port Weller Fine Bubble Aeration & Switchgear (Wastewater Treatment facility)	Saint Catherines, Ontario, Canada	Install new high-efficiency O2Max Aerators at the Port Weller WWTP as a secondary treatment plant.	Wheatfield Dehydration Facility	18 miles	Proposed	Future	Water Resources, Vegetation/Fisheries/Wildlife, Land Use and Visual Resources
Miscellaneous Developments							
Spring Brook Habitat Enhancement Project Upstream of South Buffalo Street Springville, New York	Erie County, NY	Habitat improvement project installed fish habitat structures, approximately 343 linear feet of longitudinal peaked stone, 64 linear feet of slope rock bank protection, rock weir deflectors, rock keys, and riparian plantings.	Pipeline, Erie County, NY	6.5 miles	Approved	Completed 2014	Water Resources, Vegetation/Fisheries/Wildlife, Land Use and Visual Resources, Socioeconomics
Armstrong Property 154 Mill Rd East Aurora, NY 14052	Erie County, NY	The project involved construction of a soldier pile retaining wall and stabilization of approximately 140 feet of streambank adjacent to East Branch Cazenovia Creek.	Pipeline, Erie County, NY; Porterville Compressor Station	1.5 miles	Approved	Completed 2015	Water Resources, Vegetation/Fisheries/Wildlife, Threatened and Endangered Species, Land Use and Visual Resources, Socioeconomics
Cattaraugus Creek and Clear Creek Bank Stabilization Project	Wyoming County, NY	Project added bank stabilization along the northern bank of Clear Creek approximately 350 feet in length as part of the previously permitted stabilization of approximately 2,000 feet of streambank along Cattaraugus Creek and Clear Creek in the Village of Arcade.	Pipeline, Erie County, NY	4.3 miles	Approved	Completed 2015	Water Resources, Vegetation/Fisheries/Wildlife, Threatened and Endangered Species, Land Use and Visual Resources
Community Bank/Olean Physical Therapy Office	Cattaraugus County, NY	Community Bank facility.	Pipeline, Cattaraugus County, NY	8 miles	Permitted	Completed 2015	Water Resources, Vegetation/Fisheries/Wildlife, Land Use and Visual Resources, Socioeconomics

TABLE G-2 (cont'd)

Existing or Future Non-jurisdictional Projects Evaluated for Potential Cumulative Impacts

Project or Development	Location	Project Description	Nearest Facility Location	Approximate Distance from Project Right-of-Way	Permitting Status	Date of Construction Activities	Impacted Resources
Westmont Ridge Planned Unit Development, Town of Mansfield	Cattaraugus County, NY	Construction of up to 93 single family homes; 72 townhouses; new day lodge; a relocated ski slope, new skate pond and other recreational features; a 400 vehicle parking lot, and associated infrastructure. Project will be built in phases.	Pipeline, Cattaraugus County, NY	9 miles	Permitted	Anticipated Completion in 2016	Water Resources, Vegetation/Fisheries/Wildlife, Land Use and Visual Resources, Socioeconomics
Aspen Dental Office, Town of Allegany	Cattaraugus County, NY	Construction of a dental office.	Pipeline, Cattaraugus County, NY	7 miles	Permitted	Anticipated Completion in 2016	Land Use and Visual Resources, Socioeconomics
Proposed Retail / Warehouse Facility	Niagara County, NY	Project proposes construction of 4,200 square foot retail/ warehouse building with parking on a .57 acre portion of the 1.1 acre parcel.	EMP-03 Pipeline; Proposed Pendleton Compressor Station	1.5 miles	Permitted	Under Construction; Application Completed April 2015	Water Resources, Vegetation/Fisheries/Wildlife, Threatened and Endangered Species, Land Use and Visual Resources, Socioeconomics
Beach Ridge Meadows Subdivision	Niagara County, NY	A major subdivision (19 lots) project located in Pendleton, NY.	EMP-03 Pipeline; Proposed Pendleton Compressor Station	0.1 mile	Under review	Planning	Soil and Geology, Water Resources, Vegetation/Fisheries/Wildlife, Threatened and Endangered Species, Land Use and Visual Resources, Socioeconomics, Air Quality, Noise
Rector Property 307 Lakeview Blvd Machias, NY 14101	Cattaraugus County, NY	Project includes installation of 216 linear feet of breakwall along the shore of Lime Lake in front of an existing breakwall, which is deteriorating.	Pipeline, Cattaraugus County, NY	0.6 miles	Under review	Unknown; Application Completed November 2015	Water Resources, Vegetation/Fisheries/Wildlife, Threatened and Endangered Species, Land Use and Visual Resources, Socioeconomics
Cobblestone Creek Subdivision	Niagara County, NY	Project proposes development of 43 lots on approximately 15.8 acres of the 26-acre subdivision lot.	Wheatfield Dehydration Facility; Pendleton Compressor Station	2.3 miles	Under review	Planning	Water Resources, Vegetation/Fisheries/Wildlife, Threatened and Endangered Species, Land Use and Visual Resources, Socioeconomics

TABLE G-2 (cont'd)

Existing or Future Non-jurisdictional Projects Evaluated for Potential Cumulative Impacts

Project or Development	Location	Project Description	Nearest Facility Location	Approximate Distance from Project Right-of-Way	Permitting Status	Date of Construction Activities	Impacted Resources
Niagara River Fish Attraction Structures Phase II (Niagara Musky Association Inc.)	Erie County, NY	Placement of fish attraction structures at four locations in the Upper Niagara River.	Wheatfield Dehydration Facility / EMP-03; Pendleton Compressor Station	3 miles	Under review	Unknown; Application Completed August 2015	Water Resources, Vegetation/Fisheries/Wildlife, Threatened and Endangered Species, Land Use and Visual Resources, Socioeconomics
Heritage Landings Subdivision	Niagara County, NY	Project proposes construction of an 86 lot subdivision on Feigle Road in the Town of Pendleton.	EMP-03; Pendleton Compressor Station	3 miles	Under review	Planning	Water Resources, Vegetation/Fisheries/Wildlife, Threatened and Endangered Species, Land Use and Visual Resources, Socioeconomics
Tonawanda Bioremediation Facility	Erie County, NY	Proposed biotreatment facility to treat petroleum impacted soils at the Tonawanda Landfill in the Town of Tonawanda.	Wheatfield Dehydration Facility, EMP-03 Pipeline	6 miles	Under review	Unknown; Application Completed June 2015	Water Resources, Vegetation/Fisheries/Wildlife, Land Use and Visual Resources, Socioeconomics
Proposed Mixed Use Development Project	Cattaraugus County, NY	Proposed mixed use development project (Brownfield Conversion Site).	Pipeline, Cattaraugus County, NY	7 miles	Under review	Planning	Water Resources, Vegetation/Fisheries/Wildlife, Land Use and Visual Resources, Socioeconomics
Willow Creek Farm	Niagara County, NY	Project includes operation of a construction and demolition debris processing facility.	EMP-03 Pipeline; Proposed Pendleton Compressor Station	7 miles	Under review	Unknown; Application Completed December 2015	Water Resources, Vegetation/Fisheries/Wildlife, Land Use and Visual Resources, Socioeconomics
West Valley Demonstration Project	Cattaraugus County, NY	Application for the relocation of stormwater outfall S09 to redirect flow to Franks Creek, downstream of the existing discharge point to prevent further erosion at its current location.	Pipeline, Cattaraugus County, NY	8 miles	Under review	Unknown; Application Completed June 2015	Water Resources, Vegetation/Fisheries/Wildlife, Land Use and Visual Resources, Socioeconomics
42 Degrees North Subdivision, Town of Ellicottville	Cattaraugus County, NY	Project is located on 144 acres includes a 25-lot subdivision, 24 lots are single family residential lots; a 10- acre parcel will be reserved as a community area.	Pipeline, Cattaraugus County, NY	8 miles	Under review	Planning	Land Use and Visual Resources, Socioeconomics

TABLE G-2 (cont'd)

Existing or Future Non-jurisdictional Projects Evaluated for Potential Cumulative Impacts

Project or Development	Location	Project Description	Nearest Facility Location	Approximate Distance from Project Right-of-Way	Permitting Status	Date of Construction Activities	Impacted Resources
Clarence Senior High School	Erie County, NY	Replacement of the existing baseball and softball fields including the installation of synthetic turf with a under drainage system at Clarence High School.	Pipeline, Erie County, NY; Porterville Compressor Station & EMP-03; Pendleton Compressor Station	12 miles	Under review	Unknown; Application Completed September 2015	Water Resources, Vegetation/Fisheries/Wildlife, Socioeconomics
Sharma Medical Office Park	Erie County, NY	Project for the construction of a medical office park consisting of approximately 62,500 square feet of office space at the intersection of Southwestern Blvd and Pleasant Ave in the Town of Hamburg.	Pipeline, Erie County, NY	15 miles	Under review	Unknown; Application Completed November 2015	Water Resources, Vegetation/Fisheries/Wildlife, Socioeconomics
Coudersport Flood Protection Project	Potter County, PA	Project to modify existing debris basin located at existing Coudersport Flood Protection Project along Mill Creek.	Pipeline, McKean County, PA	19 miles	Under review	Unknown; Application Completed November 2015	Water Resources, Vegetation/Fisheries/Wildlife
Berenfield Containers Inc. Metal container manufacturing facility	Warren County, PA	Project proposes construction of a metal container manufacturing facility. Emissions from spray booths will be controlled by fiber filter pads. A recuperative thermal oxidizer will be used to control VOC emissions from the curing process.	Pipeline, McKean County, PA	35 miles	Under review	Unknown; Approval Extension August 2015	Water Resources, Vegetation/Fisheries/Wildlife
Home Gilmore Lodge Redevelopment	Niagara, Ontario, Canada	Replacement or redevelopment of existing long term care facility, Gilmore Lodge, in the Town of Fort Erie.	Wheatfield Dehydration Facility	>10 miles	Proposed	Future	Water Resources, Vegetation/Fisheries/Wildlife
Transportation Projects							

TABLE G-2 (cont'd)

Existing or Future Non-jurisdictional Projects Evaluated for Potential Cumulative Impacts

Project or Development	Location	Project Description	Nearest Facility Location	Approximate Distance from Project Right-of-Way	Permitting Status	Date of Construction Activities	Impacted Resources
First Buffalo River Marina	Erie County, New YY	Project to relocate and upgrade winter moorings facility located on the First Buffalo River Marina property. The proposed facility will be relocated approximately 1,050 feet north of the existing facility.	Wheatfield Dehydration Facility	14 miles	Approved	Anticipated In-service June 2016	Water Resources, Vegetation/Fisheries/Wildlife, Socioeconomics
Group 2-16-STS State Routes 1002, 6, 646, 219 Project ID 104649	McKean County, PA	Highway resurfacing project.	Pipeline, McKean County, PA	0 mile	Permitted	Under Construction 2016; Estimated Completion October 2016	Soil and Geology, Water Resources, Vegetation/Fisheries/Wildlife, Threatened and Endangered Species, Land Use and Visual Resources, Socioeconomics, Air Quality, Noise
Ostrander Hollow Bridge Replacement	McKean County, PA	Bridge Replacement located in McKean County Liberty Township State Route 6 over Ostrander Hollow.	Pipeline, McKean County, PA	2.8 miles	Permitted	Under Construction 2016; Estimated Completion November 2016	Water Resources, Vegetation/Fisheries/Wildlife, Threatened and Endangered Species, Land Use and Visual Resources, Socioeconomics
Clermont to Rich Valley Pipeline Project	McKean and Cameron Counties, PA	Project to construct, operate, and maintain the Clermont to Rich Valley Pipeline Project, which consists of one 12-inch-diameter gas line and one 16-inch-diameterwaterline-natural gas lines.	Pipeline, McKean County, PA	6.7 miles	Permitted	Recently Completed	Water Resources, Vegetation/Fisheries/Wildlife, Land Use and Visual Resources, Socioeconomics
Gas line crossing State Route 0770 and Minard Run	McKean County, PA	Project to install and maintain a 6-inch-diameter SDR 11 PVC casing with a 4-inch-diameter SDR 11 PVC natural gas pipeline.	Pipeline, McKean County, PA	8 miles	Under review	Unknown; Application Completed November 2014	Water Resources, Vegetation/Fisheries/Wildlife, Land Use and Visual Resources, Socioeconomics
Goodrich Road Reconstruction Project	Erie County, NY	Proposed project includes milling and resurfacing of Goodrich Road from County Road to Lapp Road and full reconstruction of Goodrich Road from Lapp Road to Black Creek.	Wheatfield Dehydration Facility	9 miles	Under review	Unknown; Application Completed October 2015, Preliminary Approval	Water Resources, Vegetation/Fisheries/Wildlife, Land Use and Visual Resources, Socioeconomics

TABLE G-2 (cont'd)

Existing or Future Non-jurisdictional Projects Evaluated for Potential Cumulative Impacts

Project or Development	Location	Project Description	Nearest Facility Location	Approximate Distance from Project Right-of-Way	Permitting Status	Date of Construction Activities	Impacted Resources
Bailey Ave Bridges Over Cazenovia Creek & Buffalo River	Erie County, NY	The project involves the realignment of Bailey Avenue and the removal and replacement of two structurally deficient bridges. The two bridges over Cazenovia Creek and the Buffalo River will be constructed on an altered alignment. Approximately 820 feet of disturbed shoreline will be restored.	Pipeline, Erie County, NY; Porterville Compressor Station	13 miles	Proposed	Planning	Water Resources, Vegetation/Fisheries/Wildlife, Socioeconomics
Kinzua Valley Trail Allegheny National Forest	McKean County, PA	To develop a 2.5-mile recreational trail from Red Bridge to Markham Run along Kinzua Creek in the Allegheny National Forest and a new trail head parking area. The project proposes improvements to 1.6 mile of existing abandoned railroad grade and creation of 0.6 mile of new trail to connect to existing facilities.	Pipeline, McKean County, PA	19 miles	Under review	Unknown; Regulatory Review November 2014	Water Resources, Vegetation/Fisheries/Wildlife, Socioeconomics
Additional Projects Considered for Air Quality Impacts							
Ashland Advanced Materials	Niagara County, NY	Manufacture of carbon and graphite engineer materials.	Pendleton Compressor Station	9.5 miles	Permitted	Unknown; Operating State Permit	Air Quality
Buffalo Sewer Authority - Bird Island STP	Erie County, PA	Wastewater treatment plant.	Pendleton Compressor Station	14 miles	Permitted	Unknown; Operating State Permit	Air Quality
CWM Chemical Services, LLC	Niagara County, NY	Hazardous waste treatment, storage, disposal, and recovery.	Pendleton Compressor Station	11.5 miles	Permitted	Unknown; Operating State Permit	Air Quality
Durez Corporation	Niagara County, NY	Manufacture of phenolic resins.	Wheatfield Dehydration Facility	4.2 miles	Permitted	Unknown; Operating Title V Permit	Air Quality

TABLE G-2 (cont'd)

Existing or Future Non-jurisdictional Projects Evaluated for Potential Cumulative Impacts

Project or Development	Location	Project Description	Nearest Facility Location	Approximate Distance from Project Right-of-Way	Permitting Status	Date of Construction Activities	Impacted Resources
Engineered Composites, Inc.	Erie County, PA	Manufacture of fiberglass plastic parts.	Pendleton Compressor Station	16.5 miles	Permitted	Unknown; Operating Title V Permit	Air Quality
General Motors – Tonawanda Engine Plant	Erie County, PA	Production of automobile engines.	Wheatfield Dehydration Facility	8 miles	Permitted	Unknown; Operating Title V Permit	Air Quality
Lockport Cogeneration Facility	Niagara County, NY	Steam and electricity co-generator.	Pendleton Compressor Station	4.5 miles	Permitted	Unknown; Operating Title V Permit	Air Quality
Metaullics Systems Division of Pyrotek, Inc.	Niagara County, NY	Manufacture of graphite, carbon, and ceramic products.	Wheatfield Dehydration Facility	3.75 miles	Permitted	Unknown; Operating Title V Permit	Air Quality
Mod-PAC Corporation	Erie County, PA	Commercial printing facility.	Wheatfield Dehydration Facility	9.75 miles	Permitted	Unknown; Operating State Permit	Air Quality
NOCO Energy Corp	Erie County, PA	Petroleum and chemical bulk storage terminal.	Wheatfield Dehydration Facility	6.25 miles	Permitted	Unknown; Operating Title V Permit	Air Quality
Redland Quarries NY, Inc.	Niagara County, NY	Production of crushed limestone and asphalt paving products.	Wheatfield Dehydration Facility	4 miles	Permitted	Unknown; Operating State Permit	Air Quality
TAM Ceramics, LLC	Niagara County, NY	Manufacture of refractory mixtures and ceramic powder.	Wheatfield Dehydration Facility	6.5 miles	Permitted	Unknown; Operating Title V Permit	Air Quality
Vandemark Chemical, Inc.	Niagara County, NY	Chemical manufacturing.	Pendleton Compressor Station	7.5 miles	Permitted	Unknown; Operating Title V Permit	Air Quality
Washington Mills Electro Minerals	Niagara County, NY	Manufacture of abrasives materials.	Wheatfield Dehydration Facility	5.75 miles	Permitted	Unknown; Operating Title V Permit	Air Quality
Yahoo! Lockport Facility	Niagara County, NY	Data center.	Pendleton Compressor Station	5 miles	Permitted	Unknown; Operating State Permit	Air Quality

20160727-4003 FERC PDF (Unofficial) 07/27/2016

Document Content(s)

Northern_Access_2016_Project_Environmental_Assessment_CD.PDF.....1-487