Previously:
F-2018-1107 PCCR
F-2016-0397 WDR
S-2016-0031

TABLE OF CONTENTS

Agency Submittal Information

Section I
Project Narrative

Section II
New York District United States Army Corps of Engineers
Joint Permit Application
Environmental Questionnaire
EFH Worksheet

Section III
New York State Department of Environmental Conservation
Short Environmental Assessment Form
Environmental Remediation Database Forms
DEC Supplemental D-2
Permission to Inspect Form

Section IV
New York State Department of State Coastal Management Program
Federal Consistency Assessment Form
FCAF Supplemental

Section V
Site Photos

Section VI
Location Maps, Charts and Diagrams

Section VII
Drawings

Section VIII
Supplement

Agency Submittals

Attention: Regional Permit Administrator
New York State Department of Environmental Conservation (NYSDEC)
NYS DEC Region 3
21 South Putt Corners Road
New Paltz, NY 12561
(845) 256-3000
(1 Copy)

Attention: Western Permits Division - Regulatory Branch
U.S. Army Corps of Engineers, New York District Office (USACE)
26 Federal Plaza, Room 1937
New York, NY 10278-0090
(917) 790-8511
(2 Copies)

Attention: Consistency Review Unit, Office of Planning and Development
New York State Department of State (NYSDOS)
99 Washington Ave, Suite 1010
One Commerce Place
Albany, NY 12231-00001
(518) 474-6000
(1 Copy)

Attention: Bureau of Land Management
New York State Office of General Services (OGS)
39th Floor Corning Tower, Empire State Plaza
Albany, NY 12242
(518) 474-2195
(1 Copy)

PROJECT NARRATIVE

1. Introduction:

TMS Waterfront, LLC. (TMS) has prepared this Joint Permit Application (JPA) on behalf of the Applicant, Breakers Stony Point, L.P., for the proposed shoreline development at 36 Hudson Drive, Stony Point, New York. The Applicant proposes to construct a public fishing pier, remove an existing timber bulkhead, and construct a rip rap revetment and public esplanade along the Hudson River shoreline.

This application requests approval for a Nationwide Permit #13 (Bank Stabilization) from the U.S. Army Corps of Engineers (USACE), Protection of Waters (Excavation and Fill) and Water Quality Certification permits from the New York State Department of Environmental Conservation (NYSDEC), and a Coastal Consistency Concurrence from the New York State Department of State (NYSDOS).

2. Site Location and Description:

The project is located at 36 Hudson Drive, approximately 600 feet north of the intersection with Tomkins Avenue in the town of Stony Point, Rockland County, New York, along the west bank of the Hudson River. The Site is located in the southeastern portion of the Town of Stony Point along the Hudson River waterfront. The Site adjoins the CSX Railroad right-of-way to the west and Palisades Interstate Park Commission property, occupied by the Stony Point Battlefield and Lighthouse Historic Site, to the north. The general location is shown in Figure 1 below; the total Site area is approximately 41 acres, which consists of 17.2 acres land area, 4.1 acres wetlands, and 20.6 acres of land under water. The Site is currently occupied by the Stony Point Marina.

Latitude:	41° 14' 7.64" N
Longitude:	73° 58' 31.07" W

The following permits are existing at the site:

- (10/16/2019) NYSDEC ID No. 3-3928-00061/00021 (Excavation & Fill) and 3-3928-00061/00022 (Water Quality Certification);
- (9/4/2019) USACE Permit No. NAN-2018-01496-WOR (NWP #3);
- (8/31/2006) DEC Permit ID: 3-3928-00061/00015 (Breakwater replacement);
- (5/26/1993) USACE Permit No. 88-1662 (Marina expansion); and
- (5/23/1985) USACE Permit No. 13587 (Original marina construction).

However, for the scope of this work, none of these permits nor any prior permits have been issued.

A Draft Environmental Impact Statement (DEIS) for the combined upland mixed-use development and waterside improvements was completed by the Stony Point Planning Board (Lead Agency) and submitted to the appropriate recipients on December 11, 2019, including the USACE, NYSDEC, and NYSDOS. This permit and narrative include a large portion of the information therein, but are an expansion of that initial investigation with an emphasis on the esplanade, shoreline, and pier construction.

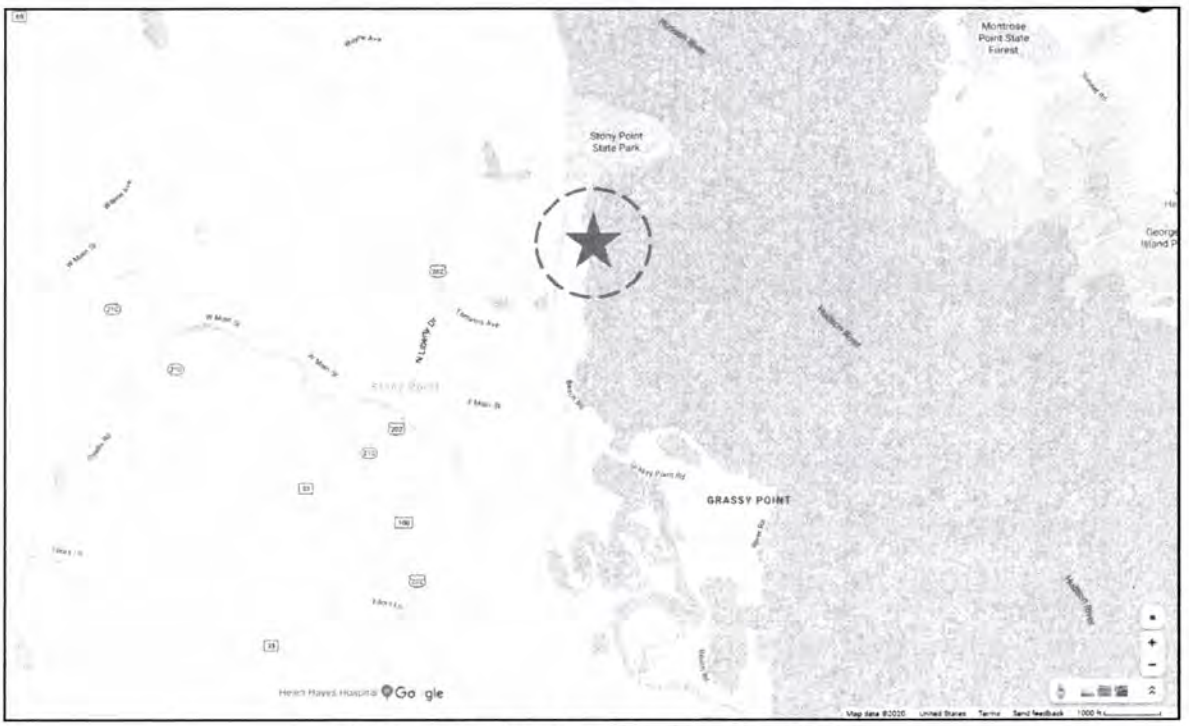

Figure 1: Project location (Source: USGS).

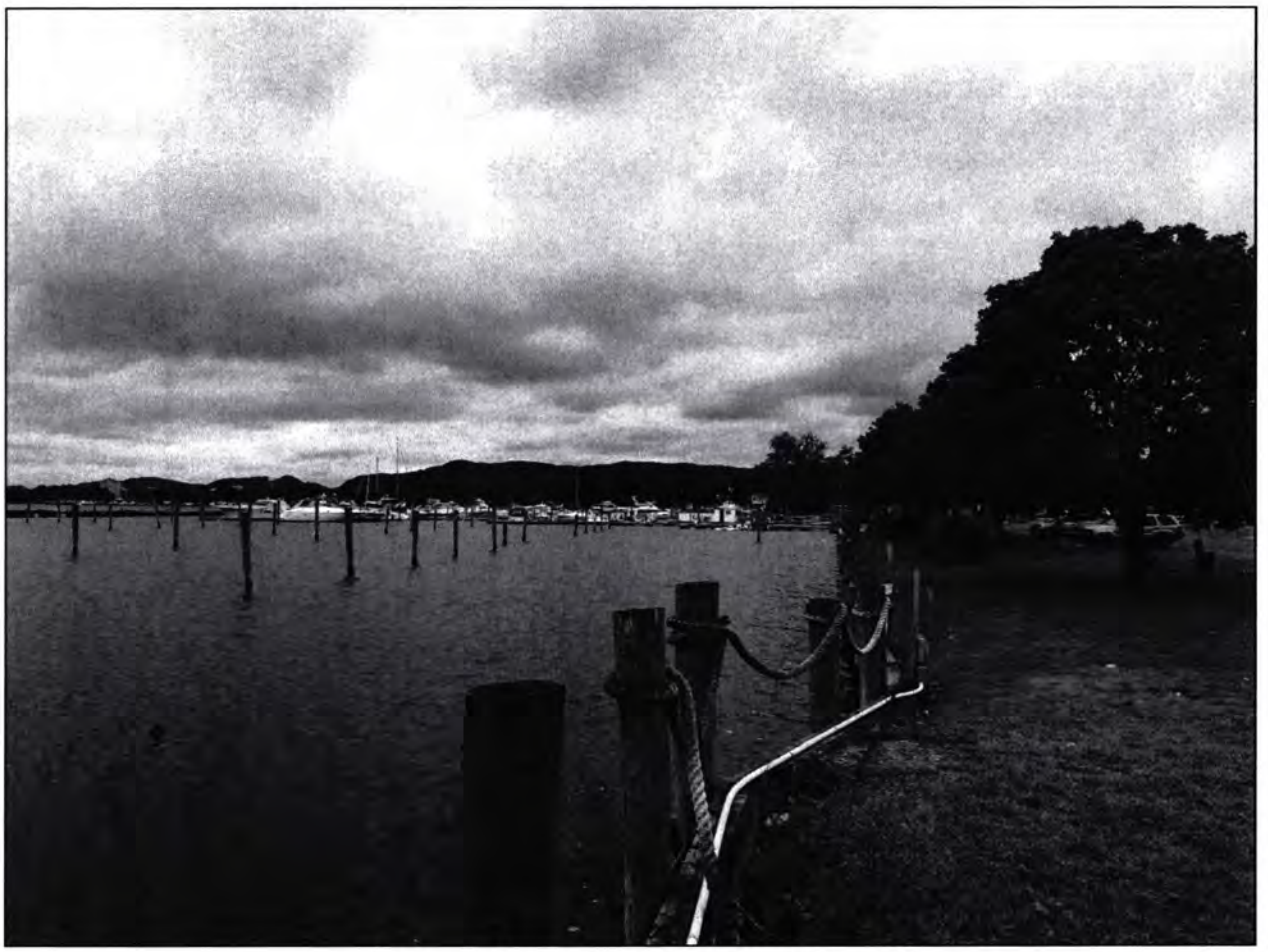

Figure 2: Existing shoreline – Facing south.

3. Project Purpose and Need

The Hudson River shoreline is currently composed of a timber bulkhead, constructed in 1985 during the original construction of the Stony Point Marina. The bulkhead extends approximately 1,400 linear feet of the waterfront and is broken up by one concrete boat access ramp. To the north of the Site is a 4.1-acre preserved wetland, and to the south is another marina. The Site currently operates as a marina and contains two main docks, providing 94 boat slips. Upland, the Site is currently occupied by various industrial buildings and boat yards, used for offices, boat repair, and storage.

The proposed pier and shoreline work are to be constructed in coordination with the upland site development at the Site, which is described fully in the DEIS (submitted in December 2019). Both waterfront features will provide public access to the waterfront.

The Stony Point Battlefield and Lighthouse adjoining the Site to the north are on the National

Register of Historic Places. The State Historic Preservation Office (SHPO) issued a letter of No Adverse Effect on February 6, 2019 of the proposed plan on the historic Stony Point Battlefield. This letter is included in the DEIS, previously provided.

4. Description of Proposed Action

Shoreline

The existing bulkhead along the shoreline will be removed and approximately 2,625 cubic yards of backfill will be excavated from behind the bulkhead. The bulkhead will be completely replaced with a planted rip rap revetment and will result in a reduction of coverage and fill in the Hudson River. Following removal of the existing bulkhead, the shoreline will be graded to the designed shape, with the toe of the revetment at the bulkhead line. The revetment will be constructed at a 1:1.5 (V:H) slope, with a backfilled toe below MHW consisting of a geotextile fabric base, a 6-inch layer of ¾ inch crushed stone, a 6-inch layer of 3-inch stone, and a 2.5-foot thick layer of 12-inch to 24-inch armor stone (refer to the Drawings in Section VIII). Work on the seawall will be conducted from land and at low tide in order to minimize disruption or impacts to water quality. Three tidal pools, which will fill with water at high tide and contain it when the tide goes out, will be built into the revetment, providing further space for ecological development and an improved aesthetic.

A quarter-mile long, 20-ft wide esplanade will be constructed at the crest of the revetment and will be open to the public and include benches, pavilions, and access to the public fishing pier. The esplanade is detailed in the DEIS and upland design packages and, although it will be constructed to tie together the upland development and shoreline work, it is independent of the waterfront work addressed in this permit package.

On the northern edge of the Site is a 4.1-acre freshwater wetland, regulated by the DEC. The current landscape of the site encroaches upon the 100-ft adjacent area buffer, and the Applicant proposes to remove all materials encroaching upon the area – a 1,500 square-foot section of a concrete pad – as part of the project. The affected area will be replanted and the native and non-invasive species will be incorporated into plantings close to the river. These plantings will provide for adaptation, flood and sea level rise resiliency, and biodiversity enhancement. Erosion control structures will be removed within 30 days of final stabilization to avoid impeding migratory patterns. The freshwater wetlands will not be disturbed by the proposed action; all clean-up work will occur in the adjacent area and proper best management practices will prevent construction from impacting the wetlands. The proposed site grading and

Stormwater Pollution Prevention Plan will result in keeping the majority of stormwater on site.

Pier
A fixed, timber pier is proposed to provide public access to the Hudson River for fishing or observation. The pier will be 220 ft long by 8 ft wide, with two, 12-inch diameter, timber piles located at 8-ft intervals. Two widened observation areas will be constructed along the length, measuring 16 ft wide and 22 ft long, complete with bench seating and added space for fishing from the pier. The end of the pier will be a 25 ft by 25 ft observation area covered with a pavilion which will again be outfitted with benches and allow added space for fishing from the. Pile driving and capping will be done using a small crane mounted on a floating barge. Dockbuilder and carpenter work will be executed from the barge and added scaffolding affixed to the previously completed pile bents.

5. Engineering and Construction Discussion:

Shoreline restoration with a riprap revetment uses armor stone to shape the shoreline and prevent erosion from waves and currents. First, excavation begins on the landward side of the existing timber bulkhead; the bulkhead is braced so it can remain in place during construction to prevent erosion. Then the existing shoreline is graded to form a base for the revetment. A turbidity curtain will be installed beyond the toe of the wall to prevent sediments stirred up by the excavator from dispersing into the river. Then, a layer of geotextile filter fabric is laid down followed by a layer of bedding stone. Bedding stones are typically 3 in. or smaller in size. These layers provide erosion control and filtration/separation from the base materials and groundwater percolation. Riprap armor stones are laid on top of the bedding stone. The riprap armor stones are much larger than bedding stones. Although stones are typically larger than 12 in., the size of the stone is determined by the intensity of current and wave actions acting on the revetment. Larger and heavier stones are required as wave and currents become stronger. The size of the armor stones will be determined in the detailed design phase.

Riprap can form slopes as steep as 1.5:1. Natural slopes with vegetation are often designed as 2:1 or shallower. Steeper slopes minimize the horizontal width of the shoreline, leaving more space available for programming at the site. But as the shoreline becomes steeper and even vertical, waves will break harder and impose larger impact energies on the shoreline. The proposed revetment will be a compromise of preserving the width of the shoreline while also mitigating the impact energies from waves and currents. Riprap revetments deflect wave energies seaward but also absorb a portion of those energies in their voids, which in turn lessens the turbidity from deflected waves when compared to hard line bulkheads; the proposed revetment will be more resilient than a natural shoreline, but less impactful than the existing timber bulkhead.

The pier design meets the requirements for berthing, minimizes shading, and is designed with consideration of the ASCE 24-14 guidance, *Flood Resistant Design and Construction*. For construction, piles will be installed by a crane aboard a small work barge. Piles will be installed using vibratory methods unless substrate conditions prohibit this method. If this occurs, piles will be drilled. Turbidity curtains will be used around the work area to minimize impacts caused by any temporary increases in turbidity due to construction. Pile locations will be laid out ahead of time to mark driving points. All work requiring machinery will be performed via the working barge.

5.1. Schedule: It is anticipated that the tasks detailed above, specifically the major tasks, will have the following durations:

- Timber bulkhead removal – 14 days.
- Stone revetment construction – 21 days.
- Pile installation for timber pier – in-water - 8 weeks, includes framing and driving 4 piles a day. Active driving is estimated to be 1 hour per day with the rest of the time dedicated to material handling and alignment.
- Timber pier construction – 30 days.
- Site restoration and demobilization – 8 days.

5.2. Best Management Practices (BMPs) - Soil and Erosion Control

- Due to the depth of the work, high currents, and excavation behind the existing bulkhead, there is not expected to be an increase in turbidity due to the pier or shoreline work. Construction will cease should a noticeable increase in turbidity occur until adequate best management practices (BMPs) are deployed to contain the work area.
- As needed, turbidity curtains will be installed around the work areas to minimize turbidity in adjacent areas.
- Revetment construction work will be completed at low tide, which will reduce the potential for impacts relating to this work. Construction will cease should a noticeable increase in turbidity occur outside the BMPs; BMPs will be inspected and modified if needed.
- Any increase in turbidity or other impacts within the BMPs will be moderate, controlled, and temporary.
- SWPPP controls on the barge for pile driving will be implemented and followed.
- SWPPP controls for the revetment will be implemented upland and will include measures including hay bales or silt fences to manage stormwater.

- Construction debris will be collected and disposed of in approved off-site waste disposal areas.

5.3. Best Management Practices - Environmental Protection

- Work will adhere to all required environmental moratoriums.
- Construction debris will be tested for contamination, and any contaminated material will be disposed of as required in the remediation plan.
- Barges and equipment will be protected against spills into the waterway.
- A spill kit will be on site should any spill occur.
- Construction equipment will not work waterward of MHHW unless on floating platforms that cannot ground out.
- Care will be exercised to prevent any debris from dropping into the waterway by use of portable spill plates during active unloading operations. Any materials dropped shall be removed immediately and legally disposed of.
- All seasonal moratoriums will be adhered to and work will stop should it not be completed when they begin.

5.4. Equipment

- The Contractor will utilize a floating pile driver on site to install the piles. This will be mounted on a barge for ease of access.
- Other equipment will include a materials barge, compressors, and a vibratory hammer.
- Revetment work will be completed using an excavator based on shore.

6. Project Impacts and Mitigation

6.1. Impact on Land – The proposed work will remove the existing timber bulkhead from 1,400 linear feet of the shoreline and replace the bulkhead with a stone rip rap revetment. The toe of the revetment will be at the base of the existing bulkhead and the revetment will extend landward at a 1:1.5 slope, resulting in a net cut of land along the Hudson River shoreline. The sloped revetment will benefit the shoreline and land by providing structural support, slowing wave energy, and reducing erosion impacts. Negative impacts to land for the seawall work will be limited to temporary soil erosion and disturbance during construction. This impact will be minimized using storm water management practices (hay bales, silt fence, and turbidity curtains) and the waterfront area will be restored after construction. No impacts to land due to the timber pier are anticipated.

There will be no site disturbance within 100 feet of the freshwater wetlands, apart from removing the existing concrete pad that currently encroaches upon the 100' buffer area and restoring the disturbed area. No development or disturbance will occur in the wetlands. With the implementation of the soil erosion and sediment control measures, no impacts are anticipated. The proposed development is anticipated to disturb approximately 3.06 acres of the project site.

The measures outlined in the Site's Stormwater Pollution Prevention Plan (SWPPP) will reduce soil erosion from areas exposed during construction and prevent silt from reaching the wetland area and the Hudson River. All soil erosion and sediment control practices will be installed in accordance with erosion and sediment control best management practices recommended by the NYSDEC and integrated into the Erosion Control Plan. Temporary and permanent stabilization methods will be implemented before construction begins and will be continuously modified throughout the project to provide the best management practices for stormwater management and pollution prevention. Existing vegetated areas bordering the Haverstraw Bay will be maintained and, where possible, restored to provide bank cover, soil stabilization, improve water quality and provide buffer areas.

6.2. Impact on Water - The project site involves construction along the Hudson River. Short term impacts caused by pile driving may include increased turbidity, which will most likely not be observable due to the depth of water at the site and will be additionally minimized by using turbidity curtains. Long term impacts to habitat may result from shading, which will be minimized by reducing the dimensions of the pier as much as practicable.

Fill will be generated by the piles used to support the pier. In-water work due to the seawall reconstruction will be limited and temporary. There are no discharges, effluents, or additional in-water structures proposed as part of this work. Removal of the existing bulkhead may have temporary, localized impacts on water due to erosion and silt/stone exposure to the river. Open excavation below MHW elevation will not be left overnight and will be scheduled around tidal fluctuations to minimize exposure. The volume of material that will be removed and restored below the MHW and Spring High Tide lines are described in the tables below.

6.2.1. **Coverage:**

Description	Coverage Over MHW (SF)	Coverage Over SHT (SF)
Shoreline	- 14,546	- 13,664
Pier	+ 2,444	+ 2,460
Total	- 12,102	- 11,204

6.2.2. **Cut/Fill:**

Description	Fill Below MHW (CY)	Fill Below SHT (CY)
Shoreline	- 1,261 (cut)	- 1,460 (cut)
Pier (Piles)	+ 61 (fill)	+ 62 (fill)
Total	- 1,200	- 1,398

6.2.3. **Piles**

Description	Pile Use	Quantity of Piles
12-inch diameter, timber	Fixed timber pier	72

6.3. Impact on Air – This project will add no industrial equipment (stationary) that produces emissions. The material handling equipment will meet New York State requirements for non-road construction equipment emissions. The project will not impact air.

6.4. Impacts on Transportation – The project will improve the water and land connection and enable more people to have boats and other vessels on the Hudson River. The facility is located outside the navigational waterway and will not affect vessel traffic in the Hudson River.

6.5. Impact on Energy – The project will meet or exceed the requirements of NYS Energy Conservation Construction Code, and the waterfront work will have no impact on local energy sources, as the project includes no electrical conveyance.

6.6. Impact on Plants and Animals and Significant Habitats – According to the NYSDEC Natural Heritage Program (NHP) there are two known bald eagle nests within 0.2 miles of the site, at the Stony Point Battlefield/Lighthouse site which is directly north of the project Site. Since the project area is already developed, with no forested areas, it does not provide suitable nesting habitat for Bald Eagles. The disturbed nature of the marina area, both intertidal and subtidal, together with high turbidity, limits the potential for aquatic vegetation and no aquatic vegetation has been observed in the area. Additionally, the NYSDEC NHP report states that the Shortnose Sturgeon and Atlantic Sturgeon have been documented in the Hudson River and so could occur near the project site. Please see the attached Essential Fish Habitat (EFH) Assessment form and Short Environmental Assessment Form (EAF).

Extensive submerged aquatic vegetation beds have been historically mapped in the area of the marina. These areas provide critical habitat to many juvenile species of fish, crustacea, and bay scallops. Absence of SAV at the project site was confirmed by visual assessments completed by TMS Waterfront and the Applicant in 2018. Therefore, since

no SAV is currently present, no impacts to SAV will occur as a result of this project. Shading caused by the pier is roughly 2,460 square feet, but the narrow width of the will minimize any permanently shaded areas.

Development of the Eagle Bay site will require demolition and removal of existing structures. Shoreline structures, such as bulkheads, can alter habitat by modifying biological resources and habitat structure causing cumulative ecological effects and changing physical ecological processes. Wave action and reflection off bulkheads can cause sand scour immediately seaward of the bulkhead. These disturbances cause fish to flee the area and/or reduce or suspend feeding. The structures to be demolished and removed are old timber structures, dating from when creosote was likely utilized for preservation. This represents improvement of habitat via removal of this toxic substance. Temporary impacts to Shortnose Sturgeon habitat from the proposed action are possible as a result of the bulkhead demolition, revetment construction, and pier construction, through the concentration of these activities within the footprint of the existing marina and the use of best management practices will minimize the extent of impacts.

Figure 3: Mapped Submerged Aquatic Vegetation in the project vicinity (DEC, 2018).

6.7. Impact on Aesthetic Resources - No significant change to the visual character is anticipated from the perimeter of the site, from local roads, surrounding historic sites or from other publicly accessible locations. The mixed-use development will introduce water enhanced uses, upgrade the site's aesthetic appearance, and revitalize the Stony Point waterfront area by creating a vibrant riverside community with a public esplanade and pier. The site aesthetics include an architectural design that complements the nautical history of the area and provides an integrated site character. The site design will be consistent with the NY State Coastal Management Program and the Stony Point Local Water Revitalization Plan which enable economic development of a community while advancing the preservation of ecological, cultural, historic, recreational, and aesthetic values. None, due to project location, ownership, and adjacent properties.

6.8. Impact on Open Space and Recreation – None.

6.9. Impact on Historic and Archeological Resources – Results of the archeological studies completed for the DEIS show that no archaeological resources are present on the property and that the property does not have the potential for containing evidence of prehistoric occupation or use. The Stony Point Battlefield and Lighthouse Historic Site are located to the north of the site, both of which are on the National Register of Historic Places and are the only historic resources in the project vicinity. The site also has a Hudson Valley National Heritage Area designation. However, the site development will not have nay impact on archeological or historical resources.

6.10. Noise and Odor Impact – Increases in noise level are temporary and will last only while the project is being constructed. However, mitigation measures are proposed during construction to limit the dispersal of particulate matter. The construction staging area will be established to mitigate impacts from construction. The primary construction entrance will be via Hudson Drive. Noise impacts from project installation and operation considered to be temporary and negligible, as there are such limited resources in the project area that risk exposure.

Noise from vessels, construction equipment, and pile driving has the potential to temporarily displace resident fish. However, noise from this project is expected to be limited to a total of 3 months.

7. <u>Alternatives Analysis</u>

The summary of the alternatives evaluation is described below. As identified above, in the EFH Assessment in Section II, the Short EAF Form in Section III, and the FCAF form in Section IV, the impacts are not deemed to be significant on this site. The primary reason is that the project proposes historically similar operations on site to those that have been previously permitted. Moreover, the proposed revetment removes fill from the waterway and aids in the

extension of the overall life cycle and reduction of maintenance periods, thereby requiring fewer replacements, major overhauls, and construction time on site.

7.1. Shoreline Alternatives

7.1.1. **No Action –** Under a No Action alternative, the shoreline would not be stabilized for the proposed upland development and no tidal habitat would be created. In addition, the tidal wetland adjacent area would remain as is, continuing to be partially covered by a deteriorating concrete pad. Thus, the No Action alternative does not achieve the project's goals and is more environmentally damaging than the proposed project in the long-term.

7.1.2. **Sheet Pile Bulkhead –** With a sheet pile alternative, the shoreline would be stabilized by constructing a new steel sheet pile bulkhead in a roughly linear arrangement along the existing shoreline. Sheet pile bulkheads, in general, offer less storm resiliency and natural habitat compared to the revetment shoreline approach. In addition, what little habitat value the existing shoreline provides will be lost under this alternative. No new open water, wetland or upland habitat would be constructed other than small vegetated and managed upland landscape planting areas within the shore public walkway.

7.1.3. **Vegetated Embankment** – With a vegetated embankment alternative, the existing shoreline would be replaced with a vegetated wetland on a gentle slope, about 1:4 (V:H), along the entire shoreline. There is insufficient width of land to do this and meet the project's objectives without expanding into the Hudson River, which would result in added fill in the waterway.

7.2. Pier Alternatives

7.2.1. **No Action –** No action would not boost the access to the waterfront for the public. The pier is intended for nature observation, fishing, community events, and other waterfront recreational activities as they may fit.

7.2.2. **Construction with Steel Pipe Piles –** Pipe piles would result in less fill and coverage added during this phase of work, but the aesthetic would severely suffer. The rest of the in-water structures at the site are constructed of timber, including all of the piles. The pier is designed to match the material properties and color of the docks and breakwater; the same timber structural members and composite decking are part of the design of both. Additionally over time, the piles would rust and further worsen the aesthetic of the pier.

7.2.3. **Construct Pier without Gazebo –** The gazebo is incorporated to facilitate pedestrians by offering shade and weather protection when utilizing the pier. The inclusion of

the gazebo allows for the pier to be functional in the rain or extremely sunny days by offering protection from the elements. The gazebo also allows for the installation of more lighting which will enable the gazebo to be used at night, dawn, or dusk as well as added navigational protection buy illuminating the end of the pier for passing boaters.

7.2.4. **Construct Narrower or Consistently Wider Pier –** The dimensions of the pier were chosen in an effort to limit added coverage above high tide while maximizing the usability of the pier. The 8 ft width is narrow enough as to not add excess shading, but comfortable for pedestrians to walk past each other. The two widened sections were included to allow for nature observation and fishing closer to shore and to provide benches for rest for those pedestrians who may need it.

8. Regulatory Compliance

The following approvals and permits for replacing the timber bulkhead with the rip rap revetment and constructing the timber public pier will be required.

State Environmental Quality Review (SEQR) Determination and Process: Based upon the preliminary scope of work, the Stony Point Planning Board declared the overall project a Type I action, and subsequently prepared a Draft Environmental Impact Statement (DEIS), which was submitted on December 11, 2019. The DEIS presents the overall project and associated impacts, including the upland mixed-use development as well as the waterfront work.

8.1. New York State Department of Environmental Conservation (NYSDEC): The following permits are anticipated to be required from the NYSDEC for the proposed waterfront work:

- Excavation and Fill in Navigable Waters
- Protection of Waters
- 401 Water Quality Certification
- Docks Moorings or Platforms

The purpose of the Protection of Waters Program is to "preserve and protect [New York] lakes, rivers, streams and ponds," and that "comprehensive planning is undertaken for the protection, conservation, equitable and wise use and development of the water resources of the state to the end that such water resources be not wasted and shall be adequate to meet the present and future needs for domestic, municipal, agricultural, commercial, industrial, power, recreational, and other public, beneficial purposes," (see ECL § 15-0105). The regulations adopted under these statutes are intended to effectuate these objectives, and thus are to be construed consistent with these legislative goals.

- For a Protection of Waters permit, an applicant needs to show that the proposed project:
  - Is reasonable and necessary;
  - Would not endanger the public health, safety or welfare; and
  - Would not cause unreasonable, uncontrolled or unnecessary damage to natural resources of the state.

In considering a proposal's consistency with the standards required by the applicable regulations, NYSDEC may, pursuant to 6 NYCRR §§ 608.7(b) (1)-(7), consider various factors in their approval, including:

- The environmental impacts of the proposal, including effects on
  - Aquatic, wetland and terrestrial habitats;
  - Water quality;
  - Hydrology; and
  - Water course and waterbody integrity (e.g., turbidity and sedimentation).
- The adequacy of design and construction techniques;
- Operational and maintenance characteristics;
- The safe commercial use of water resources;
- The water-dependent nature of a use;
- The safeguarding of life and property; and
- Natural resource management objectives and values.

As described in Section 7, Project Impacts and Mitigation, of this narrative, the proposed project satisfies the foregoing standards for issuance of the Protection of Waters permit. This permit application evaluates potential impacts of the proposed project on the habitats, water quality, and other state resources, and describes the design's consideration of construction, reduced maintenance, safe use and access to water resources and water-dependent activities, preservation of life and property, and conservation of resources, and has determined that the proposed work is reasonable and necessary and aligns with the current and future uses of the property and its surroundings.

8.2. U.S. Army Corps of Engineers (USACE): The USACE is responsible for the protection and management of the nation's waterways and wetlands. In reviewing projects, the USACE consults with other federal agencies including the U.S. Fish and Wildlife Service (FWS), the National Oceanic and Atmospheric Administration (NOAA), the U.S. Coast Guard (USCG).

- Nationwide Permit 3: Maintenance
- Nationwide Permit 13: Bank Stabilization

8.3. New York State Department of State (NYSDOS): This project will occur with the state's coastal area and is thus subject to the New York State Coastal Management Program

NEW YORK STATE | Department of Environmental Conservation | Office of General Services | Department of State

RECEIVED
JUL 07 2020
NYS Department of State
Planning and Development

US Army Corps of Engineers

JOINT APPLICATION FORM

For Permits for activities activities affecting streams, waterways, waterbodies, wetlands, coastal areas, sources of water, and endangered and threatened species.

You must separately apply for and obtain Permits from each involved agency before starting work. Please read all instructions.

1. **Applications To:**

>NYS Department of Environmental Conservation ☑ Check here to confirm you sent this form to NYSDEC.

Check all permits that apply:
- ☐ Stream Disturbance
- ☑ Excavation and Fill in Navigable Waters
- ☑ Docks, Moorings or Platforms
- ☐ Dams and Impoundment Structures
- ☑ 401 Water Quality Certification
- ☐ Freshwater Wetlands
- ☐ Tidal Wetlands
- ☐ Wild, Scenic and Recreational Rivers
- ☐ Coastal Erosion Management
- ☐ Water Withdrawal
- ☐ Long Island Well
- ☐ Incidental Take of Endangered / Threatened Species

>US Army Corps of Engineers ☑ Check here to confirm you sent this form to USACE.

Check all permits that apply: ☑ Section 404 Clean Water Act ☑ Section 10 Rivers and Harbors Act

Is the project Federally funded? ☐ Yes ☑ No

If yes, name of Federal Agency:

General Permit Type(s), if known:

Preconstruction Notification: ☐ Yes ☐ No

>NYS Office of General Services ☑ Check here to confirm you sent this form to NYSOGS.

Check all permits that apply:
- ☐ State Owned Lands Under Water
- ☐ Utility Easement (pipelines, conduits, cables, etc.)
- ☐ Docks, Moorings or Platforms

>NYS Department of State ☑ Check here to confirm you sent this form to NYSDOS.

Check if this applies: ☑ Coastal Consistency Concurrence

2. **Name of Applicant**: Breakers Stony Point, L.P.

Taxpayer ID (if applicant is NOT an individual):

Mailing Address: 5 Eastview Rd

Post Office / City: Monsey

State: NY

Zip: 10952

Telephone: (914) 403-8228

Email: eliherskowitz@gmail.com

Applicant Must be (check all that apply): ☑ Owner ☑ Operator ☐ Lessee

3. **Name of Property Owner (if different than Applicant)**

Mailing Address

Post Office / City

State

Zip

Telephone

Email

For Agency Use Only	Agency Application Number:

4. **Name of Contact / Agent**

TMS Waterfront

Mailing Address	Post Office / City	State	Zip
247 West 25th Street, 10N	New York	NY	10001

Telephone (917) 426-6788 Email shea@tms-waterfront.com

5. **Project / Facility Name**

Eagle Bay

Property Tax Map Section / Block / Lot Number: 15.04-6-3 & 15.06-6-4

Project Street Address, if applicable	Post Office / City	State	Zip
36 Hudson Drive	Stony Point	NY	10980

Provide directions and distances to roads, intersections, bridges and bodies of water

Hudson Drive is immediately to the South. The Hudson River borders the East side of the site. The CSX railroad borders the West side of the site. The Stony Point State Park borders the North side of the site.

☑ Town ☐ Village ☐ City

Town	County	Stream/Waterbody Name
Stony Point	Rockland	Hudson River

Project Location Coordinates: Enter Latitude and Longitude in degrees, minutes, seconds:

Latitude: 41 ° 14 ' 7 " Longitude: 78 ° 53 ' 32 "

6. **Project Description:** Provide the following information about your project. Continue each response and provide any additional information on other pages. **Attach plans on separate pages.**

a. Purpose of the proposed project:

See attached narrative.

b. Description of current site conditions:

See attached narrative.

c. Proposed site changes:

See attached narrative.

d. Type of structures and fill materials to be installed, and quantity of materials to be used (e.g., square feet of coverage, cubic yards of fill material, structures below ordinary/mean high water, etc.):

See attached narrative.

e. Area of excavation or dredging, volume of material to be removed, location of dredged material placement:

Not applicable.

f. Is tree cutting or clearing proposed? ☐ Yes If Yes, explain below. ☑ No

Timing of the proposed cutting or clearing (month/year):

Number of trees to be cut: Acreage of trees to be cleared:

g. Work methods and type of equipment to be used:

See attached narrative.

h. Describe the planned sequence of activities:

See attached narrative.

i. Pollution control methods and other actions proposed to mitigate environmental impacts:

See attached narrative.

j. Erosion and silt control methods that will be used to prevent water quality impacts:

See attached narrative.

k. Alternatives considered to avoid regulated areas. If no feasible alternatives exist, explain how the project will minimize impacts:

See attached narrative.

l. Proposed use: ☑ Private ☑ Public ☐ Commercial

m. Proposed Start Date: 09/01/2021 Estimated Completion Date: 10/31/2021

n. Has work begun on project? ☐ Yes If Yes, explain below. ☑ No

o. Will project occupy Federal, State, or Municipal Land? ☐ Yes If Yes, explain below. ☑ No

Stony Point Marina is on Private lands including those owned underwater.

p. List any previous DEC, USACE, OGS or DOS Permit / Application numbers for activities at this location:

DEC ID 3-3928-00061/00021
DEC ID 3-3928-00061/00022
USACE NAN-2018-01496-WOR

q. Will this project require additional Federal, State, or Local authorizations, including zoning changes?

☑ Yes If Yes, list below. ☐ No

The public esplanade and pier are a distinctive and separate part of the overall project, which will require local zoning changes. See attached narrative.

7. **Signatures.**
Applicant and Owner (If different) must sign the application.
Append additional pages of this Signature section if there are multiple Applicants, Owners or Contact/Agents.

I hereby affirm that information provided on this form and all attachments submitted herewith is true to the best of my knowledge and belief.

Permission to Inspect - I hereby consent to Agency inspection of the project site and adjacent property areas. Agency staff may enter the property without notice between 7:00 am and 7:00 pm, Monday - Friday. Inspection may occur without the owner, applicant or agent present. If the property is posted with "keep out" signs or fenced with an unlocked gate, Agency staff may still enter the property. Agency staff may take measurements, analyze site physical characteristics, take soil and vegetation samples, sketch and photograph the site. I understand that failure to give this consent may result in denial of the permit(s) sought by this application.

False statements made herein are punishable as a Class A misdemeanor pursuant to Section 210.45 of the NYS Penal Law. Further, the applicant accepts full responsibility for all damage, direct or indirect, of whatever nature, and by whomever suffered, arising out of the project described herein and agrees to indemnify and save harmless the State from suits, actions, damages and costs of every name and description resulting from said project. In addition, Federal Law, 18 U.S.C., Section 1001 provides for a fine of not more than $10,000 or imprisonment for not more than 5 years, or both where an applicant knowingly and willingly falsifies, conceals, or covers up a material fact; or knowingly makes or uses a false, fictitious or fraudulent statement.

Signature of Applicant | Date

Applicant Must be (check all that apply): ☑ Owner ☑ Operator ☐ Lessee

Printed Name: Eliezer Herskowitz | Title: General Partner

Signature of Owner (if different than Applicant) | Date

Printed Name | Title

Signature of Contact / Agent | Date

Printed Name: Shea Thorvaldsen | Title: President & CEO

For Agency Use Only **DETERMINATION OF NO PERMIT REQUIRED**

Agency Application Number

(Agency Name) has determined that No Permit is required from this Agency for the project described in this application.

Agency Representative:

Printed Name | Title

Signature | Date

ENVIRONMENTAL QUESTIONNAIRE

This is intended to supplement ENG Form 4345, Application for Department of the Army Permit, or the Joint Application for Permit used in the State of New York. Please provide complete answers to all questions below which are relevant to your project. Any answers may be continued on separate sheet(s) of paper to be attached to this form.

PRIVACY ACT STATEMENT

The purpose of this form is to provide the Corps of Engineers with basic information regarding your project. This information will be used to facilitate evaluation of your permit application and for public dissemination as required by regulation. Failure to provide complete information may result in your application being declared incomplete for processing, thereby delaying processing of your application.

GENERAL--APPLICABLE TO ALL PROJECTS

1. Explain the need for, and purpose of, the proposed work.

The pier is to replace a once existing pier that will be used to boost public access to the waterfront and water-dependent recreation, namely fishing.

The reconstructed shoreline would serve the same purpose as the existing bulkhead, but be an aesthetic improvement with a longer lifespan than the existing erosion control system. Additionally, while providing similar erosion control, the proposed shoreline would lessen local turbidity near the shoreline as it reflects lesser wave energies seaward than a traditional bulkhead.

2. Provide the names and addresses of property owners adjacent to your work site (if not shown on the application form or project drawings).

North – Stony Point State Park; Palisades Interstate Park Commission
West – CSX Railroad
South – 9 Hudson Drive; Patsy's Bay Marina
East – Water; Haverstraw Bay/Hudson River

(Please note that depending upon the nature and extent of your project, you may be requested to provide the names and addresses of additional property owners proximate to your project site to ensure proper coordination.)

3. Photographs of the project site should be submitted. For projects in tidal areas, photographs of the waterway vicinity should be taken at low tide. Using a separate copy of your plan view, indicate the location and direction of each photograph as well as the date and time at which the photograph was taken. Provide a sufficient number of photographs so as to provide a clear understanding of conditions on and proximate to your project site.

Site photographs are included in Section VI.

4. Provide a copy of any environmental impact statement, or any other environmental report which was prepared for your project.

Additional environmental information is included in Sections I and III in the Narrative and the Short form EAF for the NYSDEC.

5. Provide a thorough discussion of alternatives to your proposal. This discussion should include, but not necessarily be limited to, the "no action" alternative and alternative(s) resulting in less disturbance to waters of the United States. For filling projects in waters of the United States, including wetlands, your alternatives discussion should demonstrate that there are no practicable alternatives to your proposed filling and that your project meets with current mitigation policy (i.e. avoidance, minimization and compensation).

Please find a detailed alternatives analysis and impacts analysis in Section 1 – Narrative, and Section 3 – NYSDEC Environmental Assessment form.

The proposed work reflects the completion of an analysis per "AMC" –

Avoidance – the facility cannot avoid dredging as the barges are currently bottoming out, with structural damage, and potential compromised energy supplies to New York City.

Minimization – the proposed dredging has been limited to -14 MLLW where in the original project depths were to -20. The detailed tidal analysis performed by the engineering consulting has determined the exact dredge depths necessary for operations without concern for failure or bottoming out.

Compensation – the site's dredge basin under the barges is a previously approved, existing dredge basin that is required for an operational facility. Removal of silt represents a restoration of the cut, and allows benthic habitat to recover.

DREDGING PROJECTS

Answer the following if your project involves dredging.

1. Indicate the estimated volume of material to be dredged and the depth (below mean low water) to which dredging would occur. Would there be overdepth dredging?

There is no dredging involved in this project.

2. You can apply for a ten-year permit for maintenance dredging. If you wish to apply for a ten-year permit, please provide the number of additional dredging events during the ten-year life of the permit and the amount of material to be removed during future events.

There is no dredging involved in this project.

3. Indicate of your drawings the dewatering area (if applicable) and disposal site for the dredged material (except landfill sites). Submit a sufficient number of photographs of the dewatering and disposal sites as applicable so as to provide a clear indication of existing conditions. For ten-year maintenance dredging permits, indicate the dewatering/disposal sites for future dredging events, if known.

There is no dredging involved in this project.

4. Describe the method of dredging (i.e. clamshell, dragline, etc.) and the expected duration of dredging.

There is no dredging involved in this project.

5. Indicate the physical nature of the material to be dredged (i.e. sand, silt, clay, etc.) and provide estimated percentages of the various constituents if available. For beach nourishment projects, grain size analysis data is required.

There is no dredging involved in this project.

6. Describe the method of dredged material containment (i.e. hay bales, embankment, bulkhead, etc.) and whether return flow from the dewatering/disposal site would reenter any waterway. Also indicate if there would be any barge overflow.

There is no dredging involved in this project.

MOORING FACILITIES

Answer the following if your project includes the construction or rehabilitation of recreational mooring facilities.

1. It is generally recommended that any fixed piers and walk ramps be limited to four feet in width, and that floats be limited to eight feet in width and rest at least two feet above the waterway bottom at mean low water. Terminal floats at private, non- commercial facilities should be limited to 20 feet in length. If you do not believe your proposal can meet with these recommendations, please provide the reason(s).

The proposed pier is not for the purpose of access to or within the adjoined marina. Rather, the pier is intended to be used for increased public access to the waterfront and support water-related recreation, namely fishing. As such, the proposed pier is intended to be 8 ft wide so to provide ample room for coinciding pedestrian walking, observing, and fishing.

2. Using your plan view, show to scale the location(s), position(s) and size(s) (including length, beam and draft) of vessel(s) to be moored at the proposed facility, including those of transient vessel(s) if known.

The proposed pier is not for mooring use.

3. For commercial mooring sites such as marinas, indicate the capacity of the facility and indicate on the plan view the location(s) of any proposed fueling and/or sewage pumpout facilities. If pumpout facilities are not planned, please discuss the rationale below and indicate the distance to the nearest available pumpout station.

N/A

4. Indicate on your plan view the distance to adjacent marine structures, if any are proximate and show the locations and dimensions of such structures.

N/A

5. Discuss the need for wave protection at the proposed facility. Please be advised that if a permit is issued, you would be required to recognize that the mooring facility may be subject to wave action from wakes of passing vessels, whose operations would not be required to be modified. Issuance of a permit would not relieve you of ensuring the integrity of the authorized structure(s) and the United States would not be held responsible for damages to the structure(s) and vessel(s) moored thereto from wakes from passing vessels.

N/A

BULKHEADING/BANK STABILIZATION/FILLING ACTIVITIES

Answer the following if your project includes construction of bulkheading (also retaining walls and seawalls) with backfill, filling of waters/wetlands, or any other bank stabilization fills such as riprap, revetments, gabions, etc.

1. Indicate the total volume of fill (including backfill behind a structure such as a bulkhead) as well as the volume of fill to be placed into waters of the United States. The amount of fill in waters of the United States can be determined by calculating the amount of fill to be placed below the plane of spring high tide in tidal areas and below ordinary high water in non-tidal areas.

Pier - The fill will be generated from the driving of piles into the mudline. There are 72 piles, 12 in diameter, 25 ft embedment, for a total of 61 CY of added fill below Mean High Tide.

Shoreline – The proposed shoreline will require excavation behind the current bulkhead line. This excavation will reach 10.4 ft back from the existing bulkhead at Mean High Tide elevation. The fill to be removed during construction below Mean High Water is 1,261 CY.

The net effect will be a loss of 1,200 CY of fill.

2. Indicate the source(s) and type(s) of fill material.

Pier – The fill will be from timber piles sourced from a local lumber yard. Southern yellow pine, treated with 2.5 CCA,

Shoreline – The fill will be clean stone sourced from a local quarry. The bedding stone will be a 6 in layer of ¾ in quarry stone and a 6 in layer of 3 in quarry stone. The armor stone will be a 2.5 ft layer of 12-in to 24-in quarry stone.

3. Indicate the method of fill placement (i.e. by hand, bulldozer, crane, etc.). Would any temporary fills be required in waterways or wetlands to provide access for construction equipment? If so, please indicate the area of such waters and/or wetlands to be filled, and show on the plan and sectional views.

Pier – The piles will be installed with a vibratory hammer using best management practices. The piles will be stuck and pushed down using the weight of hammer until they reach refusal. Only at that point, if necessary, the vibratory hammer will be turned on until the pile reaches the designed embedment.

Shoreline – The 6-in bedding stone will be dumped from a dump truck into the excavated area then graded using the excavator equipped with a bucket. The armor stone will be

NOAA Fisheries Greater Atlantic Regional Fisheries Office Essential Fish Habitat (EFH) Assessment & Fish and Wildlife Coordination Act (FWCA) Worksheet

This worksheet is your essential fish habitat (EFH) assessment. It provides us with the information necessary to assess the effects of your action on EFH under the Magnuson Stevens Fishery Conservation and Management Act and on NOAA trust resources under the Fish and Wildlife Coordination Act (FWCA). Consultation is not required if:

1. there is no adverse effect on EFH or NOAA trust resources (see page 10 for more info).
2. no EFH is designated and no trust resources may be present at the project site.

Instructions

Federal agencies or their non-federal designated lead agency should email the completed worksheet and necessary attachments to nmfs.gar.efh.consultation@noaa.gov. Include the public notice (if applicable) or project application and project plans showing:

- location map of the project site with area of impact.
- existing and proposed conditions.
- all waters of the U.S. on the project site with mean low water (MLW), mean high water (MHW), high tide line (HTL), and water depths clearly marked.
- sensitive habitats mapped, including special aquatic sites (submerged aquatic vegetation, saltmarsh, mudflats, riffles and pools, coral reefs, and sanctuaries and refuges), hard bottom or natural rocky habitat areas, and shellfish beds.
- site photographs, if available.

We will provide our EFH conservation recommendations and recommendations under the FWCA, as appropriate, within 30 days of receipt of a complete EFH assessment (60 days if an expanded consultation is necessary). Please submit complete information to minimize delays in completing the consultation.

This worksheet provides us with the information required[1] in an EFH assessment:

1. A description of the proposed action.
2. An analysis of the potential adverse effects on EFH and the federally managed species.
3. The federal agency's conclusions regarding the effects of the action on EFH.
4. Proposed mitigation, if applicable.

Your analysis **should focus on impacts that reduce the quality and/or quantity of the habitat or result in conversion to a different habitat type** for all life stages of species with designated EFH within the action area.

Use the information on the HCD website and NOAA's EFH Mapper to complete this worksheet. If you have questions, please contact the appropriate HCD staff member to assist you.

[1] The EFH consultation process is guided by the requirements of our EFH regulation at 50 CFR 600.905.

EFH ASSESSMENT WORKSHEET

General Project Information

Date Submitted:

Project/Application Number:

Project Name: Eagle Bay

Project Sponsor/Applicant: Breakers Stony Point, L.P./TMS Waterfront

Federal Action Agency (if state agency acting as delegated):

Fast-41 or One Federal Decision Project: ☐ Yes ☑ No

Action Agency Contact Name:

Contact Phone: Contact Email:

Latitude: 41°14'11" N Longitude: 74°1'37" W

Address, City/Town, State:

32 Hudson Street, Stony Point, NY 10980

Body of Water: Haverstraw Bay, Hudson River

Project Purpose:

Replace existing bulkhead with rip-rap revetment and install new timber pier.

Project Description:

The proposed project entails installing a 220 ft long timber pier to be utilized as a public access to the waterfront and promote water-related recreation, such as fishing and wildlife observation. Additionally, the existing timber bulkhead will be replaced by a riprap revetment with a pedestrian walkway immediately upland of the peak. The revetment is intended to serve as a "soft" shoreline which will maintain the already present erosion and wave protection while being more resilient and aesthetic than the existing system.

Anticipated Duration of In-Water Work or Start/End Dates:

2 months in 2021, 2 months in 2022

Habitat Description

EFH includes the biological, chemical, and physical components of the habitat. This includes the substrate and associated biological resources (e.g., benthic organisms, submerged aquatic vegetation, shellfish beds, salt marsh wetlands), the water column, and prey species.

Is the project in designated EFH[2]? ☑ Yes ☐ No

Is the project in designated HAPC[2]? ☐ Yes ☑ No

Is this coordination under FWCA only? ☐ Yes ☑ No

Total area of impact to EFH (indicate sq ft or acres): 2460 SF

Total area of impact to HAPC (indicate sq ft or acres): 0

Current water depths: 1-3 ft Salinity: 5-18 ppt Water temperature range: 77-79 deg

Sediment characteristics[3]:

What habitat types are in or adjacent to the project area and will they be permanently impacted? Select all that apply. Indicate if impacts will be temporary, if site will be restored, or if permanent conversion of habitat will occur. A project may occur in overlapping habitat types.

	Habitat Type	**Total impact (sq ft/acres)**	**Impacts are temporary**	**Restored to pre-existing conditions**	**Permanent conversion of all or part of habitat**
☐	Marine				
☐	Estuarine				
☑	Riverine (tidal)	2460 SF			X
☐	Riverine (non-tidal)				
☑	Intertidal				X
☑	Subtidal				X
☑	Water column		X	X	
☐	Salt marsh/ Wetland (tidal)				
☐	Wetland (non-tidal)				

[2] Use the tables on pages 7-9 to list species with designated EFH or the type of designated HAPC present.
[3] The level of detail is dependent on your project – e.g., a grain size analysis may be necessary for dredging.

	Habitat Type	Total impact (sq ft/acres)	Impacts are temporary	Restored to pre-existing conditions	Permanent conversion of all or part of habitat
☐	Rocky/hard bottom[4]:				
☐	Sand				
☐	Shellfish beds or oyster reefs				
☐	Mudflats				
☐	Submerged aquatic vegetation (SAV)[5], macroalgae, epifauna				
☐	Diadromous fish (migratory or spawning habitat)				

Indicate type(s) of rocky/hard bottom habitat (pebble, cobble, boulder, bedrock outcrop/ledge) and species of SAV:

Project Effects

Select all that apply	Project Type/Category
☐	Hatchery or Aquaculture
☐	Agriculture
☐	Forestry
☐	Military (e.g., acoustic testing, training exercises)
☐	Mining (e.g., sand, gravel)
☐	Restoration or fish/wildlife enhancement (e.g., fish passage, wetlands, beach renourishment, mitigation bank/ILF creation)

[4] Indicate type(s). The type(s) of rocky habitat will help you determine if the area is cod HAPC.
[5] Indicate species. Provide a copy of the SAV report and survey conducted at the site, if applicable.

Select all that apply	Project Type/Category
☐	Infrastructure/transportation (e.g., culvert construction, bridge repair, highway, port)
☐	Energy development/use
☐	Water quality (e.g., TMDL, wastewater, sediment remediation)
☐	Dredging/excavation and disposal
☑	Piers, ramps, floats, and other structures
☑	Bank/shoreline stabilization (e.g., living shoreline, groin, breakwater, bulkhead)
☐	Survey (e.g., geotechnical, geophysical, habitat, fisheries)
☐	Other

Select all that apply	Potential Stressors Caused by the Activity
☐	Underwater noise
☑	Water quality/turbidity/ contaminant release
☐	Vessel traffic/barge grounding
☐	Impingement/entrainment[6]
☐	Prevent fish passage/spawning
☑	Benthic community disturbance
☐	Impacts to prey species

Select all that apply and if temporary or permanent		Habitat alterations caused by the activity
Temp	Perm	
☐	☐	Water depth change
☐	☑	Tidal flow change
☐	☐	Fill
☐	☐	Habitat type conversion
		Other:
		Other:

[6] Entrainment is the voluntary or involuntary movement of aquatic organisms from a water body into a surface diversion or through, under, or around screens and results in the loss of the organisms from the population. Impingement is the involuntary contact and entrapment of aquatic organisms on the surface of intake screens caused when the approach velocity exceeds the swimming capability of the organism.

Details: project impacts and mitigation

The level of detail that you provide should be commensurate with the magnitude of impacts associated with the proposed project. Attach supplemental information if necessary.

Describe how the project would impact each of the habitat types selected above. Include temporary and permanent impact descriptions and direct and indirect impacts.

Currently, there exists a hard timber bulkhead on the shoreline, on which the tide fluctuates strictly up and down. The proposed action would replace the bulkhead with a riprap revetment of a 1.5:1 slope which would allow the tide to translate vertically, but additionally landward with a rising tide and seaward with a lowering tide. Also incorporated in the design is the inclusion of tide pools which will fill with water at high tides and hold it when the tide goes out

What specific measures will be used to avoid impacts, including project design, turbidity controls, acoustic controls, and time of year restrictions? If impacts cannot be avoided, why not?

Turbidity curtains will be installed to avoid impacts in adjacent areas outside the immedia

What specific measures will be used to minimize impacts?

Turbidity curtains will be installed around the work area to minimize turbidity in adjacent a

Is compensatory mitigation proposed? ☐ Yes ☑ No

If no, why not? If yes, describe plans for mitigation and how this will offset impacts to EFH. Include a conceptual compensatory mitigation and monitoring plan, if applicable.

No significant impacts to EFH or managed species are anticipated, hence no compensat

Federal Action Agency's EFH determination (select one)	
☐	There is no adverse effect[7] on EFH or EFH is not designated at the project site. EFH Consultation is not required. This is a FWCA-only request.
☐	The adverse effect[7] on EFH is not substantial. This means that the adverse effects are no more than minimal, temporary, or can be alleviated with minor project modifications or conservation recommendations. This is a request for an abbreviated EFH consultation.
☐	The adverse effect[7] on EFH is substantial. This is a request for an expanded EFH consultation. We will provide more detailed information, including an alternatives analysis and NEPA document, if applicable.

EFH and HAPC designations[8]

Use the EFH mapper to determine if EFH may be present in the project area and enter all species and lifestages that have designated EFH. Optionally, you may review the EFH text descriptions linked to each species in the EFH mapper and use them to determine if the described habitat is present. We recommend this for larger projects to help you determine what your impacts are.

Species	EFH is designated/mapped for:				Habitat present based on text description (optional)
	EFH: eggs	EFH: larvae	EFH: juvenile	EFH: adults/ spawning adults	
	☐	☐	☐	☐	☐
	☐	☐	☐	☐	☐
	☐	☐	☐	☐	☐
	☐	☐	☐	☐	☐

[7] An **adverse effect** is any impact that reduces the quality and/or quantity of EFH. Adverse effects may include direct or indirect physical, chemical, or biological alterations of the waters or substrate and loss of, or injury to, benthic organisms, prey species and their habitat, and other ecosystem components. Adverse effects to EFH may result from actions occurring within EFH or outside of EFH and may include site-specific or habitat-wide impacts, including individual, cumulative, or synergistic consequences of actions.

[8] Within the Greater Atlantic Region, EFH has been designated by the New England, Mid-Atlantic, and South Atlantic Fisheries Management Councils and NOAA Fisheries.

Species	EFH is designated/mapped for:				Habitat present based on text description (optional)
	EFH: eggs	EFH: larvae	EFH: juvenile	EFH: adults/ spawning adults	
Winter Flounder	✔	✔	✔	✔	☐
Little Skate	☐	☐	✔	✔	☐
Atlantic Herring	☐	✔	✔	✔	☐
Red Hake	✔	✔	✔	✔	☐
Windowpane Flounder	✔	✔	✔	✔	☐
Winter Skate	☐	☐	✔	✔	☐
Clearnose Skate	☐	☐	✔	✔	☐
Longfin Inshore Squid	✔	☐	☐	☐	☐
Bluefish	☐	☐	✔	✔	☐
Atlantic Butterfish	☐	✔	☐	☐	☐
Summer Flounder	☐	✔	✔	✔	☐
	☐	☐	☐	☐	☐
	☐	☐	☐	☐	☐
	☐	☐	☐	☐	☐
	☐	☐	☐	☐	☐
	☐	☐	☐	☐	☐
	☐	☐	☐	☐	☐
	☐	☐	☐	☐	☐
	☐	☐	☐	☐	☐
	☐	☐	☐	☐	☐
	☐	☐	☐	☐	☐
	☐	☐	☐	☐	☐

HAPCs

Select all that are in your action area.

☐	Summer flounder: SAV[9]	☐	Alvin & Atlantis Canyons
☐	Sandbar shark	☐	Baltimore Canyon
☐	Sand Tiger Shark (Delaware Bay)	☐	Bear Seamount
☐	Sand Tiger Shark (Plymouth-Duxbury-Kingston Bay)	☐	Heezen Canyon
☐	Inshore 20m Juvenile Cod	☐	Hudson Canyon
☐	Great South Channel Juvenile Cod	☐	Hydrographer Canyon
☐	Northern Edge Juvenile Cod	☐	Jeffreys & Stellwagen
☐	Lydonia Canyon	☐	Lydonia, Gilbert & Oceanographer Canyons
☐	Norfolk Canyon (Mid-Atlantic)	☐	Norfolk Canyon (New England)
☐	Oceanographer Canyon	☐	Retriever Seamount
☐	Veatch Canyon (Mid-Atlantic)	☐	Toms, Middle Toms & Hendrickson Canyons
☐	Veatch Canyon (New England)	☐	Washington Canyon
☐	Cashes Ledge	☐	Wilmington Canyon

[9] Summer flounder HAPC is defined as all native species of macroalgae, seagrasses, and freshwater and tidal macrophytes in any size bed, as well as loose aggregations, within adult and juvenile summer flounder EFH. In locations where native species have been eliminated from an area, then exotic species are included. Use local information to determine the locations of HAPC.

More information

The Magnuson-Stevens Fishery Conservation and Management Act (MSA) mandates that federal agencies conduct an essential fish habitat (EFH) consultation with NOAA Fisheries on any actions they authorize, fund, or undertake that may adversely affect EFH. An **adverse effect** is any impact that reduces the quality and/or quantity of EFH. Adverse effects may include direct or indirect physical, chemical, or biological alterations of the waters or substrate and loss of, or injury to, benthic organisms, prey species and their habitat, and other ecosystem components. Adverse effects to EFH may result from actions occurring within EFH or outside of EFH and may include site-specific or habitat-wide impacts, including individual, cumulative, or synergistic consequences of actions.

We designed this worksheet to help you to prepare EFH assessments. It is important to remember that an adverse effect determination is a trigger to consult with us. It does not mean that a project cannot proceed as proposed, or that project modifications are necessary. It means that the effects of the proposed action on EFH must be evaluated to determine if there are ways to avoid, minimize, or offset adverse effects.

This worksheet should be used as your EFH assessment or as a guide to develop your EFH assessment. At a minimum, you should include all the information required to complete this worksheet in your EFH assessment. The level of detail that you provide should be commensurate with the magnitude of impacts associated with the proposed project. If your answers in the worksheet and supplemental information you attach do not fully evaluate the adverse effects to EFH, we may request additional information to complete the consultation.

You may need to prepare an expanded EFH assessment for more complex projects to fully characterize the effects of the project and the avoidance and minimization of impacts to EFH. While the EFH assessment worksheet may be used for larger projects, the format may not be sufficient to incorporate the extent of detail required, and a separate EFH assessment may be developed. However, regardless of format, you should include an analysis as outlined in this worksheet for an expanded EFH assessment, along with any additional necessary information. This additional information includes:

- the results of on-site inspections to evaluate the habitat and site-specific effects.
- the views of recognized experts on the habitat or the species that may be affected.
- a review of pertinent literature and related information.
- an analysis of alternatives that could avoid or minimize the adverse effects on EFH.

Please contact our Greater Atlantic Regional Fisheries Office, Protected Resources Division regarding potential impacts to marine mammals or threatened and endangered species.

Useful Links

National Wetland Inventory Maps
https://www.fws.gov/wetlands/
EPA's National Estuary Program (NEP)
https://www.epa.gov/nep/local-estuary-programs
Northeast Regional Ocean Council (NROC) Data Portal
https://www.northeastoceandata.org/
Mid-Atlantic Regional Council on the Ocean (MARCO) Data Portal
http://portal.midatlanticocean.org/

Resources by State

Maine
Maine Office of GIS Data Catalog
https://geolibrary-maine.opendata.arcgis.com/datasets#data
Town shellfish information including shellfish conservation area maps
https://www.maine.gov/dmr/shellfish-sanitation-management/programs/municipal/ordinances/towninfo.html
State of Maine Shellfish Sanitation and Management
https://www.maine.gov/dmr/shellfish-sanitation-management/index.html
Eelgrass maps
https://www.maine.gov/dmr/science-research/species/eelgrass/index.html
Casco Bay Estuary Partnership
https://www.cascobayestuary.org/
Maine GIS Stream Habitat Viewer
https://www.arcgis.com/home/item.html?id=5869c2d20f0b4c3a9742bdd8abef42cb

New Hampshire
NH's Statewide GIS Clearinghouse, NH GRANIT
http://www.granit.unh.edu/
NH Coastal Viewer
http://www.granit.unh.edu/nhcoastalviewer/
State of NH Shellfish Program
https://www.des.nh.gov/organization/divisions/water/wmb/shellfish/

Massachusetts
MA Shellfish Sanitation and Management Program
https://www.mass.gov/shellfish-sanitation-and-management
MassGIS Data, Including Eelgrass Maps
http://maps.massgis.state.ma.us/map_ol/oliver.php
MA DMF Recommended TOY Restrictions Document
https://www.mass.gov/files/documents/2016/08/ry/tr-47.pdf
Massachusetts Bays National Estuary Program
https://www.mass.gov/orgs/massachusetts-bays-national-estuary-program
Buzzards Bay National Estuary Program
http://buzzardsbay.org/
Massachusetts Division of Marine Fisheries

https://www.mass.gov/orgs/division-of-marine-fisheries
Massachusetts Office of Coastal Zone Management
https://www.mass.gov/orgs/massachusetts-office-of-coastal-zone-management

Rhode Island
RI Shellfish and Aquaculture
http://www.dem.ri.gov/programs/fish-wildlife/marine-fisheries/shellfish-aquaculture.php
RI Shellfish Management Plan
http://www.shellfishri.com/
Eelgrass Maps
http://edc.maps.arcgis.com/apps/View/index.html?appid=db52bb689c1e44259c06e11fd24895f8
RI GIS Data
http://ridemgis.maps.arcgis.com/apps/webappviewer/index.html?id=87e104c8adb449eb9f905e5f18020de5
Narragansett Bay Estuary Program
http://nbep.org/
Rhode Island Division of Marine Fisheries
http://www.dem.ri.gov/programs/fish-wildlife/marine-fisheries/index.php
Rhode Island Coastal Resources Management Council
http://www.crmc.ri.gov/

Connecticut
CT Bureau of Aquaculture
https://www.ct.gov/doag/cwp/view.asp?a=3768&q=451508&doagNav=
CT GIS Resources
https://www.ct.gov/deep/cwp/view.asp?a=2698&q=323342&deepNav_GID=1707
Natural Shellfish Beds in CT
https://cteco.uconn.edu/viewer/index.html?viewer=aquaculture
Eelgrass Maps
https://www.fws.gov/northeast/ecologicalservices/pdf/wetlands/2012_CT_Eelgrass_Final_Report_11_26_2013.pdf
Long Island Sound Study
http://longislandsoundstudy.net/
CT GIS Resources
http://cteco.maps.arcgis.com/home/index.html
CT DEEP Office of Long Island Sound Programs and Fisheries
https://www.ct.gov/deep/site/default.asp
CT River Watershed Council
https://www.ctriver.org/

New York
Eelgrass Report
http://www.dec.ny.gov/docs/fish_marine_pdf/finalseagrassreport.pdf
Peconic Estuary Program
https://www.peconicestuary.org/
NY/NJ Harbor Estuary
https://www.hudsonriver.org/estuary-program

New York GIS Clearinghouse
https://gis.ny.gov/

New Jersey
Submerged Aquatic Vegetation Mapping
http://www.crssa.rutgers.edu/projects/sav/
Barnegat Bay Partnership
https://www.barnegatbaypartnership.org/
NJ GeoWeb
https://www.nj.gov/dep/gis/geowebsplash.htm
NJ DEP Shellfish Maps
https://www.nj.gov/dep/landuse/shellfish.html

Pennsylvania
Delaware River Management Plan
https://www.fishandboat.com/Fish/Fisheries/DelawareRiver/Documents/delaware_river_plan_exec_draft.pdf
PA DEP Coastal Resources Management Program
https://www.dep.pa.gov/Business/Water/Compacts%20and%20Commissions/Coastal%20Resources%20Management%20Program/Pages/default.aspx
PA DEP GIS Mapping Tools
https://www.dep.pa.gov/DataandTools/Pages/GIS.aspx

Delaware
Partnership for the Delaware Estuary
http://www.delawareestuary.org/
Center for Delaware Inland Bays
http://www.inlandbays.org/
Delaware FirstMap
http://delaware.maps.arcgis.com/home/index.html

Maryland
Submerged Aquatic Vegetation Mapping
http://web.vims.edu/bio/sav/
MERLIN
http://dnrweb.dnr.state.md.us/MERLIN/
Maryland Coastal Bays Program
https://mdcoastalbays.org/

Virginia
Submerged Aquatic Vegetation mapping
http://www.mrc.virginia.gov/regulations/Guidance_for_SAV_beds_and_restoration_final_approved_by_Commission_7-22-17.pdf
VDGIF Time of Year Restrictions (TOYR) and Other Guidance
https://www.dgif.virginia.gov/wp-content/uploads/VDGIF-Time-of-Year-Restrictions-Table.pdf

EFH Data Notice: Essential Fish Habitat (EFH) is defined by textual descriptions contained in the fishery management plans developed by the regional Fishery Management Councils. In most cases mapping data can not fully represent the complexity of the habitats that make up EFH. This report should be used for general interest queries only and should not be interpreted as a definitive evaluation of EFH at this location. A location-specific evaluation of EFH for any official purposes must be performed by a regional expert. Please refer to the following links for the appropriate regional resources.

Greater Atlantic Regional Office
Atlantic Highly Migratory Species Management Division

Query Results

Degrees, Minutes, Seconds: Latitude = 41°14'11" N, Longitude = 74°1'37" W
Decimal Degrees: Latitude = 41.24, Longitude = -73.97

The query location intersects with spatial data representing EFH and/or HAPCs for the following species/management units.

*** WARNING ***

Please note under "Life Stage(s) Found at Location" the category "ALL" indicates that all life stages of that species share the same map and are designated at the queried location.

EFH

Show	Link	Data Caveats	Species/Management Unit	Lifestage(s) Found at Location	Management Council	FMP
			Winter Flounder	Eggs Juvenile Larvae/Adult	New England	Amendment 14 to the Northeast Multispecies FMP
			Little Skate	Juvenile Adult	New England	Amendment 2 to the Northeast Skate Complex FMP
			Atlantic Herring	Juvenile Adult Larvae	New England	Amendment 3 to the Atlantic Herring FMP
			Red Hake	Adult Eggs/Larvae/Juvenile	New England	Amendment 14 to the Northeast Multispecies FMP
			Windowpane Flounder	Adult Larvae Eggs Juvenile	New England	Amendment 14 to the Northeast Multispecies FMP

Show	Link	Data Caveats	Species/Management Unit	Lifestage(s) Found at Location	Management Council	FMP
			Winter Skate	Adult Juvenile	New England	Amendment 2 to the Northeast Skate Complex FMP
			Clearnose Skate	Adult Juvenile	New England	Amendment 2 to the Northeast Skate Complex FMP
			Longfin Inshore Squid	Eggs	Mid-Atlantic	Atlantic Mackerel, Squid,& Butterfish Amendment 11
			Bluefish	Adult Juvenile	Mid-Atlantic	Bluefish
			Atlantic Butterfish	Larvae	Mid-Atlantic	Atlantic Mackerel, Squid,& Butterfish Amendment 11
			Summer Flounder	Larvae Juvenile Adult	Mid-Atlantic	Summer Flounder, Scup, Black Sea Bass

HAPCs

Show	Link	Data Caveats	HAPC Name	Management Council
			Summer Flounder	MAFMC

EFH Areas Protected from Fishing

No EFH Areas Protected from Fishing (EFHA) were identified at the report location.

Spatial data does not currently exist for all the managed species in this area. The following is a list of species or management units for which there is no spatial data. **For links to all EFH text descriptions see the complete data inventory: open data inventory -->

Mid-Atlantic Council HAPCs,
No spatial data for summer flounder SAV HAPC.

Short Environmental Assessment Form
Part 1 - Project Information

Instructions for Completing

Part 1 – Project Information. The applicant or project sponsor is responsible for the completion of Part 1. Responses become part of the application for approval or funding, are subject to public review, and may be subject to further verification. Complete Part 1 based on information currently available. If additional research or investigation would be needed to fully respond to any item, please answer as thoroughly as possible based on current information.

Complete all items in Part 1. You may also provide any additional information which you believe will be needed by or useful to the lead agency; attach additional pages as necessary to supplement any item.

Part 1 – Project and Sponsor Information

Name of Action or Project:

Eagle Bay Shoreline and Pier

Project Location (describe, and attach a location map):

Please refer to the location maps in Section VI

Brief Description of Proposed Action:

The proposed project entails installing a 220 ft long timber pier to be utilized as a public access to the waterfront and promote water-related recreation, such as fishing and wildlife observation. Additionally, the existing timber bulkhead will be replaced by a riprap revetment with a pedestrian walkway immediately upland of the peak. The revetment is intended to serve as a "soft" shoreline which will improve upon the already present erosion and wave protection while being more resilient and aesthetic than the existing system.

Name of Applicant or Sponsor:	Telephone: 914-403-8228
Eli Herskowitz	E-Mail: eliherskowitz@gmail.com

Address:

5 Eastview Rd

City/PO:	State:	Zip Code:
Monsey	NY	10952

	NO	YES
1. Does the proposed action only involve the legislative adoption of a plan, local law, ordinance, administrative rule, or regulation? If Yes, attach a narrative description of the intent of the proposed action and the environmental resources that may be affected in the municipality and proceed to Part 2. If no, continue to question 2.	☑	☐
2. Does the proposed action require a permit, approval or funding from any other government Agency? If Yes, list agency(s) name and permit or approval: USACE, NYSDOS	☐	☑

3. a. Total acreage of the site of the proposed action? 39.76 acres
   b. Total acreage to be physically disturbed? 3.06 acres
   c. Total acreage (project site and any contiguous properties) owned or controlled by the applicant or project sponsor? 39.76 acres

4. Check all land uses that occur on, are adjoining or near the proposed action:

5. ☑ Urban ☐ Rural (non-agriculture) ☐ Industrial ☐ Commercial ☑ Residential (suburban)
   ☐ Forest ☐ Agriculture ☑ Aquatic ☐ Other(Specify):
   ☐ Parkland

	NO	YES	N/A
5. Is the proposed action,			
a. A permitted use under the zoning regulations?	☐	☑	☐
b. Consistent with the adopted comprehensive plan?	☐	☑	☐

	NO	YES
6. Is the proposed action consistent with the predominant character of the existing built or natural landscape?	☑	☐
7. Is the site of the proposed action located in, or does it adjoin, a state listed Critical Environmental Area? If Yes, identify: _____	☑	☐
8. a. Will the proposed action result in a substantial increase in traffic above present levels?	☑	☐
b. Are public transportation services available at or near the site of the proposed action?	☑	☐
c. Are any pedestrian accommodations or bicycle routes available on or near the site of the proposed action?	☐	☑
9. Does the proposed action meet or exceed the state energy code requirements? If the proposed action will exceed requirements, describe design features and technologies: _____ _____	☐	☑
10. Will the proposed action connect to an existing public/private water supply? If No, describe method for providing potable water: _____ _____	☑	☐
11. Will the proposed action connect to existing wastewater utilities? If No, describe method for providing wastewater treatment: _____ _____	☑	☐
12. a. Does the project site contain, or is it substantially contiguous to, a building, archaeological site, or district which is listed on the National or State Register of Historic Places, or that has been determined by the Commissioner of the NYS Office of Parks, Recreation and Historic Preservation to be eligible for listing on the State Register of Historic Places?	☐	☑
b. Is the project site, or any portion of it, located in or adjacent to an area designated as sensitive for archaeological sites on the NY State Historic Preservation Office (SHPO) archaeological site inventory?	☐	☑
13. a. Does any portion of the site of the proposed action, or lands adjoining the proposed action, contain wetlands or other waterbodies regulated by a federal, state or local agency?	☐	☑
b. Would the proposed action physically alter, or encroach into, any existing wetland or waterbody?	☐	☑
If Yes, identify the wetland or waterbody and extent of alterations in square feet or acres: _____ ~~The proposed pier would be built into the Haverstraw Bay of the Hudson River. The coverage from the pier construction would be~~ 2,460 square feet _____		

14. Identify the typical habitat types that occur on, or are likely to be found on the project site. Check all that apply:

☑ Shoreline ☐ Forest ☐ Agricultural/grasslands ☐ Early mid-successional

☑ Wetland ☐ Urban ☐ Suburban

	NO	YES
15. Does the site of the proposed action contain any species of animal, or associated habitats, listed by the State or Federal government as threatened or endangered? Shortnose Sturgeon, Bald Ea...	☐	☑
16. Is the project site located in the 100-year flood plan?	☐	☑
17. Will the proposed action create storm water discharge, either from point or non-point sources? If Yes,	☑	☐
a. Will storm water discharges flow to adjacent properties?	☐	☐
b. Will storm water discharges be directed to established conveyance systems (runoff and storm drains)? If Yes, briefly describe:	☐	☐
18. Does the proposed action include construction or other activities that would result in the impoundment of water or other liquids (e.g., retention pond, waste lagoon, dam)? If Yes, explain the purpose and size of the impoundment: The proposed design includes three tide pools along the new revetment. The tide pools measure approximately 30 ft x 15 ft. The tide pools are included in the design to promote ecological development in relation with marine life.	☐	☑
19. Has the site of the proposed action or an adjoining property been the location of an active or closed solid waste management facility? If Yes, describe:	☑	☐
20. Has the site of the proposed action or an adjoining property been the subject of remediation (ongoing or completed) for hazardous waste? If Yes, describe: The project site and adjacent properties have not been subject to environmental remediation (ongoing or completed) for hazardous waste.	☐	☑

I CERTIFY THAT THE INFORMATION PROVIDED ABOVE IS TRUE AND ACCURATE TO THE BEST OF MY KNOWLEDGE

Applicant/sponsor/name: _____ Date: _____

Signature: _____ Title: _____

PRINT FORM

EAF Mapper Summary Report

Wednesday, June 03, 2020 3:12 PM

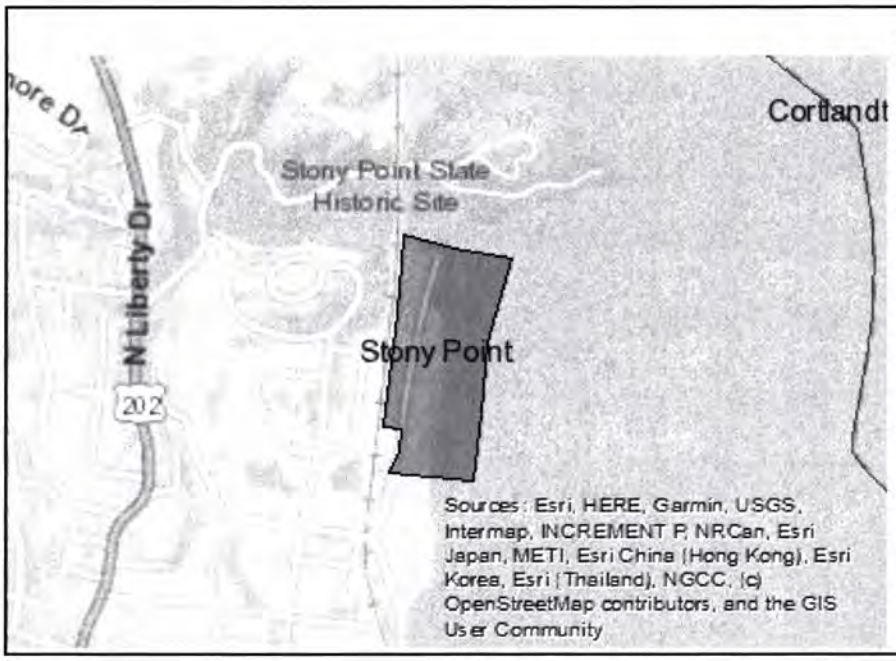

Disclaimer: The EAF Mapper is a screening tool intended to assist project sponsors and reviewing agencies in preparing an environmental assessment form (EAF). Not all questions asked in the EAF are answered by the EAF Mapper. Additional information on any EAF question can be obtained by consulting the EAF Workbooks. Although the EAF Mapper provides the most up-to-date digital data available to DEC, you may also need to contact local or other data sources in order to obtain data not provided by the Mapper. Digital data is not a substitute for agency determinations.

Part 1 / Question 7 [Critical Environmental Area]	No
Part 1 / Question 12a [National or State Register of Historic Places or State Eligible Sites]	Yes
Part 1 / Question 12b [Archeological Sites]	Yes
Part 1 / Question 13a [Wetlands or Other Regulated Waterbodies]	Yes - Digital mapping information on local and federal wetlands and waterbodies is known to be incomplete. Refer to EAF Workbook.
Part 1 / Question 15 [Threatened or Endangered Animal]	Yes
Part 1 / Question 15 [Threatened or Endangered Animal - Name]	Shortnose Sturgeon, Bald Eagle, Atlantic Sturgeon
Part 1 / Question 16 [100 Year Flood Plain]	Yes
Part 1 / Question 20 [Remediation Site]	Yes

NEW YORK STATE OF OPPORTUNITY. | Department of Environmental Conservation

APPLICATION FOR PERMIT
FOR THE CONSTRUCTION, RECONSTRUCTION OR EXPANSION OF DOCKING AND MOORING FACILITIES
(Including Platforms and Breakwaters)

Supplement D-2

FOR AGENCY USE ONLY
DEC APPLICATION NUMBER:
U.S. ARMY CORPS OF ENGINEERS APPLICATION NUMBER:

Please read all instructions on the following page.
TYPE OR PRINT CLEARLY IN INK.
Attach additional information as needed.

PROJECT CONSTRUCTION DESCRIPTION:
Construct timber pier for public access.

1. TYPE OF ACTIVITY:
   - ☐ New Facility Construction
   - ☐ Substantial Reconstruction
   - ☐ Expansion
   - ☐ Change in Use

2. CAPACITY OF DOCKING FACILITY OR MOORING AREA:
   - Maximum number of boats to be docked: 0
   - Maximum number of boats to be moored: 0
   - Boat type and size ranges to be served: N/A
   - Total surface area of facility perimeter: 2,460 square feet

3. IDENTIFY STRUCTURE TYPES AND THE USE OF SUCH STRUCTURES, INCLUDE SIZE, TYPE OF CONSTRUCTION AND MATERIALS TO BE USED, IF SUBSTANTIAL RECONSTRUCTION IS REQUIRED, EXPLAIN EXTENT OF ACTIVITY INCLUDING PERCENTAGE OF THE TOTAL STRUCTURE SIZE AFFECTED.

A timber pier will be constructed that is 220 ft long. The pier will be 220 ft long by 8 ft wide, with two, 12-inch diameter, timber piles located at 10-ft intervals. Two widened observation areas will be constructed along the length, measuring 16 ft wide and 22 ft long, complete with bench seating and added space for fishing from the pier. The end of the pier will be a 25 ft by 25 ft observation area covered with a pavilion which will again be outfitted with benches and allow added space for fishing from the pier. The pier will be a timber substructure, with composite decking, and steel railing with aviation wire spanning between posts.

(continue on attached sheet if necessary)

4. FOR NEW FACILITY, EXPANSION OF EXISTING FACILITY OR CHANGE IN USE, CHECK APPROPRIATE ITEMS AND DESCRIBE THE SERVICES TO BE PROVIDED:
   - ☐ Water Supply:
   - ☐ Sewage Disposal:
   - ☐ Electrical Supply: Lighting for the pier lights will be run along the joists below the deck
   - ☐ Gas Supply:
   - ☐ Gasoline/Oil Supply:
   - ☐ Other:

(continue on attached sheet if necessary)

5. SIGNATURE: DATE:

Reset

APPLICABILITY

1. The construction, reconstruction or expansion of docking or mooring facilities on, in or above state-owned lands under water requires authorization from the New York State Office of General Services. For application requirements contact: New York State Office of General Services, Division of Real Property Planning, Bureau of Land Management, Empire State Plaza, Corning Tower, 26th Floor, Albany, NY 12242. A permit pursuant to Article 15, Title 5 of the Environmental Conservation Law may not be required from the Department of Environmental Conservation in these circumstances.

2. The determination that no permit is required from the New York State Department of Environmental Conservation does not necessarily mean that no permit is required from the Unites States Army Corps of Engineers. All parties considering constructing projects within the navigable waters of the State should consult directly with the United States Army Corps of Engineers to accurately determine what requirements apply.

INSTRUCTIONS

1. Application shall include four (4) copies of this form, a map showing the facility location, scaled plans, cross-sections and specifications depicting all major structures and the delineated facility perimeters that include a reference point tied to a permanent structure or significant natural features.

2. This application must be accompanied by a New York State Department of Environmental Conservation JOINT APPLICATION FOR PERMIT (95-19-3).

3. Applications shall be submitted to the Regional Permit Administrator at the appropriate office of the Department, as indicated on the JOINT APPLICATION FOR PERMIT.

4. Construction, reconstruction or installation of docking and mooring structures shall NOT be started until a permit authorizing such activity has been issued by the New York State Department of Environmental Conservation.

5. The following definitions as listed in 6 NYCRR Part 608.1 apply.

   Docking Facility means any marine, boat basin, marine terminal, and any other areas on navigable waters containing a single structure or a collection of related structures, such as docks, piers, platforms, bulkheads, breakwaters, and pilings, used for the reception, securing, and protection of boats, ships, barges or other water craft.

   Mooring means a float, buoy, chain, cable, rope, pile, spar, dolphin or any other device or combination of devices that are anchored or fixed in navigable waters of the state to which a vessel can be made fast.

   Mooring Area means a collection of individual moorings located within a definable area of navigable waters of the state and under single private ownership or control.

   Perimeter means a boundary of a docking facility or mooring area consisting of a series of connected imaginary lines on a plan or map, encompassing all related structures such as docks, bulkheads, breakwaters, pilings, piers, platforms or moorings and the travel lanes and berthing areas that function together to create a facility or area at which vessels may be docked or moored.

   Platform means a generally horizontal, flat surface located in, on or over a waterbody, on which structures can be constructed or any activities can be conducted.

   Substantial reconstruction of structures means restoration or rebuilding, involving fifty percent (50%) or more of an existing fixed structure's surface area.

NEW YORK STATE OF OPPORTUNITY. | Department of Environmental Conservation

PERMISSION TO INSPECT PROPERTY

By signing this permission form for submission with an application for a permit(s) to the Department of Environmental Conservation ("DEC"), the signer consents to inspection by DEC staff of the project site or facility for which a permit is sought and, to the extent necessary, areas adjacent to the project site or facility. This consent allows DEC staff to enter upon and pass through such property in order to inspect the project site or facility, without prior notice, between the hours of 7:00 a.m. and 7:00 p.m., Monday through Friday. If DEC staff should wish to conduct an inspection at any other times, DEC staff will so notify the applicant and will obtain a separate consent for such an inspection.

Inspections may take place as part of the application review prior to a decision to grant or deny the permit(s) sought. By signing this consent form, the signer agrees that this consent remains in effect as long as the application is pending, and is effective regardless of whether the signer, applicant or an agent is present at the time of the inspection. In the event that the project site or facility is posted with any form of "posted" or "keep out" notices, or fenced in with an unlocked gate, this permission authorizes DEC staff to disregard such notices or unlocked gates at the time of inspection.

The signer further agrees that during an inspection, DEC staff may, among other things, take measurements, may analyze physical characteristics of the site including, but not limited to, soils and vegetation (taking samples for analysis), and may make drawings and take photographs.

Failure to grant consent for an inspection is grounds for, and may result in, denial of the permit(s) sought by the application.

Permission is granted for inspection of property located at the following address(es):

32 Hudson Drive
Stony Point, NY 10980

*By signing this form, I affirm under penalty of perjury that I am authorized to give consent to entry by DEC staff as described above. I understand that false statements made herein are punishable as a Class A misdemeanor pursuant to Section 210.45 of the Penal Law.**

Eliezer Herskowitz, Partner		
Print Name and Title	Signature	Date

*The signer of this form must be an individual or authorized representative of a legal entity that:

- owns fee title and is in possession of the property identified above;
- maintains possessory interest in the property through a lease, rental agreement or other legally binding agreement; or
- is provided permission to act on behalf of an individual or legal entity possessing fee title or other possessory interest in the property for the purpose of consenting to inspection of such property.

RECEIVED
JUL 07 2020
NYS Department of State
Planning and Development

NEW YORK STATE DEPARTMENT OF STATE
COASTAL MANAGEMENT PROGRAM

Federal Consistency Assessment Form

An applicant, seeking a permit, license, waiver, certification or similar type of approval from a federal agency which is subject to the New York State Coastal Management Program (CMP), shall complete this assessment form for any proposed activity that will occur within and/or directly affect the State's Coastal Area. This form is intended to assist an applicant in certifying that the proposed activity is consistent with New York State's CMP as required by U.S. Department of Commerce regulations (15 CFR 930.57). It should be completed at the time when the federal application is prepared. The Department of State will use the completed form and accompanying information in its review of the applicant's certification of consistency.

A. APPLICANT (please print)

1. Name: Breakers Stony Point LP

2. Address: 5 Eastview Rd, Monsey, NY 10952

3. Telephone: Area Code ( ) (914) 403-8228

B. PROPOSED ACTIVITY

1. Brief description of activity:

Replace existing bulkhead with rip-rap revetment and install new timber pier.

2. Purpose of activity:

The pier is intended to be utilized as a public access to the waterfront and promote water-related recreation, such as fishing and wildlife observation. The reconstructed shoreline would provide the same erosion and wave protection as the existing bulkhead, but be an aesthetic improvement with a longer lifespan than the existing erosion control system.

3. Location of activity:

Rockland	Stony Point	36 Hudson Drive
County	City, Town, or Village	Street or Site Description

4. Type of federal permit/license required: USACE Individual Permit

5. Federal application number, if known: N/A

6. If a state permit/license was issued or is required for the proposed activity, identify the state agency and provide the application or permit number, if known:

N/A

C. COASTAL ASSESSMENT Check either "YES" or "NO" for each of these questions. The numbers following each question refer to the policies described in the CMP document (see footnote on page 2) which may be affected by the proposed activity.

1. Will the proposed activity result in any of the following:	YES	NO
a. Large physical change to a site within the coastal area which will require the preparation of an environmental impact statement? (11, 22, 25, 32, 37, 38, 41, 43)	☒	☐
b. Physical alteration of more than two acres of land along the shoreline, land under water or coastal waters? (2, 11, 12, 20, 28, 35, 44)	☒	☐
c. Revitalization/redevelopment of a deteriorated or underutilized waterfront site? (1)	☒	☐
d. Reduction of existing or potential public access to or along coastal waters? (19, 20)	☐	☒
e. Adverse effect upon the commercial or recreational use of coastal fish resources? (9,10)	☐	☒
f. Siting of a facility essential to the exploration, development and production of energy resources in coastal waters or on the Outer Continental Shelf? (29)	☐	☒
g. Siting of a facility essential to the generation or transmission of energy? (27)	☐	☒
h. Mining, excavation, or dredging activities, or the placement of dredged or fill material in coastal waters? (15, 35)	☒	☐
i. Discharge of toxics, hazardous substances or other pollutants into coastal waters? (8, 15, 35)	☐	☒
j. Draining of stormwater runoff or sewer overflows into coastal waters? (33)	☐	☒
k. Transport, storage, treatment, or disposal of solid wastes or hazardous materials? (36, 39)	☐	☒
l. Adverse effect upon land or water uses within the State's small harbors? (4)	☐	☒

2. Will the proposed activity affect or be located in, on, or adjacent to any of the following:	YES	NO
a. State designated freshwater or tidal wetland? (44)	☒	☐
b. Federally designated flood and/or state designated erosion hazard area? (11, 12, 17,)	☒	☐
c. State designated significant fish and/or wildlife habitat? (7)	☒	☐
d. State designated significant scenic resource or area? (24)	☒	☐
e. State designated important agricultural lands? (26)	☐	☒
f. Beach, dune or barrier island? (12)	☐	☒
g. Major ports of Albany, Buffalo, Ogdensburg, Oswego or New York? (3)	☐	☒
h. State, county, or local park? (19, 20)	☐	☒
i. Historic resource listed on the National or State Register of Historic Places? (23)	☐	☒

3. Will the proposed activity require any of the following:	YES	NO
a. Waterfront site? (2, 21, 22)	☒	☐
b. Provision of new public services or infrastructure in undeveloped or sparsely populated sections of the coastal area? (5)	☒	☐
c. Construction or reconstruction of a flood or erosion control structure? (13, 14, 16)	☒	☐
d. State water quality permit or certification? (30, 38, 40)	☒	☐
e. State air quality permit or certification? (41, 43)	☐	☒

4. Will the proposed activity occur within and/or affect an area covered by a State approved local waterfront revitalization program? (see policies in local program document)	☒	☐

D. ADDITIONAL STEPS

1. If all of the questions in Section C are answered "NO", then the applicant or agency shall complete Section E and submit the documentation required by Section F.

2. If any of the questions in Section C are answered "YES", then the applicant or agent is advised to consult the CMP, or where appropriate, the local waterfront revitalization program document*. The proposed activity must be analyzed in more detail with respect to the applicable state or local coastal policies. On a separate page(s), the applicant or agent shall: (a) identify, by their policy numbers, which coastal policies are affected by the activity, (b) briefly assess the effects of the activity upon the policy; and, (c) state how the activity is consistent with each policy. Following the completion of this written assessment, the applicant or agency shall complete Section E and submit the documentation required by Section F.

E. CERTIFICATION

The applicant or agent must certify that the proposed activity is consistent with the State's CMP or the approved local waterfront revitalization program, as appropriate. If this certification cannot be made, the proposed activity shall not be undertaken. If this certification can be made, complete this Section.

"The proposed activity complies with New York State's approved Coastal Management Program, or with the applicable approved local waterfront revitalization program, and will be conducted in a manner consistent with such program."

Applicant/Agent's Name: Shea Thorvaldsen

Address: 247 West 35th Street, 10N, New York, NY 10001

Telephone: Area Code ( ) 646-773-9414

Applicant/Agent's Signature: SIGN HERE Date: 9/14/2020

F. SUBMISSION REQUIREMENTS

1. The applicant or agent shall submit the following documents to the **New York State Department of State, Office of Coastal, Local Government and Community Sustainability, Attn: Consistency Review Unit, 1 Commerce Plaza, 99 Washington Avenue - Suite 1010, Albany, New York 12231.**

a. Copy of original signed form.
b. Copy of the completed federal agency application.
c. Other available information which would support the certification of consistency.

2. The applicant or agent shall also submit a copy of this completed form along with his/her application to the federal agency.

3. If there are any questions regarding the submission of this form, contact the Department of State at (518) 474-6000.

*These state and local documents are available for inspection at the offices of many federal agencies, Department of environmental Conservation and Department of State regional offices, and the appropriate regional and county planning agencies. Local program documents are also available for inspection at the offices of the appropriate local government.

Addendum to
New York State Department of State
Coastal Management Program
Federal Consistency Assessment Form

Applicant: Eliezer Herskowitz
Breakers Stony Point, L.P.
5 Eastview Rd
Monsey, NY 10952

Agent: Shea Thorvaldsen
TMS Waterfront
247 West 35th Street
10th Floor
New York, NY 10001

Coastal Assessment C.1.a.:

Policy 11: Buildings and other structures will be sited in the coastal area so as to minimize damage to property and the endangering of human lives caused by flooding and erosion.

The proposed shoreline will be constructed of rip-rap stone, on a 1:1 slope, to replace the existing timber bulkhead. This proposed "soft" shoreline will allow for better dispersion of wave forces on the shore and improve upon the current erosion protection. The peak elevation of the proposed revetment and esplanade is consistent with the existing conditions. The proposed revetment will balance preserving the width of the shoreline and mitigating the impact energies from waves and currents. Riprap revetments deflect wave energies seaward but also absorb a portion of those energies in their voids, which in turn lessens the turbidity from deflected waves when compared to hard line bulkheads; the proposed revetment will be more resilient than a natural shoreline, but less impactful than the existing timber bulkhead.

Policy 22: Development, when located adjacent to the shore, will provide for water-related recreation, whenever such use is compatible with reasonably anticipated demand for such activities, and is compatible with the primary purpose of the development.

The proposed pier will facilitate water-related recreation, namely fishing, but also observation from an enhanced vantage point beyond the shore. The sole purpose of the pier is to boost water-related recreation. The public esplanade will also attract people to the Hudson River and provide a safe space for passive waterfront access.

Policy 25: Protect, restore or enhance natural and man-made resources which are not identified as being of statewide significance, but which contribute to the overall scenic quality of the coastal area.

The proposed rip rap revetment shoreline with tidal pools will improve shore protection as compared to the existing timber bulkhead system. The proposed shoreline is more aesthetically pleasing and will enhance the scenic quality of the area and attract people to the waterfront. The design of the proposed shoreline includes tide pools which will fill with water at high tide, then be visible and full of water when the tide pushes out. The design also includes a pedestrian walkway at the crest of the revetment which will allow for ample observation of the water, shoreline, and tide pools. In addition, the project proposes to remove a concrete pad, a section of which overlaps with a state-designated freshwater wetland adjacent area (100' boundary around the freshwater wetland perimeter). The freshwater wetland adjacent area will be graded and restored with native, freshwater wetland species.

Policy 32: Encourage the use of alternative or innovative sanitary waste systems in small communities where the costs of conventional facilities are unreasonably high, given the size of the existing tax base of these communities.

This project has no impact on sanitary waste systems.

Policy 37: Best management practices will be utilized to minimize the non-point discharge of excess nutrients, organics and eroded soils into coastal waters.

Best management practices will be utilized for erosion and sediment control on the project site. Specifically, turbidity curtains will be installed around the work areas to minimize turbidity in adjacent areas. Construction will cease, should a noticeable increase in turbidity occur in the areas adjacent to the project, until adequate best management practices are deployed. Spill protection measures will be implemented on the work barges used for pile driving to prevent any discharges from entering the Hudson River and a spill kit will be on-site should any spill occur. Storm water pollution prevention controls for the revetment construction will be implemented and will include hay bales or silt fences to manage stormwater. Construction debris will be collected and disposed of in an approved off-site waste disposal location. Finally, work will adhere to all required moratoriums and will schedule work to avoid in-water work.

Policy 38: The quality and quantity of surface water and groundwater supplies will be conserved and protected, particularly where such waters constitute the primary or sole source of water supply.

This project will not impact surface or groundwater supplies. Best management practices will be utilized for erosion and sediment control on the project site to prevent silt from leaving the

immediate project area and risk affecting adjacent waterbodies. Turbidity curtains will be installed around the in-water work areas to minimize turbidity in adjacent areas.

Policy 41: Land use or development in the coastal area will not cause national or state air quality standards to be violated.

All parties involved in construction will be sure to adhere to all pertinent air quality standards. The finished product will not have an effect on air quality in the area.

Policy 43: Land use or development in the coastal area must not cause the generation of significant amounts of acid rain precursors: nitrates and sulfates.

Acid rain precursors will not be produced from this project.

Coastal Assessment C.1.b.:

Policy 2: Facilitate the siting of water-dependent uses and facilities on or adjacent to coastal waters.

The proposed pier will facilitate water-related recreation, namely fishing, but also observation from an enhanced vantage point beyond the shore. The sole purpose of the pier is to boost water-related recreation. The public esplanade will also attract people to the Hudson River and provide a safe space for passive waterfront access.

Policy 11: Buildings and other structures will be sited in the coastal area so as to minimize damage to the property and endangering of human lives caused by flooding and erosion.

The proposed shoreline will be constructed of rip-rap stone, on a 1:1 slope, to replace the existing timber bulkhead. This proposed "soft" shoreline will allow for better dispersion of wave forces on the shore and improve upon the current erosion protection. The peak elevation of the proposed revetment and esplanade is consistent with the existing conditions. The proposed revetment will balance preserving the width of the shoreline and mitigating the impact energies from waves and currents. Riprap revetments deflect wave energies seaward but also absorb a portion of those energies in their voids, which in turn lessens the turbidity from deflected waves when compared to hard line bulkheads; the proposed revetment will be more resilient than a natural shoreline, but less impactful than the existing timber bulkhead.

Policy 12: Activities or development in the coastal area will be undertaken so as to minimize damage to natural resources and property from flooding and erosion by protecting natural protective features including beaches, dunes, barrier islands and bluffs.

The proposed shoreline's main function is to protect the upland property from flooding and erosion. The riprap will absorb and deflect wave energy away from the property and the height of the structure is sufficient to protect from overtopping and flooding. The existing timber bulkhead serves these purposes, but the proposed will boost the aesthetic of the protection and will have an increased lifespan than a timber bulkhead. In addition, the project proposes to remove a concrete pad, a section of which overlaps with a state-designated freshwater wetland adjacent area (100' boundary around the freshwater wetland perimeter). The freshwater wetland adjacent area will be graded and restored with native, freshwater wetland species. There are no beaches, dunes, barrier islands, or bluffs on-site.

Policy 20: Access to the publicly-owned foreshore and to lands immediately adjacent to the foreshore or the water's edge that are publicly-owned shall be provided and it shall be provided in a manner compatible with adjoining uses.

Access on land and by water will remain be unaffected by the proposed work. The proposed pier will be publicly accessible and will facilitate water-related recreation, namely fishing, but also observation from an enhanced vantage point beyond the shore. The sole purpose of the pier is to boost water-related recreation. The public esplanade will also attract people to the Hudson River and provide a safe space for passive waterfront access.

Policy 28: Ice management practices shall not interfere with the production of hydroelectric power, damage significant fish and wildlife and their habitats or increase shoreline erosion or flooding.

Ice management is not applicable for this project.

Policy 35: Dredging and filling in coastal waters and disposal of dredged material will be undertaken in a manner that meets existing State permit requirements, and protects significant fish and wildlife habitats, scenic resources, natural protective features, important agricultural lands, and wetlands.

There will be no dredging as part of this project.

Policy 44: Preserve and protect tidal and freshwater wetlands and preserve the benefits from these areas.

Wetlands will be preserved and protected by the proposed shoreline to an equal degree than the existing bulkhead. The proposed shoreline will absorb more energy than the bulkhead, therefore decreasing the chances of localized structural failure that can occur with a traditional bulkhead. In addition, the project proposes to remove a concrete pad, a section of which overlaps with a state-designated freshwater wetland adjacent area (100' boundary around the freshwater wetland

perimeter). The freshwater wetland adjacent area will be graded and restored with native, freshwater wetland species.

Coastal Assessment C.1.c.:

Policy 1: Restore, revitalize, and redevelop deteriorated and underutilized waterfront areas for commercial, industrial, cultural, recreational, and other compatible uses.

The proposed action is to redevelop the waterfront area to maintain its flood and erosion protection, but also introduce a more aesthetic protection measure which will benefit commercial, cultural, recreational, and ecological uses in the area. The project will provide public access to the waterfront via a fishing pier and waterfront esplanade, and furthermore, shall restore an area of the freshwater wetland adjacent area to the north that is currently covered by a section of concrete pad.

Coastal Assessment C.1.h.:

Policy 15: Mining, excavation or dredging in coastal waters shall not significantly interfere with the natural coastal processes which supply beach materials to land adjacent to such waters and shall be undertaken in a manner which will not cause an increase in erosion of such land.

Excavation will occur behind the current bulkhead line. The toe of the proposed revetment will be situated at the current bulkhead line and at the mudline elevation. The revetment will slope upland and back from there, thus the river's water will encroach more upland than it currently does when the tide rises. No fill will be removed seaward of the existing bulkhead line. The proposed riprap revetment will aid natural coastal processes by softening the shoreline, slowing flooding and dissipating wave impacts.

Policy 35: Dredging and filling in coastal waters and disposal of dredged material will be undertaken in a manner that meets existing State dredging permit requirements, and protects significant fish and wildlife habitats, scenic resources, natural protective features, important agricultural lands, and wetlands.

No dredging will occur as part of this project. The proposed work will remove the existing timber bulkhead from 1,400 linear feet of the shoreline and replace the bulkhead with a stone rip rap revetment. The toe of the revetment will be at the base of the existing bulkhead and the revetment will extend landward at a 1:1.5 slope, resulting in a net cut of land along the Hudson River shoreline. The excavation for the revetment construction will yield a net cut of approximately 1,261 cubic yards below Mean High Water; the fill associated with the proposed pier is

approximately 61 cubic yards (from the piles). Therefore there is a net excavation on-site of 1,200 cubic yards.

Coastal Assessment C.2.a.:

Policy 44: Preserve and protect tidal and freshwater wetlands and preserve the benefits derived from these areas.

Wetlands will be preserved and protected by the proposed shoreline to an equal degree than the existing bulkhead. The proposed shoreline will absorb more energy than the bulkhead, therefore decreasing the chances of localized structural failure that can occur with a traditional bulkhead. The project also proposes to remove a concrete pad, a section of which overlaps with a state-designated freshwater wetland adjacent area (100' boundary around the freshwater wetland perimeter). The freshwater wetland adjacent area will be graded and restored with native, freshwater wetland species.

Coastal Assessment C.2.b.:

Policy 11: Buildings and other structures will be sited in the coastal area so as to minimize damage to property and the endangering of human lives caused by flooding and erosion.

The proposed shoreline will be constructed of rip-rap stone, on a 1:1 slope, to replace the existing timber bulkhead. This proposed "soft" shoreline will allow for better dispersion of wave forces on the shore and improve upon the current erosion protection. The peak elevation of the proposed revetment and esplanade is consistent with the existing conditions. The proposed revetment will balance preserving the width of the shoreline and mitigating the impact energies from waves and currents. Riprap revetments deflect wave energies seaward but also absorb a portion of those energies in their voids, which in turn lessens the turbidity from deflected waves when compared to hard line bulkheads; the proposed revetment will be more resilient than a natural shoreline, but less impactful than the existing timber bulkhead.

Policy 12: Activities or development in the coastal area will be undertaken so as to minimize damage to natural resources and property from flooding and erosion by protecting natural protective features including beaches, dunes, barrier islands and bluffs.

The proposed shoreline's main function is to protect the upland property from flooding and erosion. The riprap will absorb and deflect wave energy away from the property and the height of the structure is sufficient to protect from overtopping and flooding. The existing timber bulkhead serves these purposes, but the proposed will boost the aesthetic of the protection and

will have an increased lifespan than a timber bulkhead. In addition, the project proposes to remove a concrete pad, a section of which overlaps with a state-designated freshwater wetland adjacent area (100′ boundary around the freshwater wetland perimeter). The freshwater wetland adjacent area will be graded and restored with native, freshwater wetland species. There are no beaches, dunes, barrier islands, or bluffs on-site.

Policy 17: Non-structural measures to minimize damage to natural resources and property from flooding and erosion shall be used whenever possible.

The proposed design would remove the structural timber bulkhead and replace with a sloped riprap revetment, increasing flood and erosion protection. Marine growth will occur within and atop of the proposed revetment, an increase to the current surface area allowing for marine growth. The proposed shoreline will be constructed of rip-rap stone, on a 1:1 slope, to replace the existing timber bulkhead. This proposed "soft" shoreline will allow for better dispersion of wave forces on the shore and improve upon the current erosion protection. The peak elevation of the proposed revetment and esplanade is consistent with the existing conditions. The proposed revetment will balance preserving the width of the shoreline and mitigating the impact energies from waves and currents. Riprap revetments deflect wave energies seaward but also absorb a portion of those energies in their voids, which in turn lessens the turbidity from deflected waves when compared to hard line bulkheads; the proposed revetment will be more resilient than a natural shoreline, but less impactful than the existing timber bulkhead.

Coastal Assessment C.2.c.:

Policy 7: Significant coastal fish and wildlife habitats will be protected, preserved, and where practical, restored so as to maintain their viability as habitats.

The proposed work is occurring within the perimeter of an existing and permitted marina. Protection of the habitat during construction will be through the use of BMP(s) and soil erosion protections. If moratoriums are mandated, for the protection of migratory fish, spawning, etc. they will be observed.

Coastal Assessment C.2.d.:

Policy 24: Prevent impairment of scenic resources of statewide significance.

The proposed shoreline will remain under the top elevation of the existing bulkhead and upland site and will not impair the visual corridors of the Hudson River. In addition, the project proposes to remove a concrete pad, a section of which overlaps with a state-designated freshwater wetland

adjacent area (100' boundary around the freshwater wetland perimeter). The freshwater wetland adjacent area will be graded and restored with native, freshwater wetland species. There are no beaches, dunes, barrier islands, or bluffs on-site.

Coastal Assessment C.3.a.:

Policy 2: Facilitate the siting of water-dependent uses and facilities on or adjacent to coastal waters.

The proposed pier will facilitate water-related recreation, namely fishing, but also observation from an enhanced vantage point beyond the shore. The sole purpose of the pier is to boost water-related recreation. The public esplanade will also attract people to the Hudson River and provide a safe space for passive waterfront access.

Policy 21: Water-dependent and water-enhanced recreation will be encouraged and facilitated, and will be given priority over non-water-related uses along the coast.

The proposed pier will facilitate water-related recreation, namely fishing, but also observation from an enhanced vantage point beyond the shore. The sole purpose of the pier is to boost water-related recreation. The public esplanade will also attract people to the Hudson River and provide a safe space for passive waterfront access. There is an existing marina in the project vicinity; the proposed action will not interfere with the marina access or use.

Policy 22: Development, when located adjacent to the shore, will provide for water-related recreation, whenever such use is compatible with reasonably anticipated demand for such activities, and is compatible with the primary purpose of the development.

The proposed pier will facilitate water-related recreation, namely fishing, but also observation from an enhanced vantage point beyond the shore. The sole purpose of the pier is to boost water-related recreation. The public esplanade will also attract people to the Hudson River and provide a safe space for passive waterfront access.

Coastal Assessment C.3.b.:

Policy 5: Encourage the location of development in areas where public services and facilities essential to such development are adequate.

There are adequate public services and facilities at the project area and in the vicinity to support the proposed pier and shoreline development.

Coastal Assessment C.3.c.:

Policy 13: The construction or reconstruction of erosion protection structures shall be undertaken only if they have reasonable probability of controlling erosion for at least thirty years as demonstrated in design and construction standards and/or assured maintenance or replacement programs.

The proposed structure consists of a rip-rap revetment, whose design has been a proven effective erosion-protection measure. Stone revetments and sea walls are becoming more common as they do not create a hard barrier between the land and water, like a bulkhead, that experiences high forces. Rather, it works with the water and not only deflects water and energy away from shore, but allows it to flow into the voids between stones, dissipating energy in doing so.

Policy 14: Activities and development including the construction or reconstruction of erosion protection structures shall be undertaken so that there will be no measurable increase in erosion or flooding at the site of such activities or development, or at other locations.

The proposed structure consists of a rip-rap revetment which will maintain the existing erosion control along the project site, but also decrease the erosion effects at the adjacent locations. Currently, the bulkhead deflects wave energy in a majority away from shore, but also to some affect along the length of the bulkhead. The energy traveling along the length of the bulkhead will reach the end at some point, which effectively accumulates energy and releases it directly to the shoreline immediately adjacent to the bulkhead. Implementing a "soft" revetment, not only decreases the energy that is translated along the length of the shoreline, but allows for a gradual transition to the adjacent area's shoreline. This would be as opposed to a sudden dump of accumulated energy at the end of the bulkhead wall.

Policy 16: Public funds shall only be used for erosion protective structures where necessary to protect human life, new development which requires a location within or adjacent to an erosion hazard area to be able to function, or existing development; and only where the public benefits outweigh the long-term monetary and other costs including the potential for increasing erosion and adverse effects on natural protective features.

No public funds are intended for use at the project site.

Coastal Assessment C.3.d.:

Policy 30: Municipal, industrial, and commercial discharge of pollutants, including but not limited to, toxic and hazardous substances, into coastal waters will conform to state and national water quality standards.

No pollutants of any type will be discharged into the Hudson River as a result of the proposed work. Any necessary drainage will be in conformance with state-approved storm water pollution prevention plans and SPDES permits.

Policy 38: The quality and quantity of surface water and groundwater supplies will be conserved and protected, particularly where such waters constitute the primary or sole source of water supply.

This project will not impact surface or groundwater supplies. Best management practices will be utilized for erosion and sediment control on the project site to prevent silt from leaving the immediate project area and risk affecting adjacent waterbodies. Turbidity curtains will be installed around the in-water work areas to minimize turbidity in adjacent areas.

Policy 40: Effluent discharged from major steam electric generating and industrial facilities into coastal waters will not be unduly injurious to fish and wildlife and shall conform to state water quality standards.

This policy does not apply to this specific project; there are no electric generation or industrial facilities or other effluent discharge related to the proposed action.

SITE PHOTOGRAPHS

Photograph Key Map

Photograph 1: Existing timber bulkhead and shoreline – Facing south.

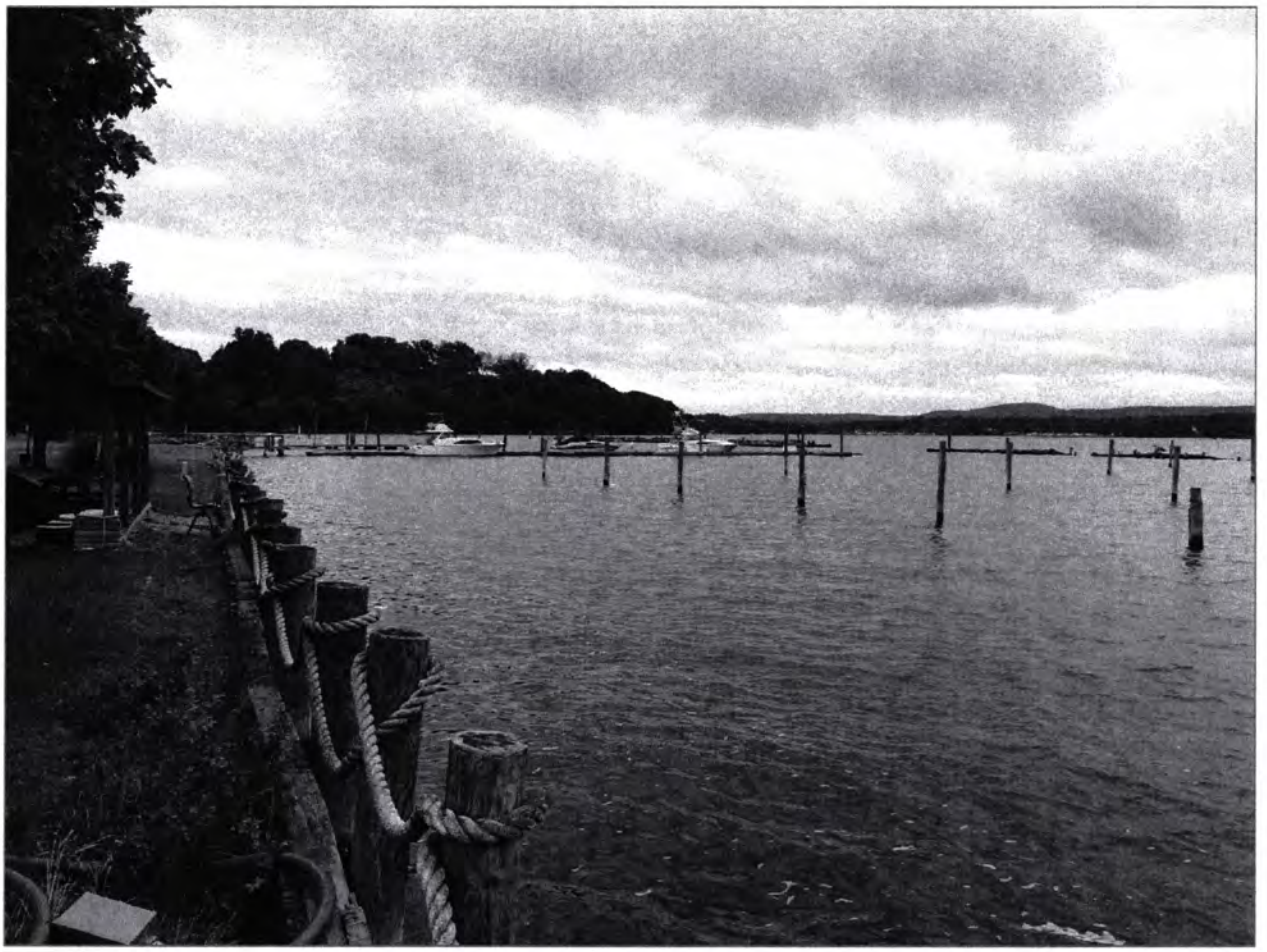

Photograph 2: Existing timber bulkhead, shoreline, and marina– Facing northeast.

Photograph 3: Upland area adjacent to Bergen Basin – Facing south.

Photograph 4: Existing marina and floats – Facing south.

Photograph 5: Existing timber bulkhead – Facing southwest.

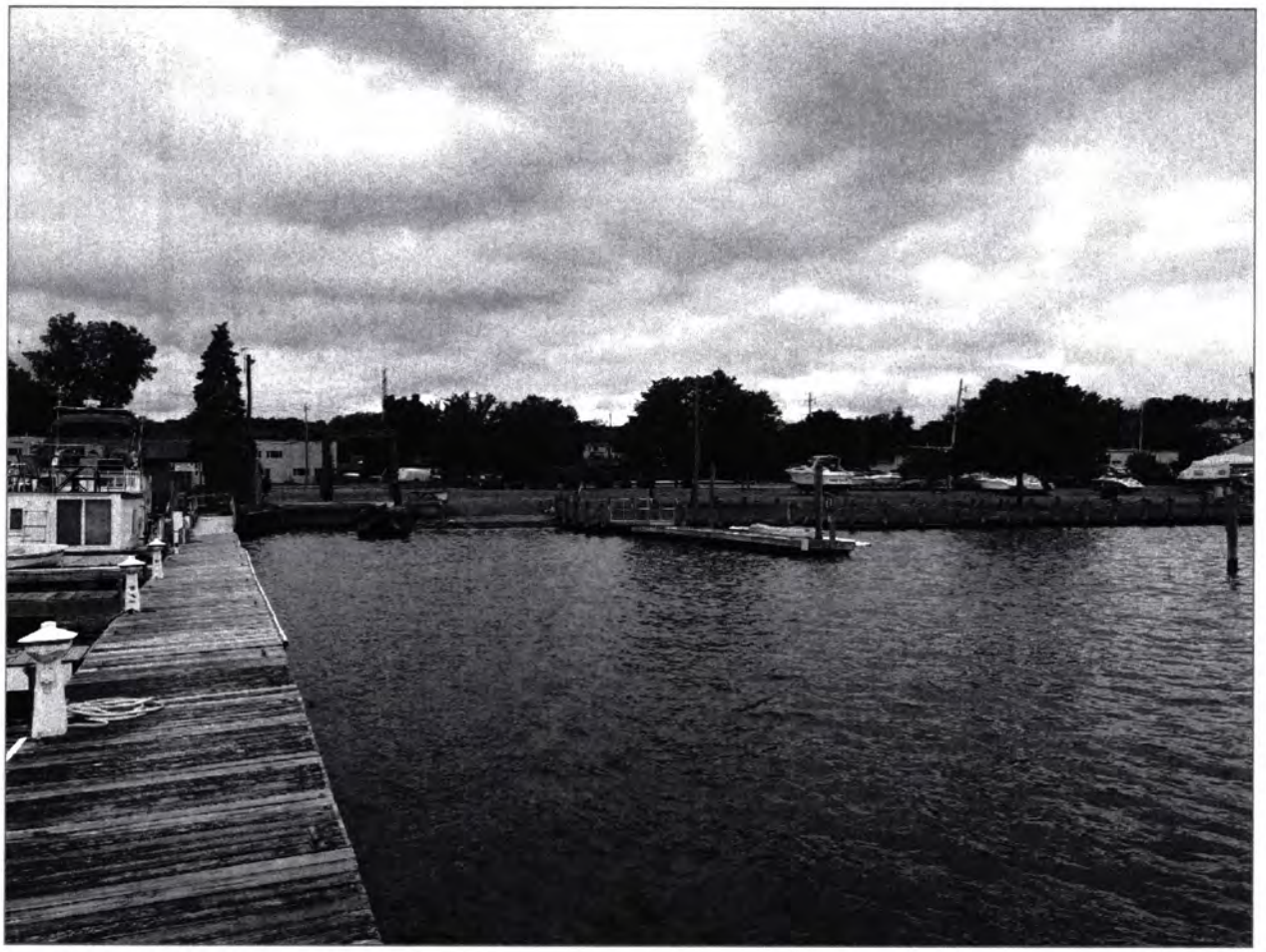

Photograph 6: Existing bulkhead and shoreline – Facing west.

Photograph 7: Existing timber bulkhead – Facing northwest.

Photograph 8: Existing timber bulkhead – Facing south.

Photograph 9: Existing timber bulkhead and marina floats – Facing north.

Photograph 10: Existing timber bulkhead and shoreline – Facing south.

Photograph 11: Northern property edge bordering the freshwater wetlands adjacent area – Facing northwest.

LOCATION MAPS, CHARTS AND DIAGRAMS

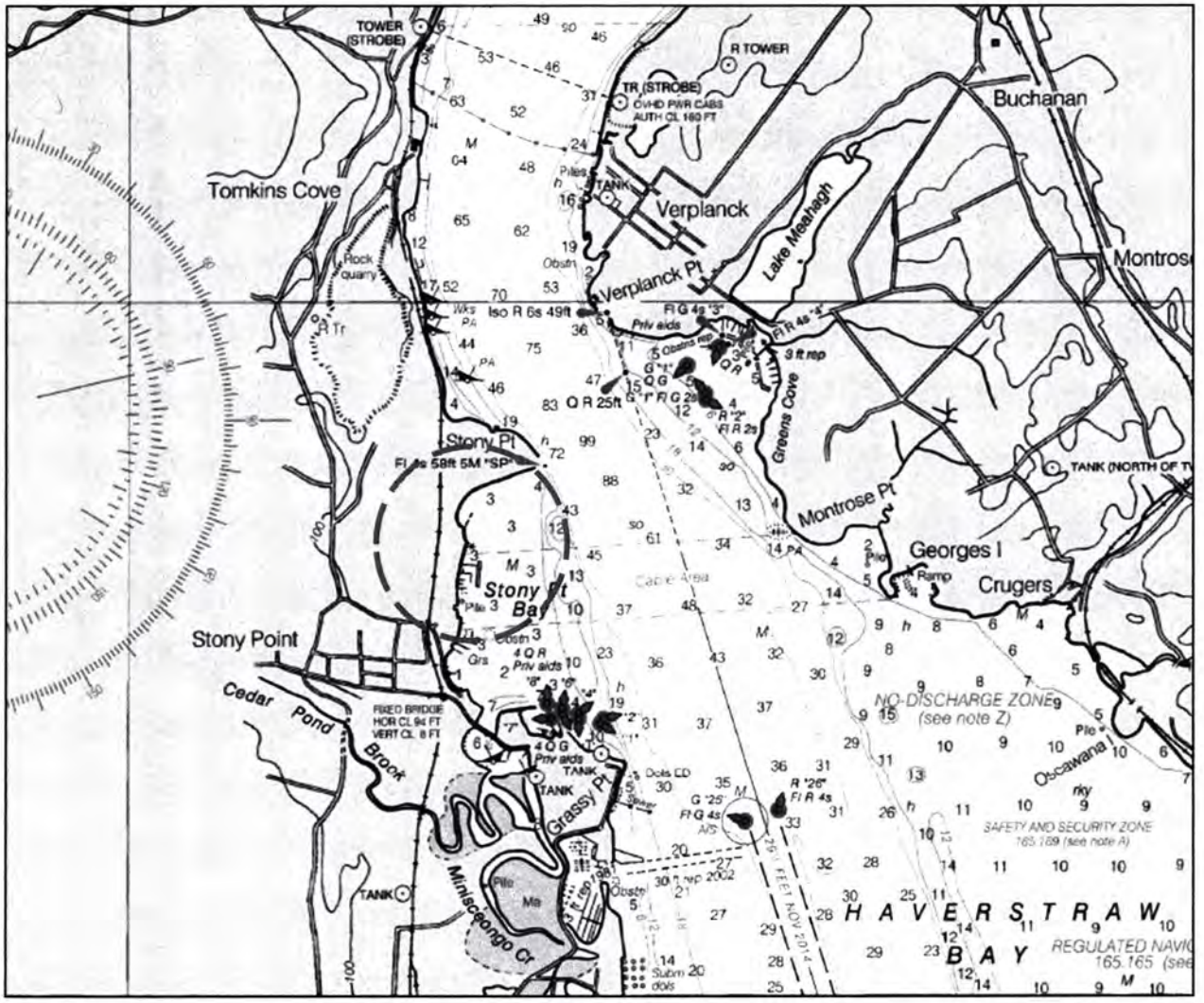

NOAA Chart 12343

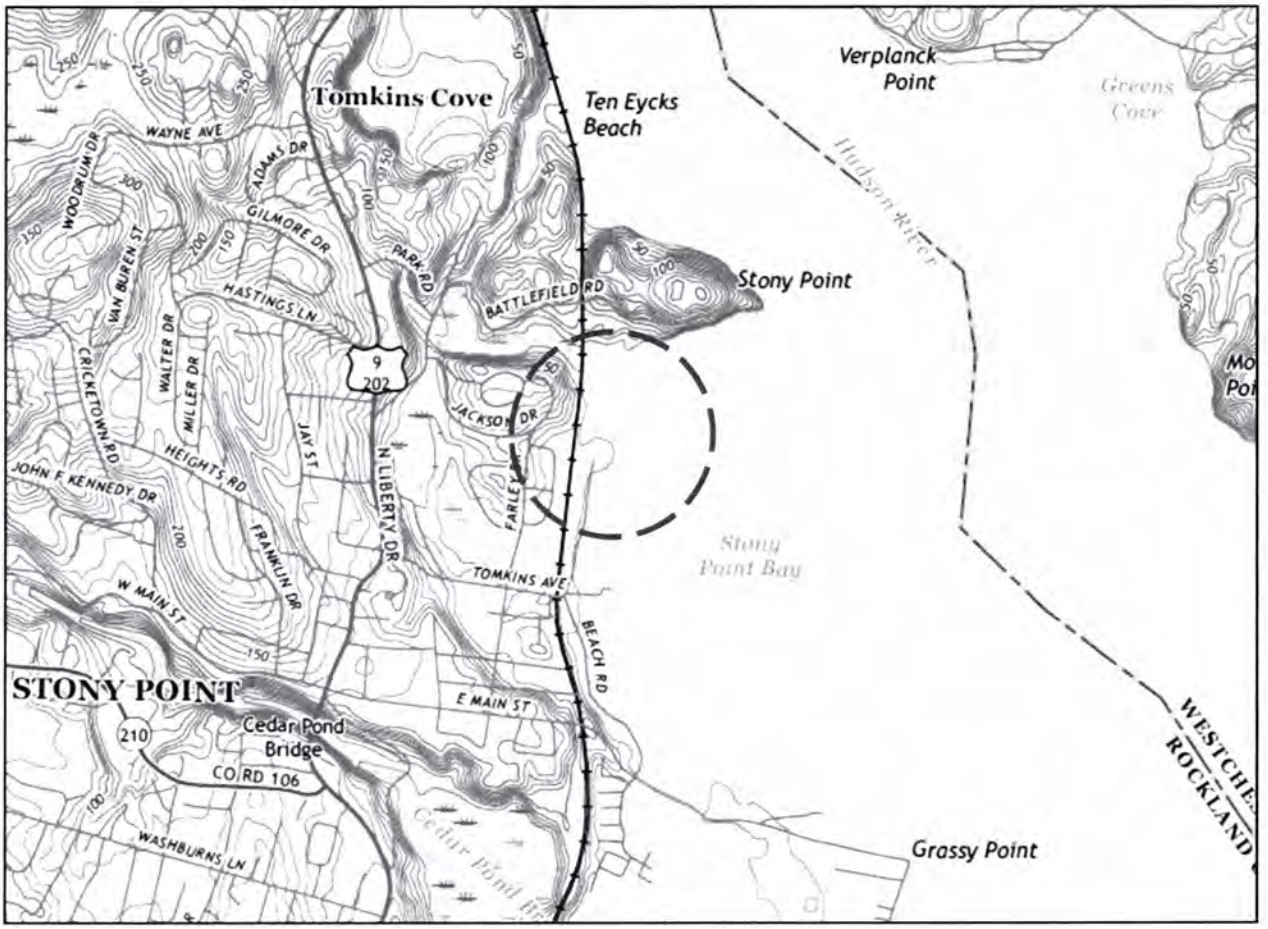

USGS Topographic Map

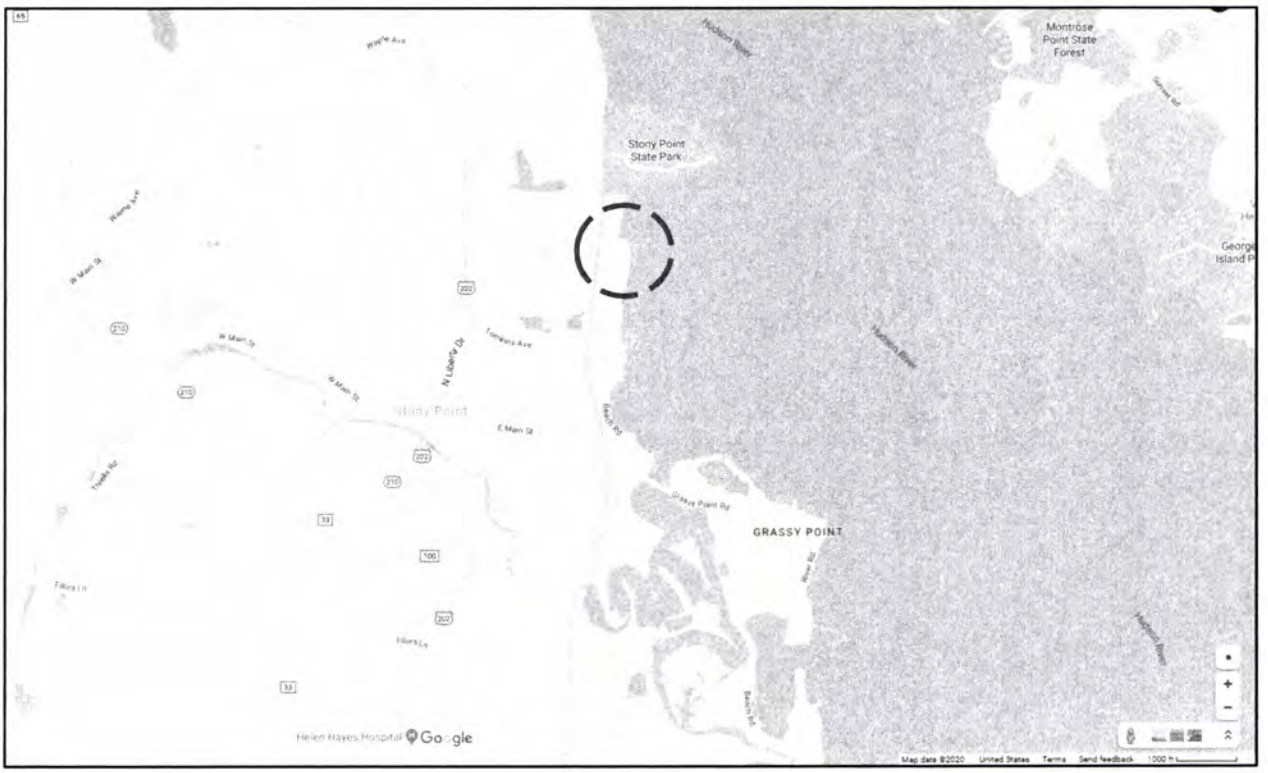

Street Map – Google Maps 2020

Aerial Photo – Google 2019

SUPPLEMENT: EAF MAPPER SUMMARY

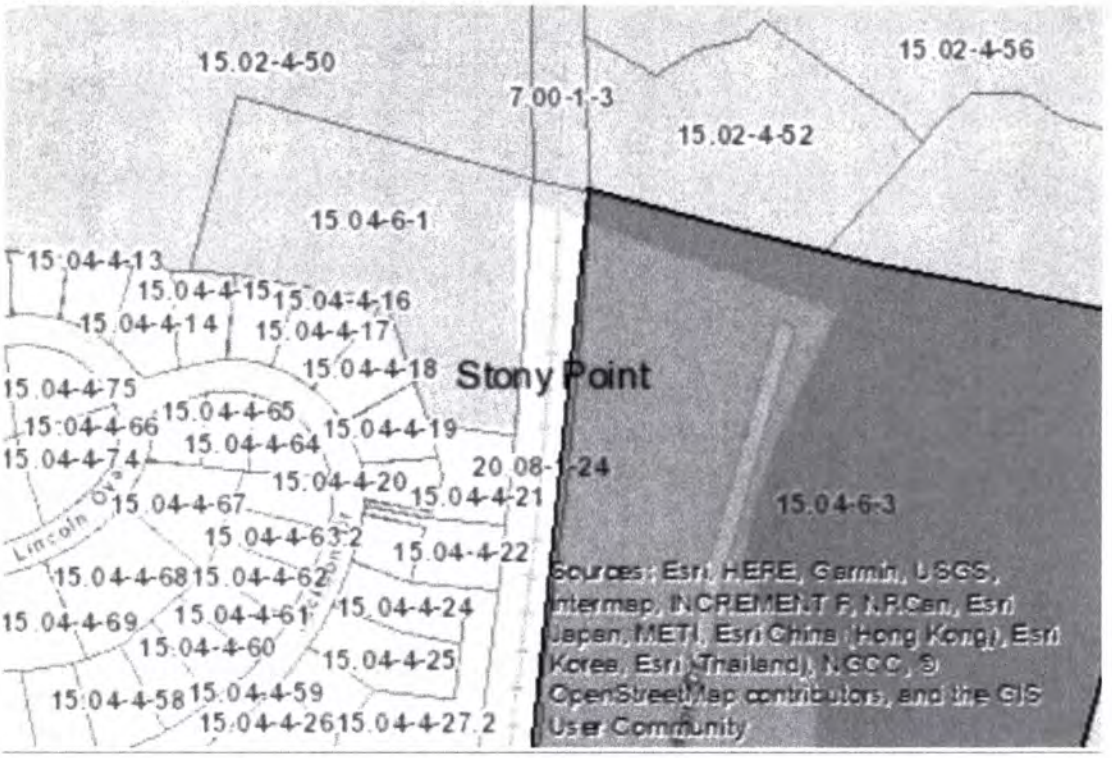

Disclaimer: The EAF Mapper is a screening tool intended to assist project sponsors and reviewing agencies in preparing an environmental assessment form (EAF). Not all questions asked in the EAF are answered by the EAF Mapper. Additional information on any EAF question can be obtained by consulting the EAF Workbooks. Although the EAF Mapper provides the most up-to-date digital data available to DEC, you may also need to contact local or other data sources in order to obtain data not provided by the Mapper. Digital data is not a substitute for agency determinations.

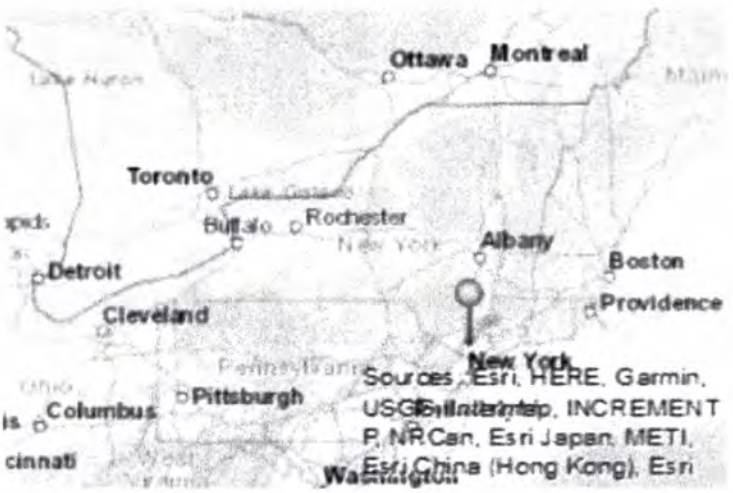

B.i.i [Coastal or Waterfront Area]	Yes
B.i.ii [Local Waterfront Revitalization Area]	Yes
C.2.b. [Special Planning District]	Yes - Digital mapping data are not available for all Special Planning Districts. Refer to EAF Workbook.
C.2.b. [Special Planning District - Name]	Remediaton Sites:546031
E.1.h [DEC Spills or Remediation Site - Potential Contamination History]	Yes - Digital mapping data for Spills Incidents are not available for this location. Refer to EAF Workbook.
E.1.h.i [DEC Spills or Remediation Site - Listed]	Yes
E.1.h.i [DEC Spills or Remediation Site - Environmental Site Remediation Database]	Yes
E.1.h.i [DEC Spills or Remediation Site - DEC ID Number]	546031
E.1.h.iii [Within 2,000' of DEC Remediation Site]	Yes
E.1.h.iii [Within 2,000' of DEC Remediation Site - DEC ID]	546031
E.2.g [Unique Geologic Features]	No
E.2.h.i [Surface Water Features]	Yes
E.2.h.ii [Surface Water Features]	Yes
E.2.h.iii [Surface Water Features]	Yes - Digital mapping information on local and federal wetlands and waterbodies is known to be incomplete. Refer to EAF Workbook.
E.2.h.iv [Surface Water Features - Stream Name]	864-2, 864-546
E.2.h.iv [Surface Water Features - Stream Classification]	SB, SC / C
E.2.h.iv [Surface Water Features - Wetlands Name]	Federal Waters, NYS Wetland

E.2.h.iv [Surface Water Features - Wetlands Size]	NYS Wetland (in acres):19.9
E.2.h.iv [Surface Water Features - DEC Wetlands Number]	HS-2
E.2.h.v [Impaired Water Bodies]	Yes
E.2.h.v [Impaired Water Bodies - Name and Basis for Listing]	Name - Pollutants - Uses:Hudson River (Class SB), portion – Priority Organics – Fish Consumption
E.2.i. [Floodway]	Yes
E.2.j. [100 Year Floodplain]	Yes
E.2.k. [500 Year Floodplain]	Yes
E.2.l. [Aquifers]	No
E.2.n. [Natural Communities]	Yes
E.2.n.i [Natural Communities - Name]	Tidal River
E.2.n.i [Natural Communities - Acres]	74248.64
E.2.o. [Endangered or Threatened Species]	Yes
E.2.o. [Endangered or Threatened Species - Name]	Shortnose Sturgeon, Bald Eagle, Atlantic Sturgeon
E.2.p. [Rare Plants or Animals]	No
E.3.a. [Agricultural District]	No
E.3.c. [National Natural Landmark]	No
E.3.d [Critical Environmental Area]	No
E.3.e. [National Register of Historic Places]	Yes - Digital mapping data for archaeological site boundaries are not available. Refer to EAF Workbook.
E.3.e.ii [National Register of Historic Places - Name]	Stony Point Battlefield
E.3.f. [Archeological Sites]	Yes
E.3.i. [Designated River Corridor]	No

SUPPLEMENT: LIST OF REMEDIATION SITES

The New York State Department of Environmental Conservation Environmental Site Remediation Database indicated no records found for the project site.

9/6/2018 Environmental Site Remediation Database Search

NEW YORK STATE OF OPPORTUNITY | Department of Environmental Conservation

Environmental Site Remediation Database Search Details

Site Record

For more Information: E-mail Us

Refine This Search

SUPPLEMENT: EAF MAPPER SUMMARY

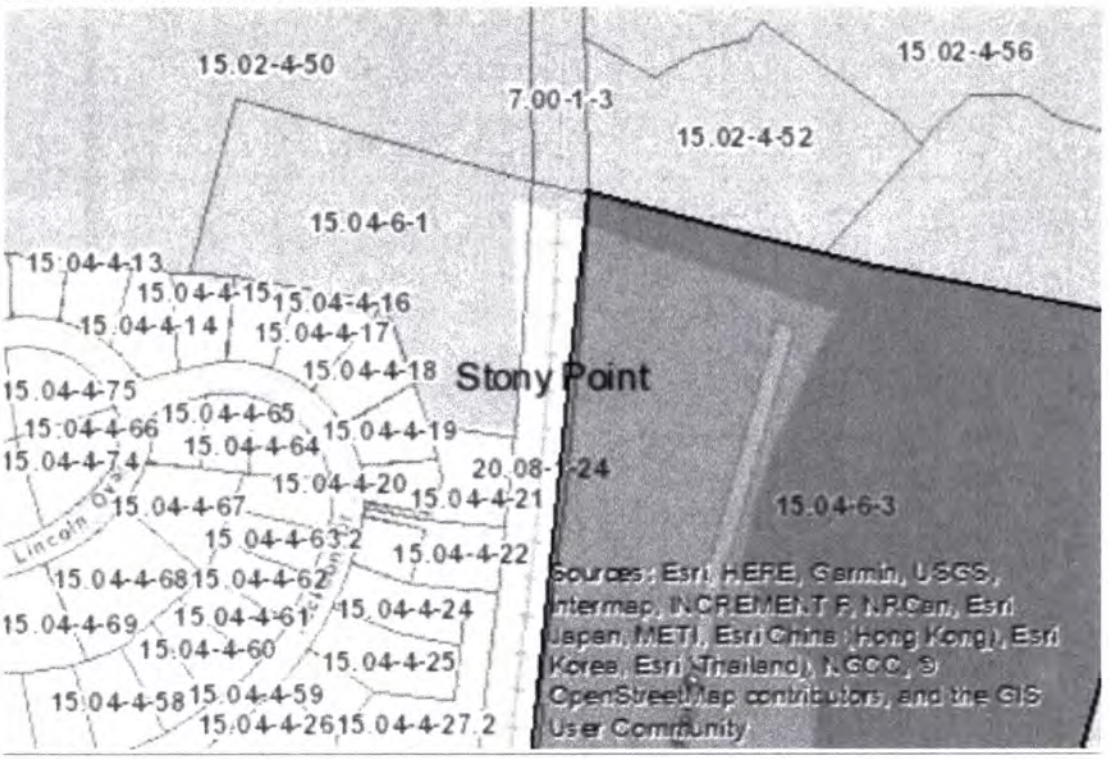

Disclaimer: The EAF Mapper is a screening tool intended to assist project sponsors and reviewing agencies in preparing an environmental assessment form (EAF). Not all questions asked in the EAF are answered by the EAF Mapper. Additional information on any EAF question can be obtained by consulting the EAF Workbooks. Although the EAF Mapper provides the most up-to-date digital data available to DEC, you may also need to contact local or other data sources in order to obtain data not provided by the Mapper. Digital data is not a substitute for agency determinations.

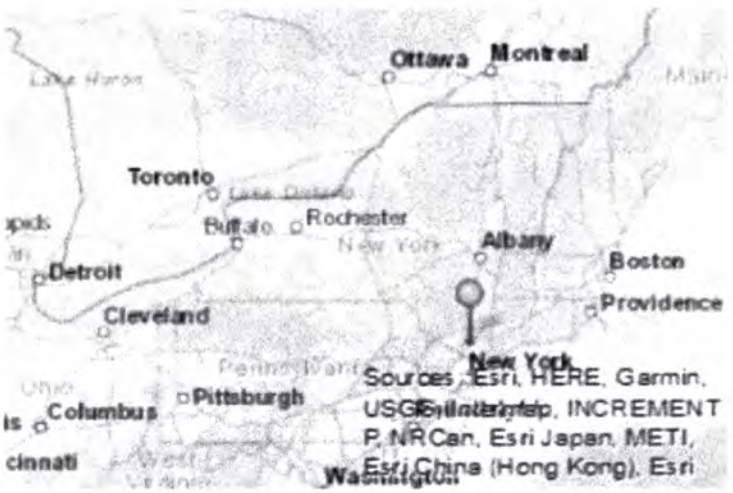

B.i.i [Coastal or Waterfront Area]	Yes
B.i.ii [Local Waterfront Revitalization Area]	Yes
C.2.b. [Special Planning District]	Yes - Digital mapping data are not available for all Special Planning Districts. Refer to EAF Workbook.
C.2.b. [Special Planning District - Name]	Remediaton Sites:546031
E.1.h [DEC Spills or Remediation Site - Potential Contamination History]	Yes - Digital mapping data for Spills Incidents are not available for this location. Refer to EAF Workbook.
E.1.h.i [DEC Spills or Remediation Site - Listed]	Yes
E.1.h.i [DEC Spills or Remediation Site - Environmental Site Remediation Database]	Yes
E.1.h.i [DEC Spills or Remediation Site - DEC ID Number]	546031
E.1.h.iii [Within 2,000' of DEC Remediation Site]	Yes
E.1.h.iii [Within 2,000' of DEC Remediation Site - DEC ID]	546031
E.2.g [Unique Geologic Features]	No
E.2.h.i [Surface Water Features]	Yes
E.2.h.ii [Surface Water Features]	Yes
E.2.h.iii [Surface Water Features]	Yes - Digital mapping information on local and federal wetlands and waterbodies is known to be incomplete. Refer to EAF Workbook.
E.2.h.iv [Surface Water Features - Stream Name]	864-2, 864-546
E.2.h.iv [Surface Water Features - Stream Classification]	SB, SC / C
E.2.h.iv [Surface Water Features - Wetlands Name]	Federal Waters, NYS Wetland

E.2.h.iv [Surface Water Features - Wetlands Size]	NYS Wetland (in acres):19.9
E.2.h.iv [Surface Water Features - DEC Wetlands Number]	HS-2
E.2.h.v [Impaired Water Bodies]	Yes
E.2.h.v [Impaired Water Bodies - Name and Basis for Listing]	Name - Pollutants - Uses:Hudson River (Class SB), portion – Priority Organics – Fish Consumption
E.2.i. [Floodway]	Yes
E.2.j. [100 Year Floodplain]	Yes
E.2.k. [500 Year Floodplain]	Yes
E.2.l. [Aquifers]	No
E.2.n. [Natural Communities]	Yes
E.2.n.i [Natural Communities - Name]	Tidal River
E.2.n.i [Natural Communities - Acres]	74248.64
E.2.o. [Endangered or Threatened Species]	Yes
E.2.o. [Endangered or Threatened Species - Name]	Shortnose Sturgeon, Bald Eagle, Atlantic Sturgeon
E.2.p. [Rare Plants or Animals]	No
E.3.a. [Agricultural District]	No
E.3.c. [National Natural Landmark]	No
E.3.d [Critical Environmental Area]	No
E.3.e. [National Register of Historic Places]	Yes - Digital mapping data for archaeological site boundaries are not available. Refer to EAF Workbook.
E.3.e.ii [National Register of Historic Places - Name]	Stony Point Battlefield
E.3.f. [Archeological Sites]	Yes
E.3.i. [Designated River Corridor]	No

SUPPLEMENT: LIST OF REMEDIATION SITES

The New York State Department of Environmental Conservation Environmental Site Remediation Database indicated no records found for the project site.

9/6/2018 Environmental Site Remediation Database Search

NEW YORK STATE OF OPPORTUNITY | Department of Environmental Conservation

Environmental Site Remediation Database Search Details

Site Record

For more Information: E-mail Us

Refine This Search

EAGLE BAY SHORELINE & PUBLIC PIER

TOWN OF STONY POINT
ROCKLAND COUNTY, NEW YORK

TAX LOTS 15.04-6-3, 15.04-6-4, 15.04-6-4

ENVIRONMENTAL PERMIT APPROVALS SET
JUNE 30, 2020

VICINITY MAP
N.T.S.

DRAWING LIST	
DWG NO.	DWG NAME
T-000.00	TITLE SHEET
MR-100.00	EXISTING SITE PLAN
MR-101.00	EXISTING SECTIONS
MR-200.00	PROPOSED PLAN
MR-201.00	SHORELINE PART PLAN I
MR-202.00	SHORELINE PART PLAN II
MR-203.00	PROPOSED SECTIONS
MR-204.00	PROPOSED SECTIONS II
MR-210.00	PIER PART PLANS
MR-211.00	PIER SECTION & DETAILS I
MR-212.00	PIER SECTIONS & DETAILS II
MR-213.00	PIER ELEVATIONS
MR-301.00	CONSTRUCTION DETAILS

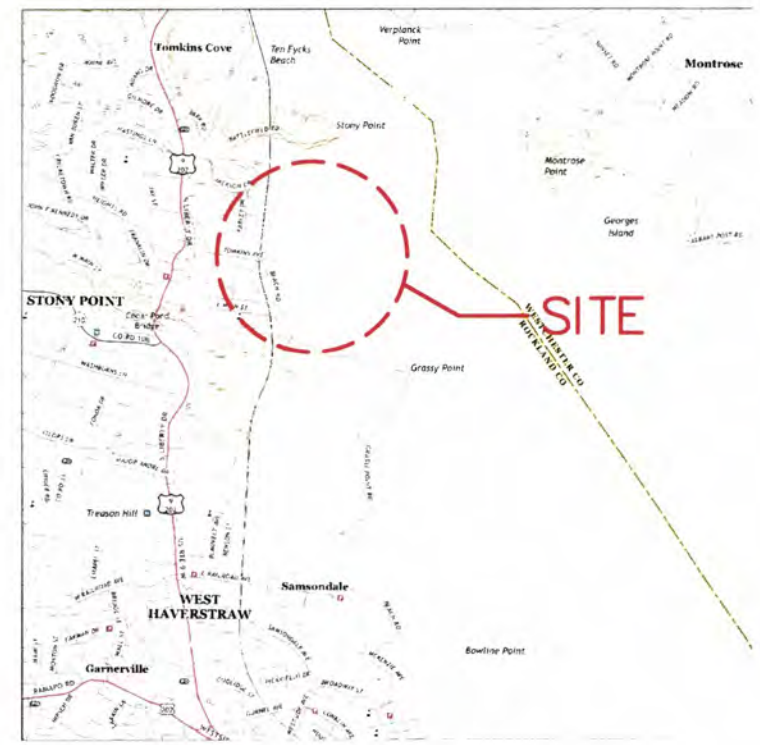

LOCATION MAP
N.T.S.

TMS WATERFRONT

EAGLE BAY SHORELINE & PUBLIC PIER
TOWN OF STONY POINT
ROCKLAND COUNTY, NEW YORK

No.	Date	Reason	By

TITLE SHEET

18003
N.T.S.
JUNE 25, 2020
DAZ
SET

T-000.00

01 13

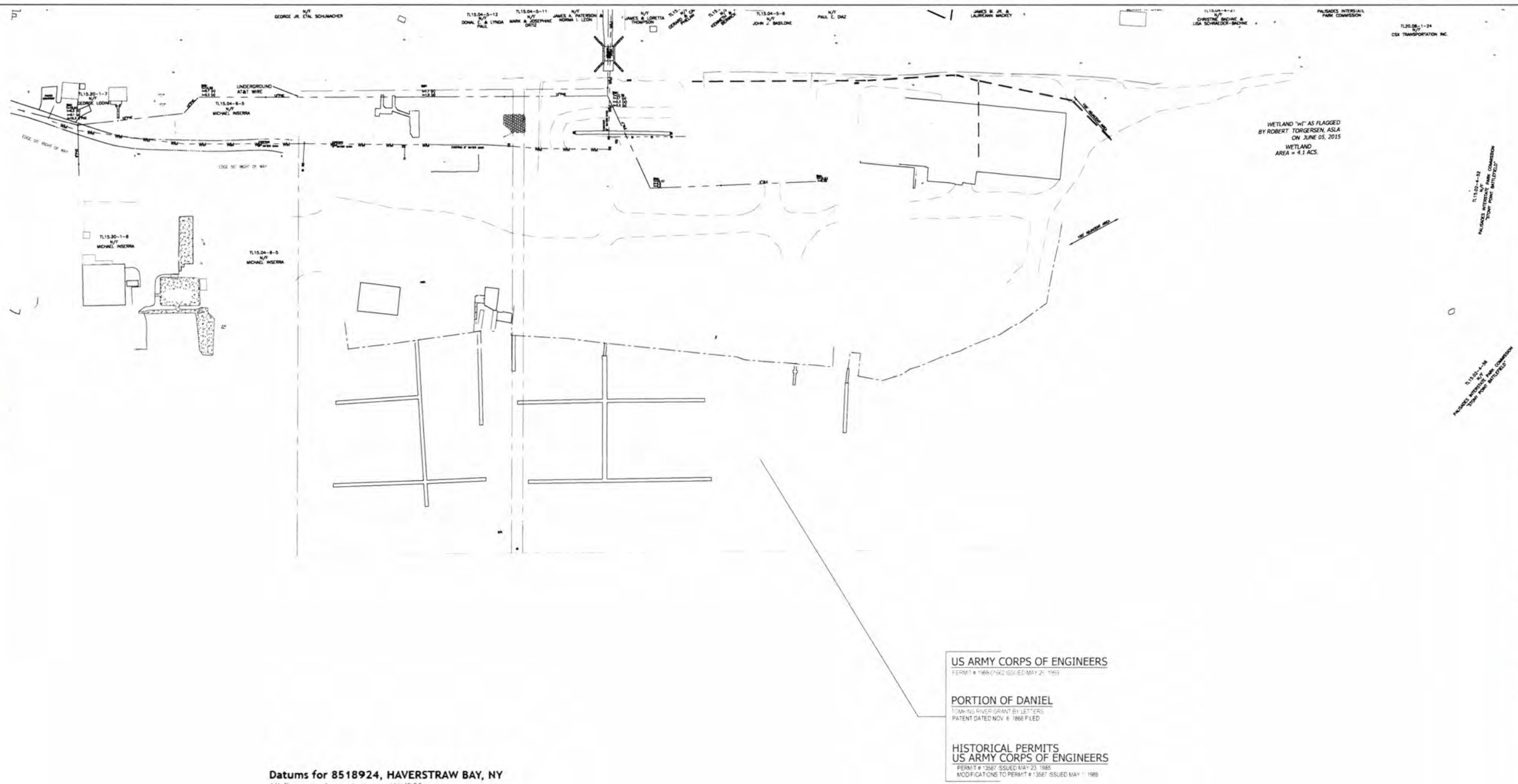

US ARMY CORPS OF ENGINEERS
PERMIT # 1984-(1)-62 ISSUED MAY 24, 1993

PORTION OF DANIEL
TOMKINS RIVER GRANT BY LETTERS
PATENT DATED NOV. 6, 1866 FILED

HISTORICAL PERMITS
US ARMY CORPS OF ENGINEERS
PERMIT # 13587 ISSUED MAY 23, 1985
MODIFICATIONS TO PERMIT # 13587 ISSUED MAY 11, 1988

Datums for 8518924, HAVERSTRAW BAY, NY

All figures in feet relative to NAVD88

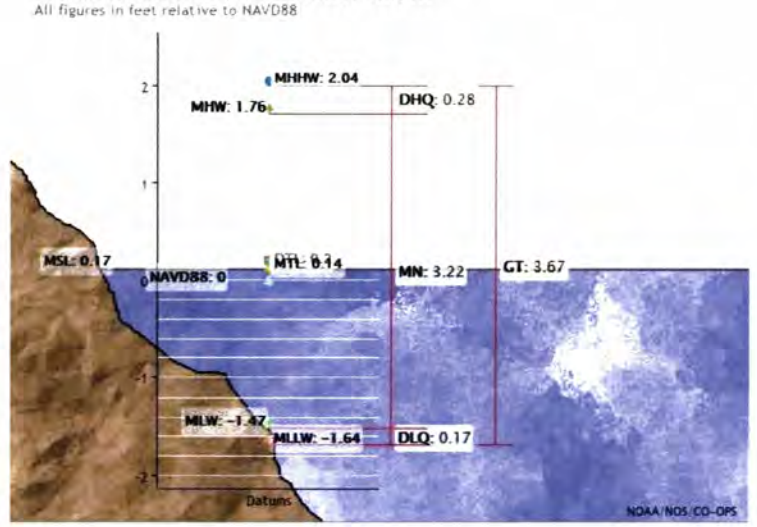

LEGEND

- EXISTING 1' CONTOUR
- EXISTING 2' CONTOUR
- EXISTING 10' CONTOUR
- EXISTING WATERLINE
- EXISTING WATER VALVE
- EXISTING FIRE HYDRANT
- EXISTING GAS LINE
- EXISTING GAS VALVE
- EXISTING CATCH BASIN
- EXISTING STORM DRAIN LINE
- EXISTING SEWER MANHOLE
- EXISTING SEWER LINE
- EXISTING SPOT ELEVATION
- EXISTING STONEWALL
- EXISTING UTILITY POLE
- EXISTING OVERHEAD WIRES
- EXISTING SIGN
- EXISTING FENCE

OWNER:

		SURVEY	ZONING CODE
TAX LOT 15.04-6-3	BREAKERS STONY POINT LP	AREA OF WETLAND: 1.2 ACS	1.2 ACS
	5 EASTVIEW ROAD	AREA OF LAND: 9.6 ACS	9.6 ACS
	MONSEY NEW YORK 10952	AREA OF WATER: 12.4 ACS	12.4 ACS
		AREA: 25.1 ACS	17.7 ACS
TAX LOT 15.04-6-4	BREAKERS STONY POINT LP	AREA OF LAND: 4.1 ACS	4.1 ACS
	5 EASTVIEW ROAD	AREA OF WATER: 8.2 ACS	4.1 ACS
	MONSEY NEW YORK 10952	AREA: 14.3 ACS	10.2 ACS
TAX LOT 15.04-6-6	BREAKERS STONY POINT LP	AREA OF LAND: 1.2 ACS	1.2 ACS
	5 EASTVIEW ROAD	AREA OF WATER: 0.0 ACS	0.0 ACS
	MONSEY NEW YORK 10952	AREA: 1.2 ACS	1.2 ACS
		TOTAL AREA: 41.0 ACS	29.1 ACS

TMS WATERFRONT

EAGLE BAY SHORELINE & PUBLIC PIER

TOWN OF STONY POINT
ROCKLAND COUNTY, NEW YORK

No.	Date	Reason	By

EXISTING SITE PLAN

Job No.	18003
Scale	1" = 200'
Date	JUNE 25, 2020
Drawn By	DAZ
Checked By	SET

MR-100.00

02 13

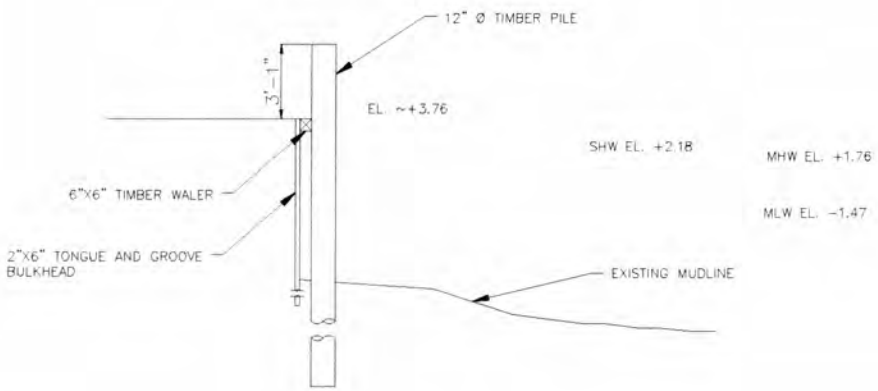

A / MR-101 SECTION THROUGH EXISTING BULKHEAD

SCALE 1/8" = 1'

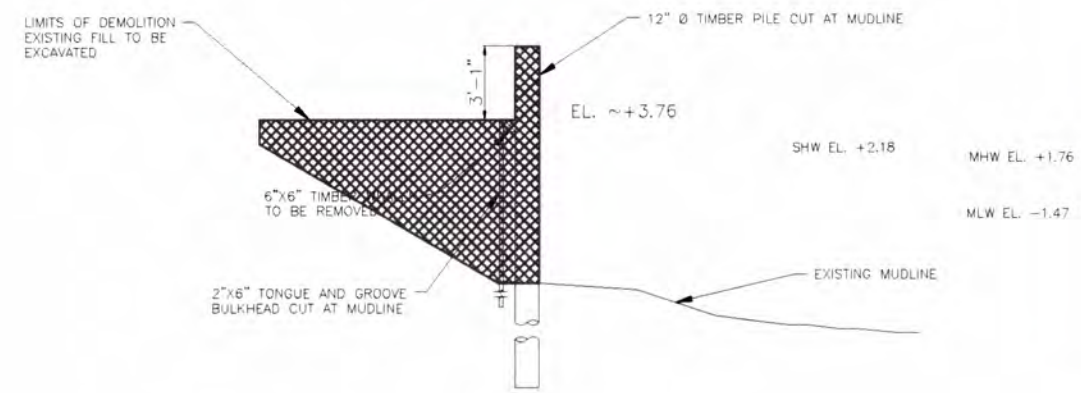

B / MR-101 DEMOLITION SECTION THROUGH EXISTING BULKHEAD

SCALE 1/8" = 1'

NOTE:
TOTAL REMOVALS BELOW MHW: APPROX. 43,022 CF
OR 1593.4 CY.

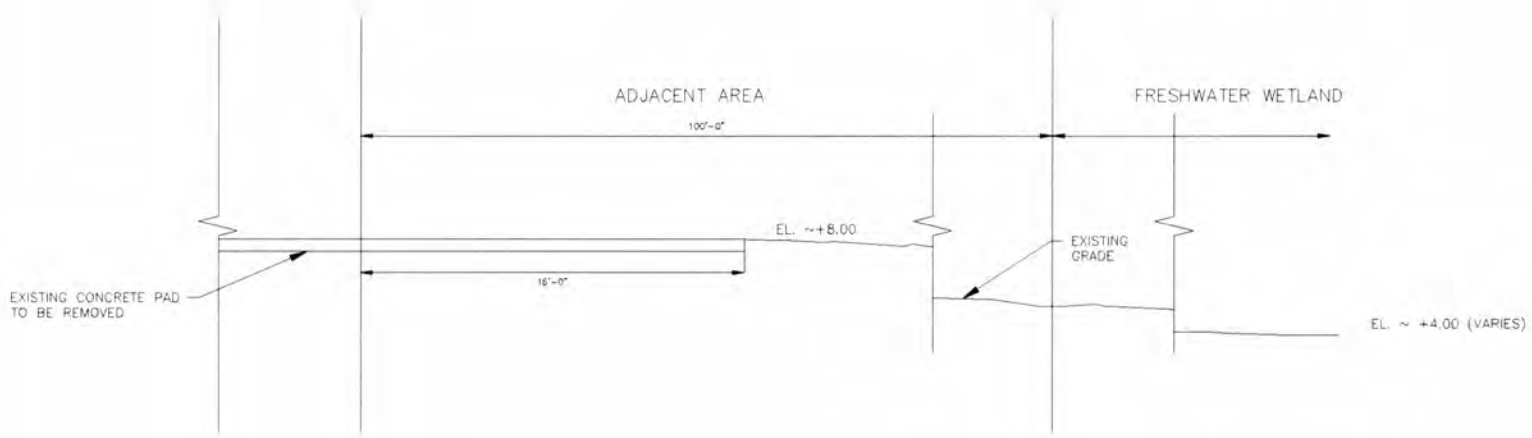

C / MR-101 SECTION THROUGH EXISTING FRESHWATER WETLAND

SCALE 1/8" = 1'

TMS WATERFRONT

EAGLE BAY
SHORELINE &
PUBLIC PIER

TOWN OF STONY POINT
ROCKLAND COUNTY, NEW YORK

No.	Date	Reason	By

EXISTING
SECTIONS

Project No.	18003
Scale	1" = 8'
Date	JUNE 25, 2020
Drawn By	DAZ
Reviewed By	SET

MR-101.00

03 of 13 Sheets

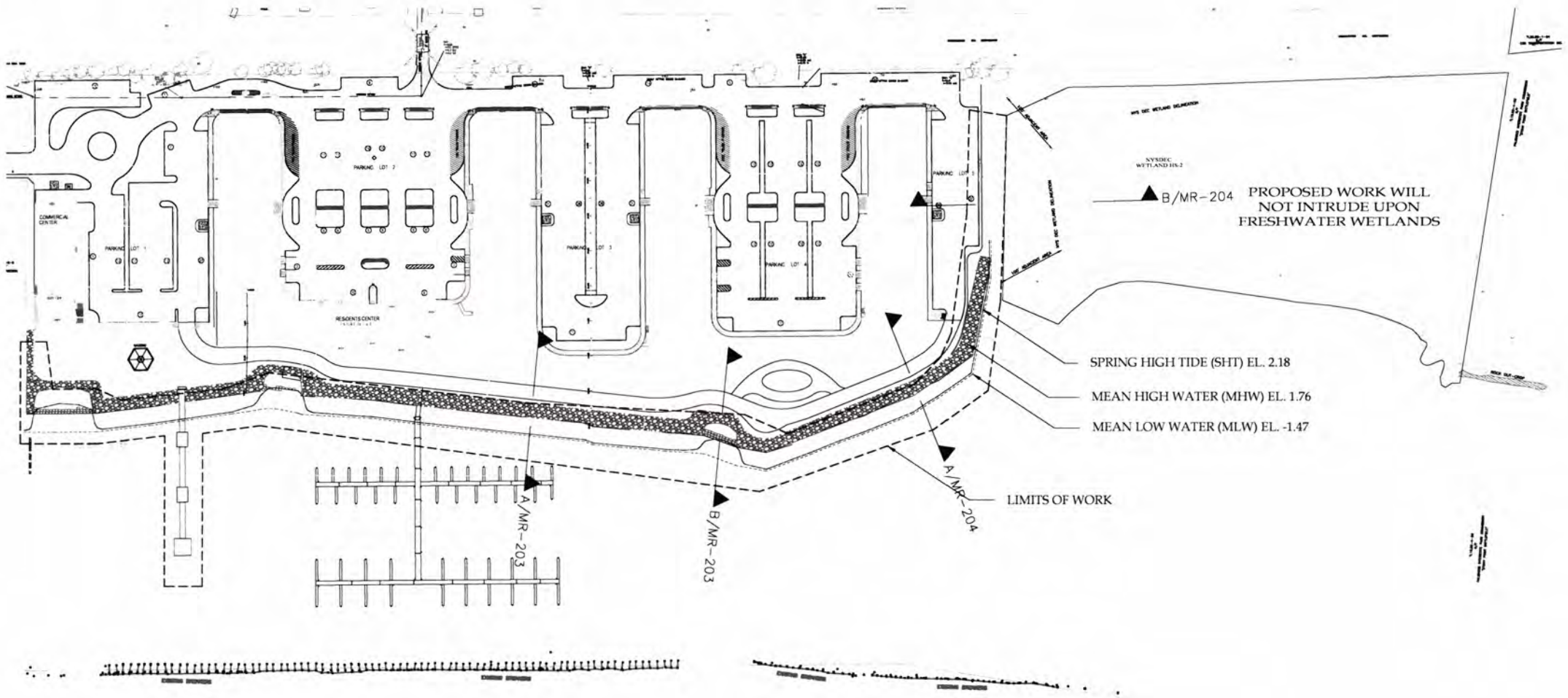

Datums for 8518924, HAVERSTRAW BAY, NY

All figures in feet relative to NAVD88

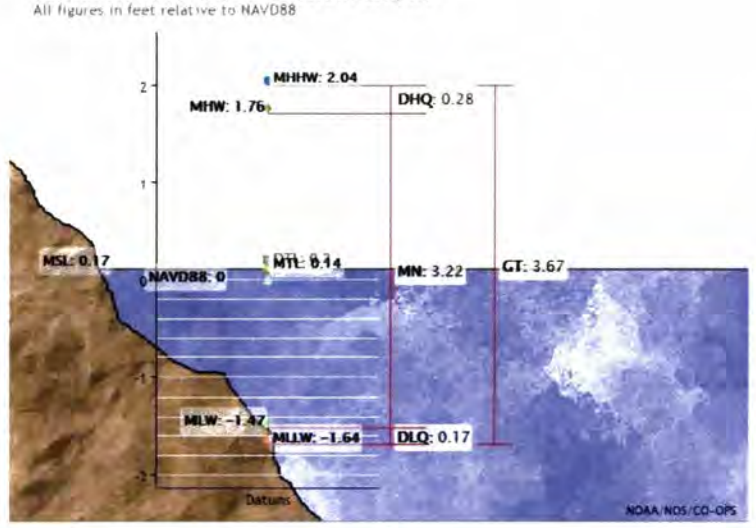

LEGEND

- SPRING HIGH TIDE (SHT)
- MEAN HIGH WATER (MHW)
- MEAN LOW WATER (MLW)

TMS WATERFRONT

EAGLE BAY SHORELINE & PUBLIC PIER

TOWN OF STONY POINT
ROCKLAND COUNTY, NEW YORK

No.	Date	Reason	By

PROPOSED PLAN

	18003
	1" = 200'
	JUNE 25, 2020
	DAZ
	SET

MR-200.00

04 13

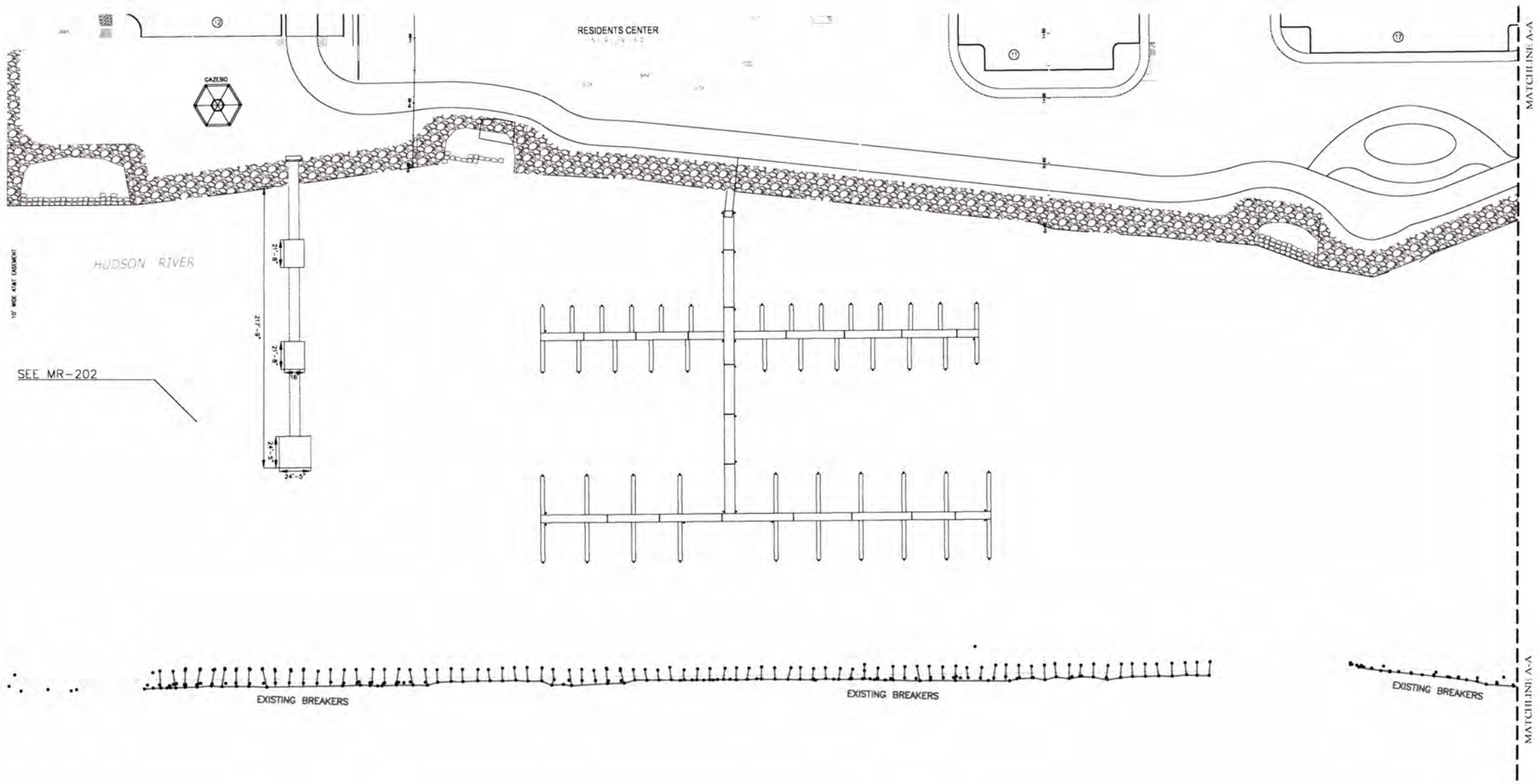

TMS WATERFRONT

EAGLE BAY SHORELINE & PUBLIC PIER

TOWN OF STONY POINT
ROCKLAND COUNTY, NEW YORK

No.	Date	Reason	By

SHORELINE PART PLAN I

	18003
	1" = 100'
	JUNE 25, 2020
	DAZ
	SET

MR-201.00

05 13

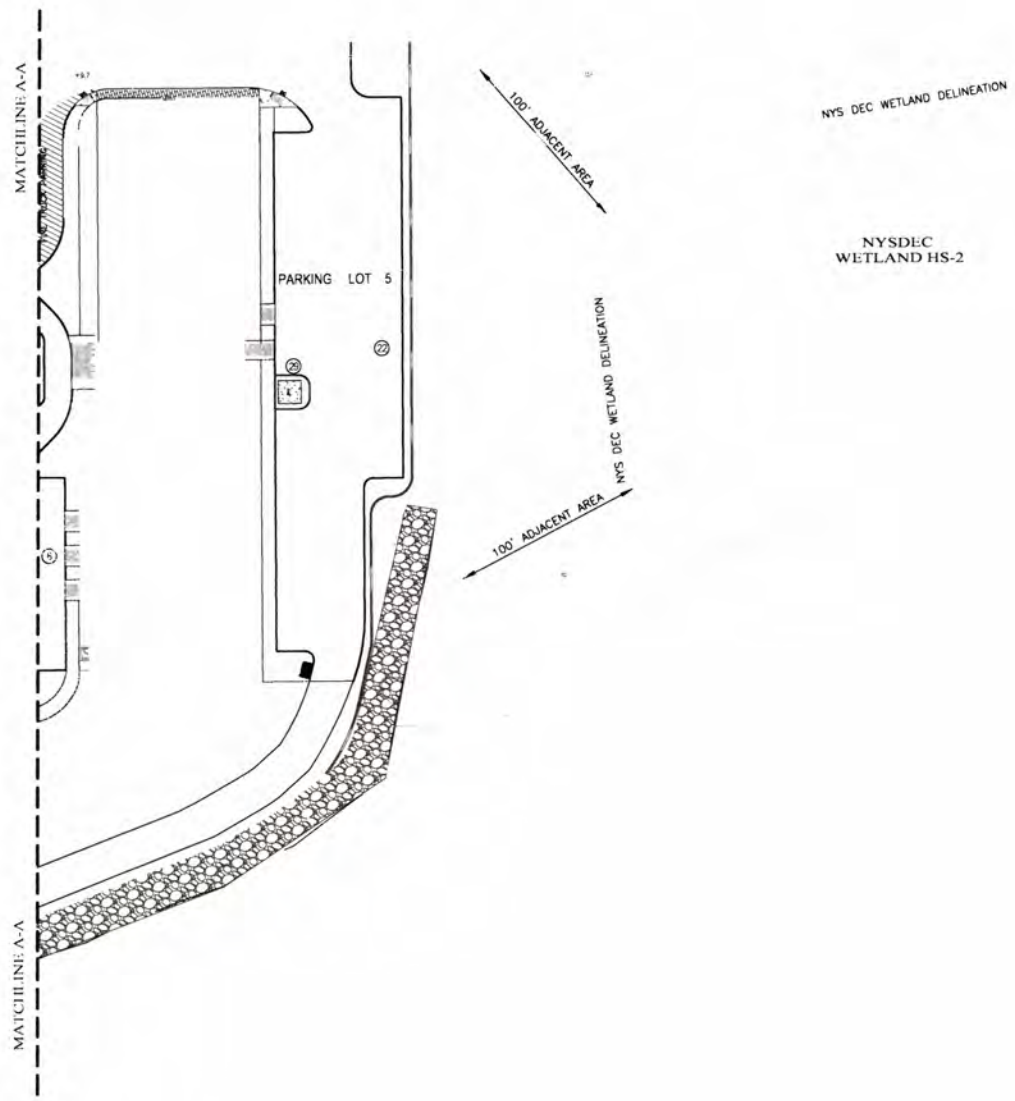

TMS WATERFRONT

EAGLE BAY SHORELINE & PUBLIC PIER

TOWN OF STONY POINT
ROCKLAND COUNTY, NEW YORK

No.	Date	Reason	By

SHORELINE PART PLAN II

	18003
	1" = 100'
	JUNE 25, 2020
	DAZ
	SET

MR-202.00

06 13

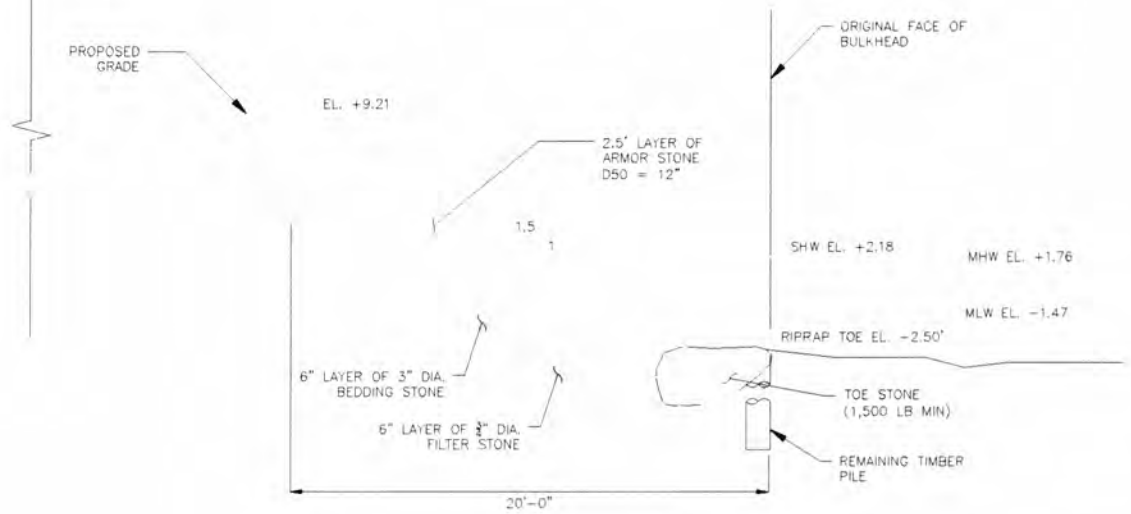

A MR-203 TYP. SECTION THROUGH PROPOSED REVETMENT

SCALE 1/8" = 1'

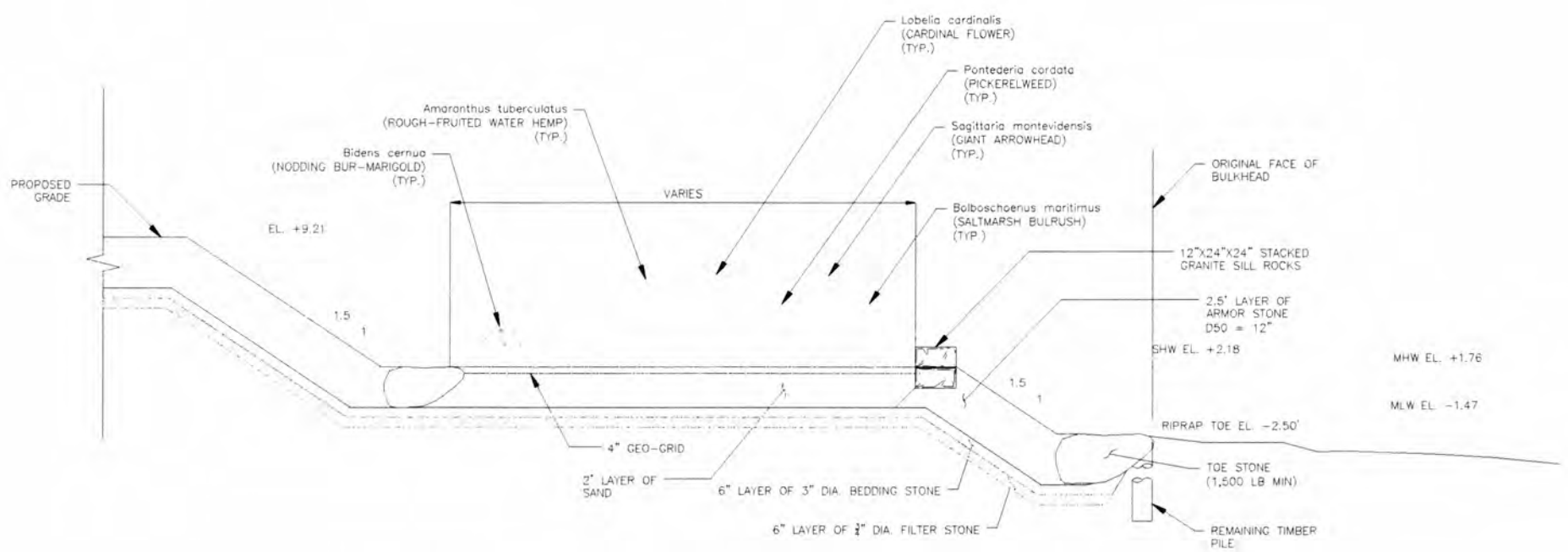

B MR-203 TYP. SECTION THROUGH TIDAL POOL

SCALE 1/8" = 1'

TMS WATERFRONT

EAGLE BAY SHORELINE & PUBLIC PIER

TOWN OF STONY POINT
ROCKLAND COUNTY, NEW YORK

No.	Date	Reason	By

PROPOSED SECTIONS I

Project No.	18003
Scale	1" = 8'
Date	JUNE 25, 2020
Drawn By	DAZ
Reviewed By	SET

MR-203.00

07 of 13 Sheets

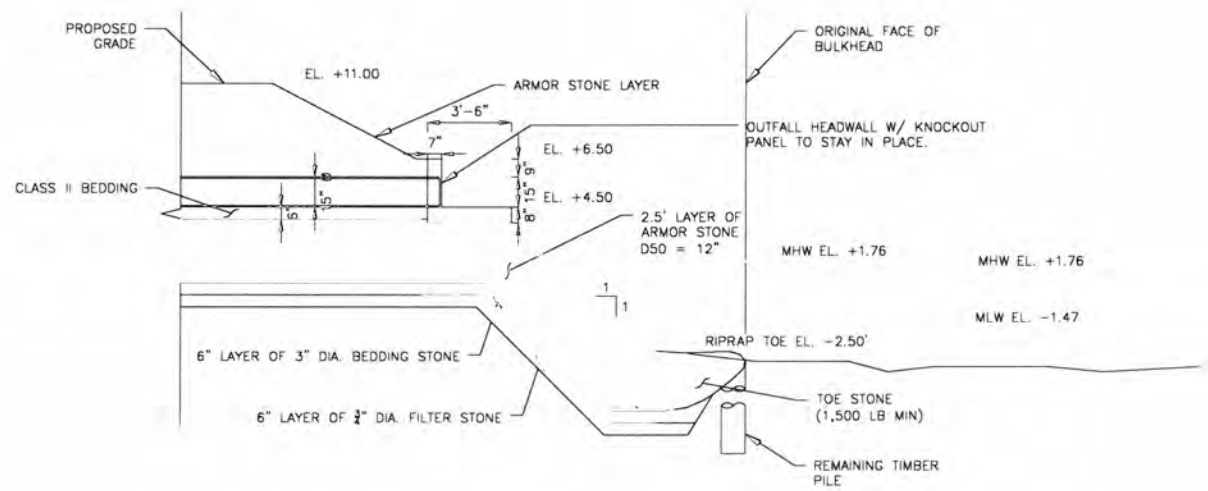

A / MR-204 TYP. SECTION THROUGH OUTFALL

SCALE 1/8" = 1'

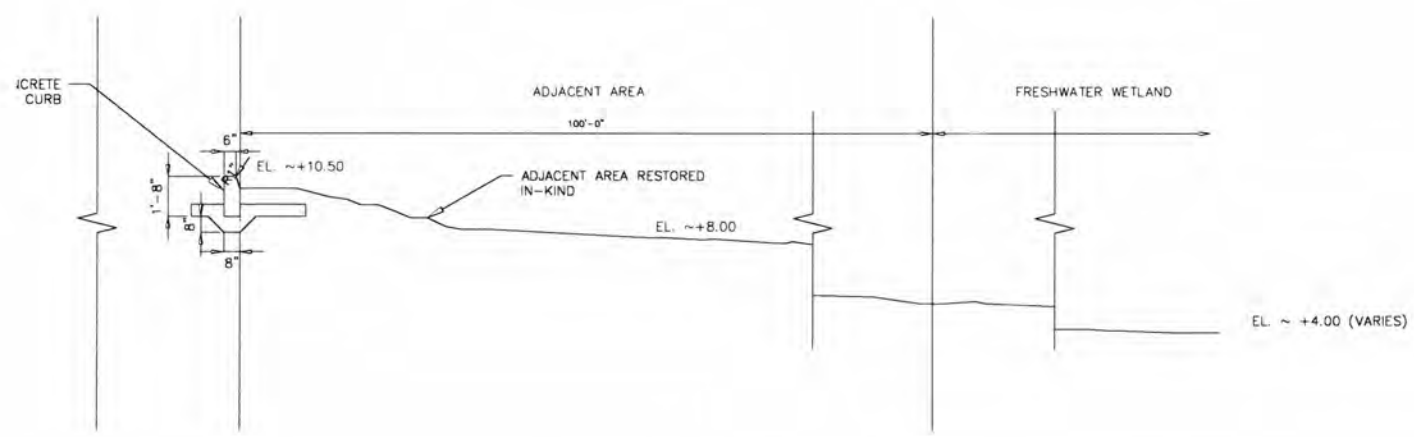

B / MR-204 TYP. SECTION THROUGH RESTORED ADJACENT AREA

SCALE 1/8" = 1'

TMS WATERFRONT

EAGLE BAY SHORELINE & PUBLIC PIER

TOWN OF STONY POINT
ROCKLAND COUNTY, NEW YORK

No.	Date	Reason	By

PROPOSED SECTIONS II

18003
1" = 8'
JUNE 25, 2020
DAZ
SET

MR-204.00

08 13

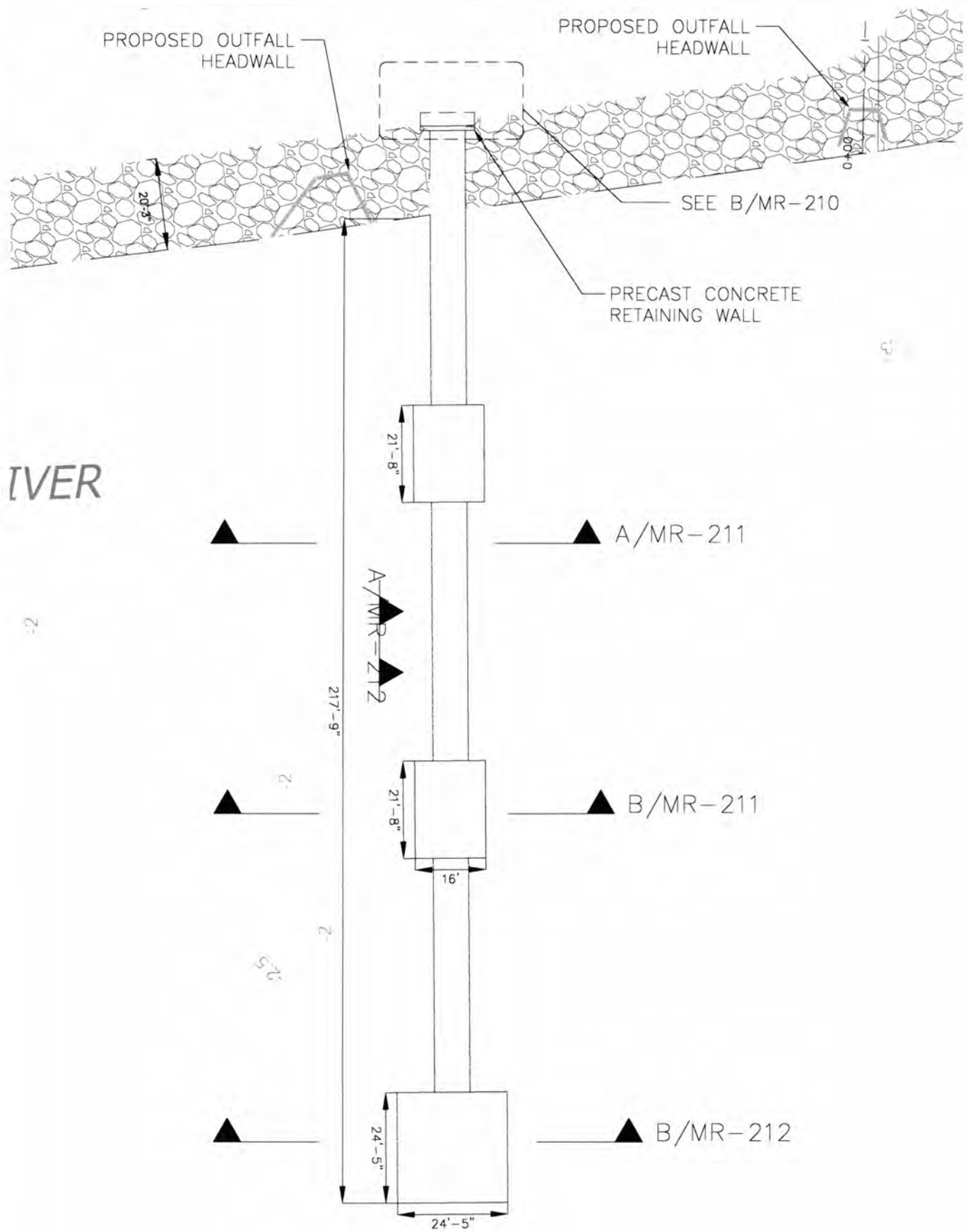

A MR-204 PIER PLAN
SCALE 1" = 30'

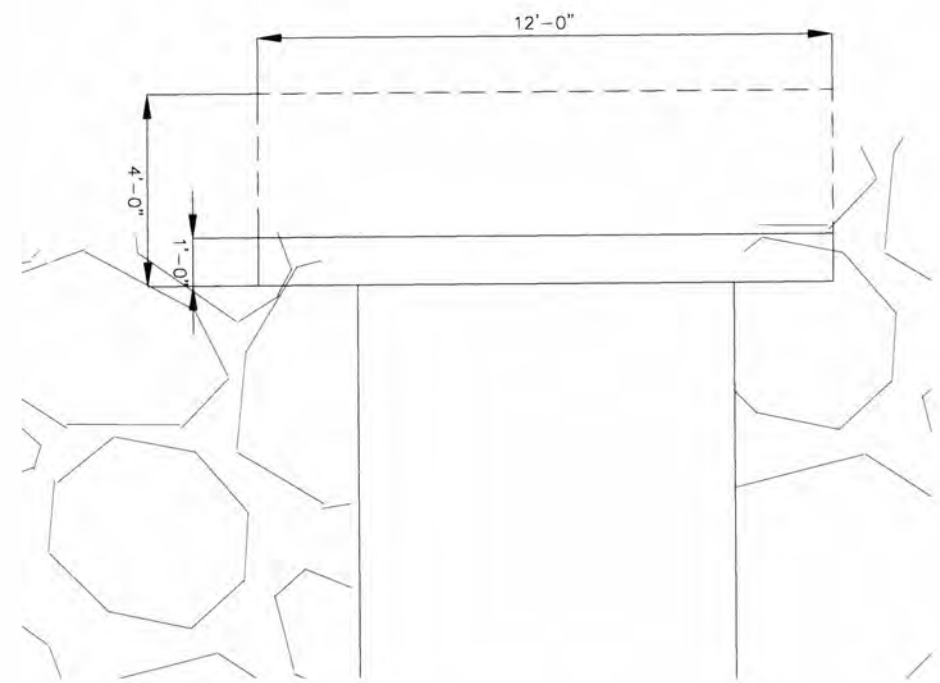

B MR-210 RETAINING WALL PLAN
SCALE 1/4" = 1'

TMS WATERFRONT

EAGLE BAY SHORELINE & PUBLIC PIER

TOWN OF STONY POINT
ROCKLAND COUNTY, NEW YORK

No.	Date	Reason	By

PIER PART PLANS

	18003
	AS NOTED
	JUNE 25, 2020
	DAZ
	SET

MR-210.00

09 13

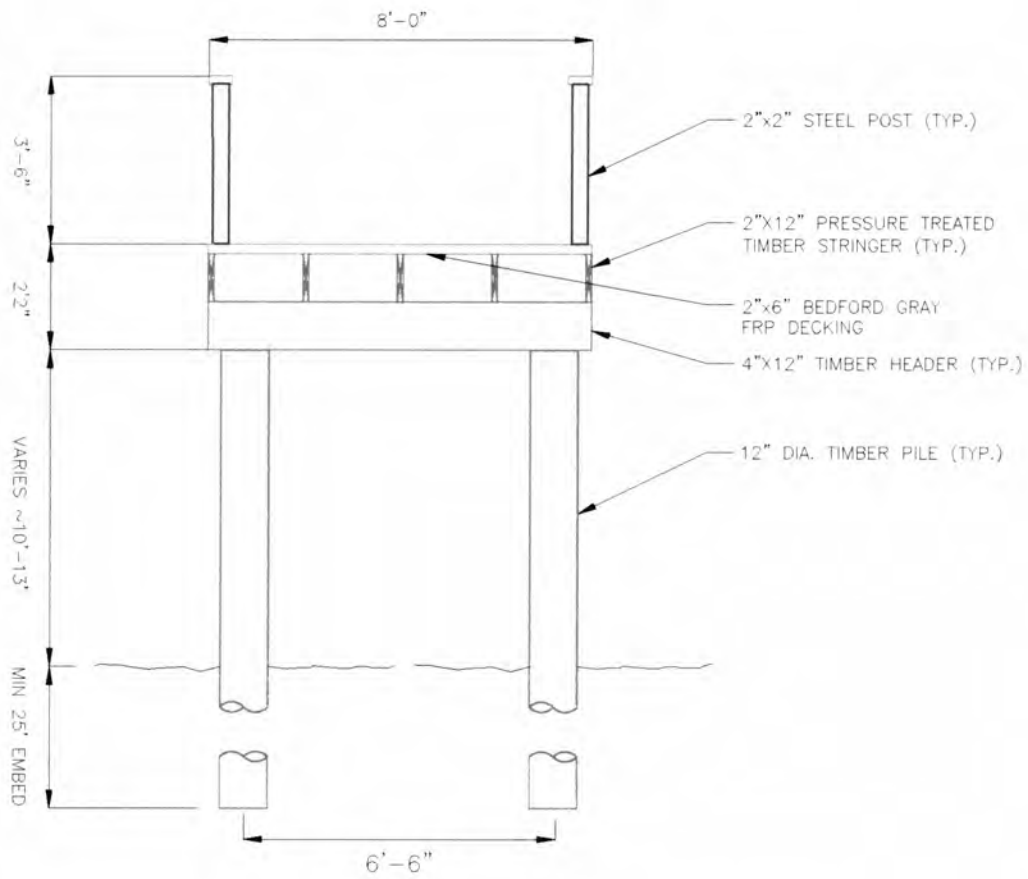

A MR-211 TYPICAL SECTION THROUGH FIXED PIER

SCALE 1/4" = 1'

NOTE:
VERTICAL LENGTH OF PILES COMPRESSED AND NOT TO SCALE.

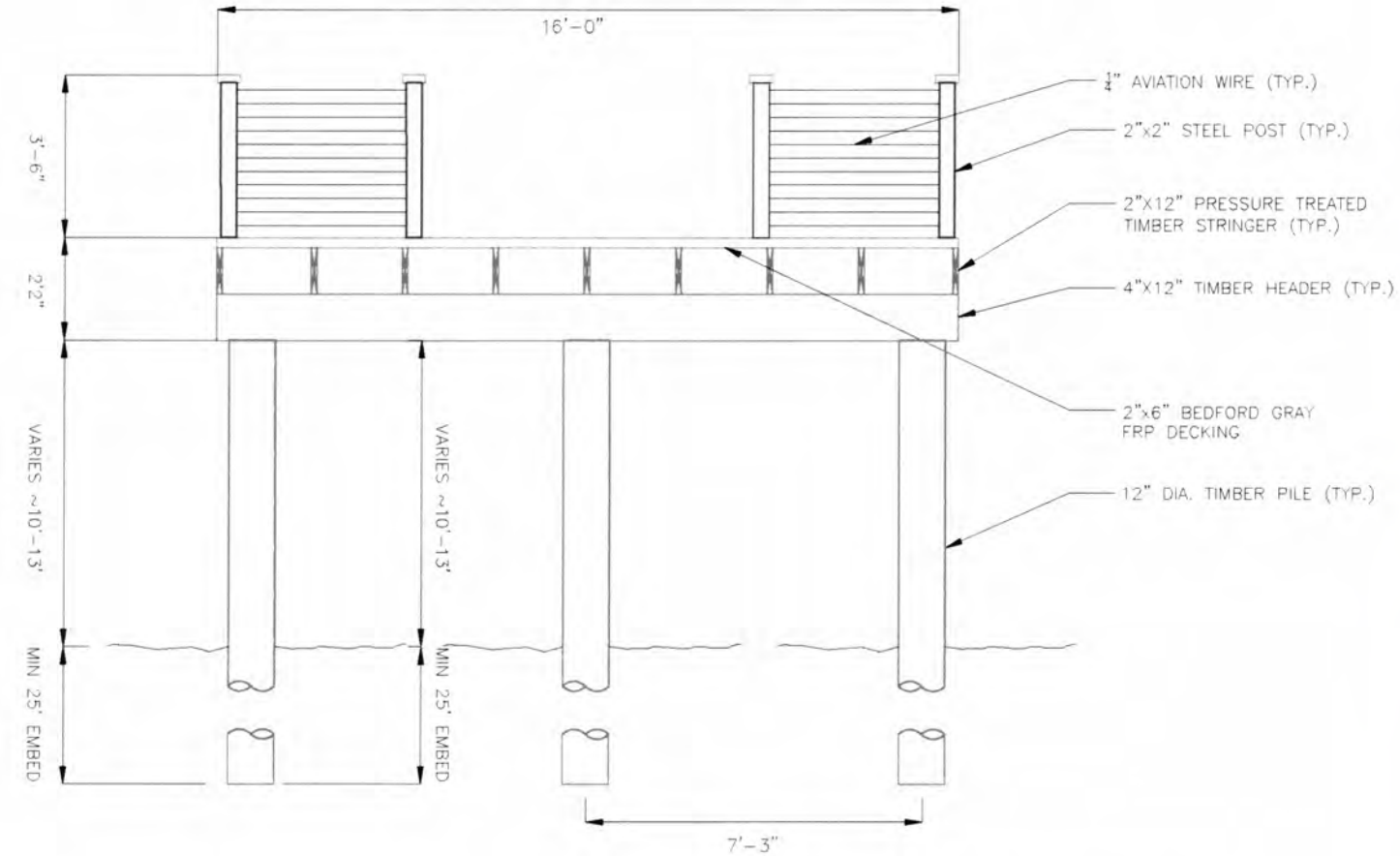

B MR-211 TYPICAL SECTION THROUGH WIDENED NODE

SCALE 1/4" = 1'

NOTE:
VERTICAL LENGTH OF PILES COMPRESSED AND NOT TO SCALE.

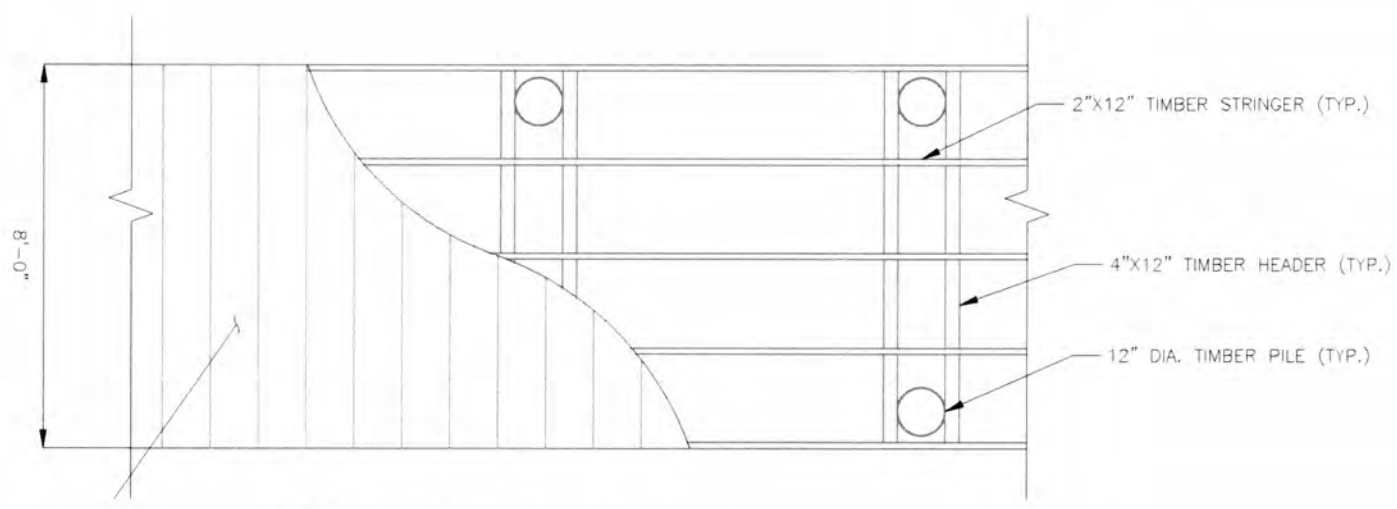

C MR-204 TYPICAL FRAMING PLAN

SCALE 1/4" = 1'

TMS WATERFRONT

EAGLE BAY SHORELINE & PUBLIC PIER

TOWN OF STONY POINT
ROCKLAND COUNTY, NEW YORK

No.	Date	Reason	By

PIER SECTION & DETAILS I

Project No.	18003
Scale	1" = 4'
Date	JUNE 25, 2020
Drawn By	DAZ
Checked By	SET

Drawing No.

MR-211.00

03 of 13 Sheets

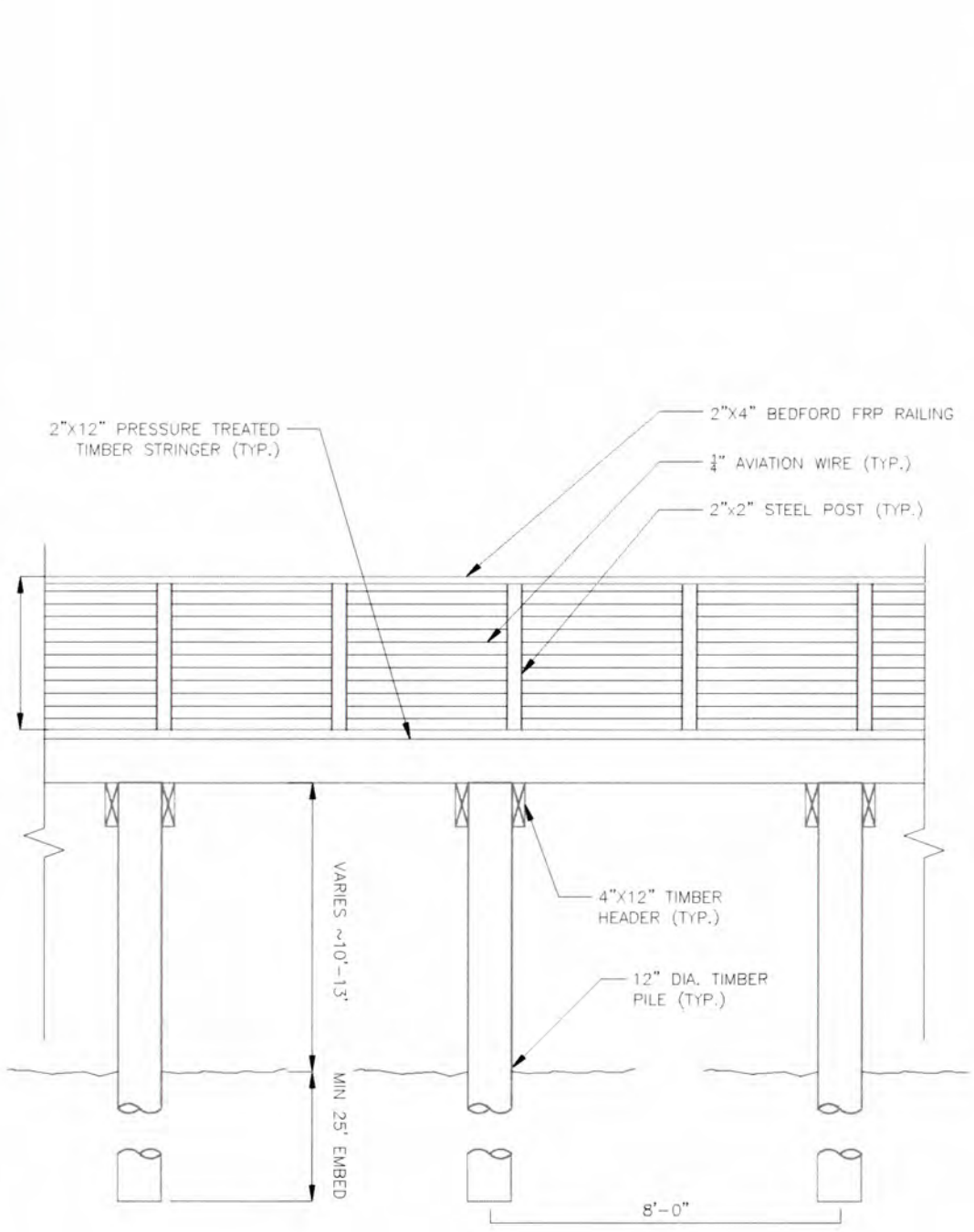

A MR-212 TYPICAL PIER ELEVATION

SCALE 1/4" = 1'

NOTE:
VERTICAL LENGTH OF PILES COMPRESSED AND NOT TO SCALE.

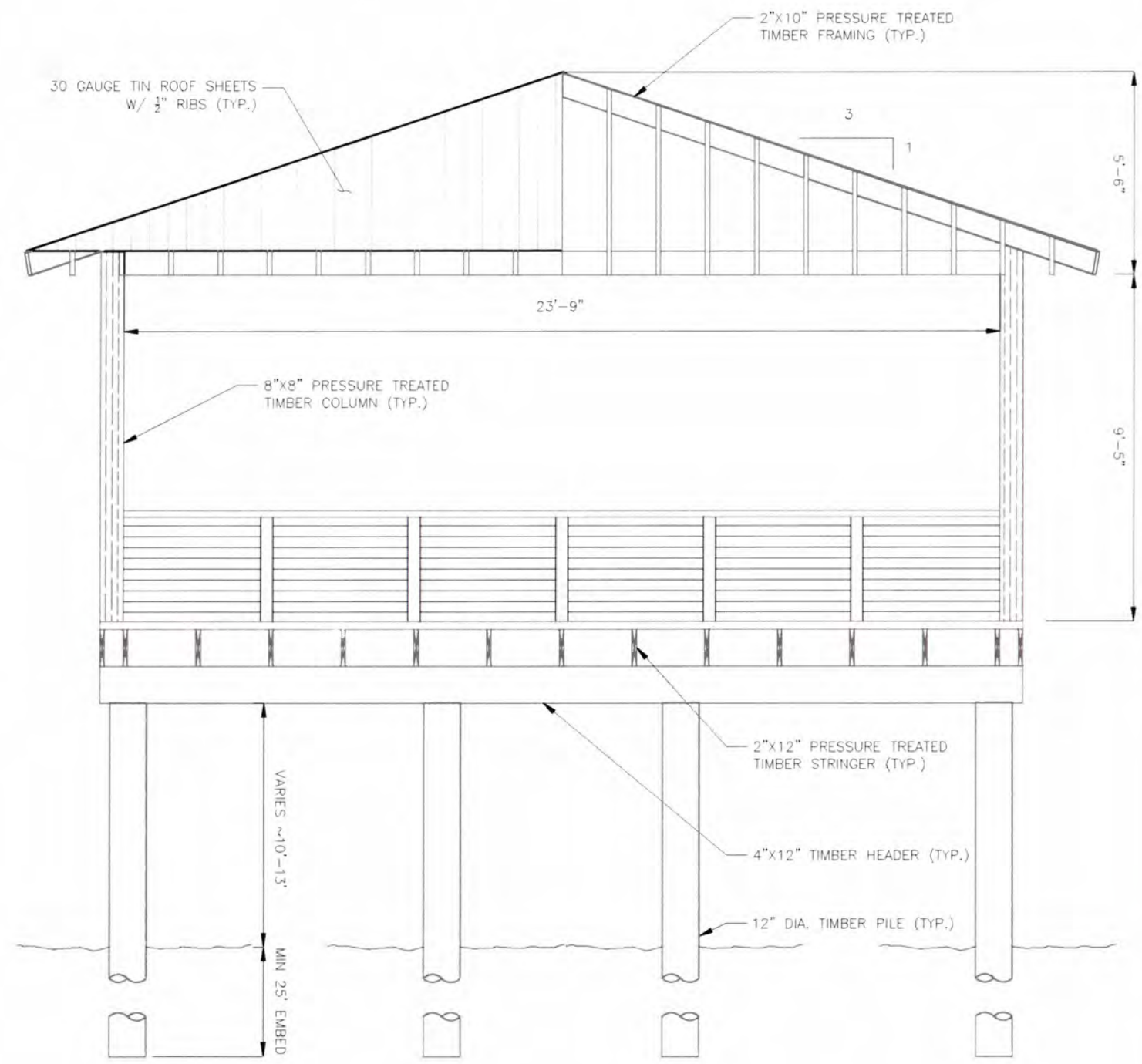

B MR-212 TYPICAL SECTION THROUGH GAZEBO

SCALE 1/4" = 1'

NOTE:
VERTICAL LENGTH OF PILES COMPRESSED AND NOT TO SCALE.

TMS WATERFRONT

EAGLE BAY
SHORELINE &
PUBLIC PIER

TOWN OF STONY POINT
ROCKLAND COUNTY, NEW YORK

No.	Date	Reason	By

PIER SECTIONS &
DETAILS II

Project No.	18003
Scale	1" = 4'
Date	JUNE 25, 2020
Drawn By	DAZ
Checked By	SET

Drawing No.

MR-212.00

11 of 13 Sheets

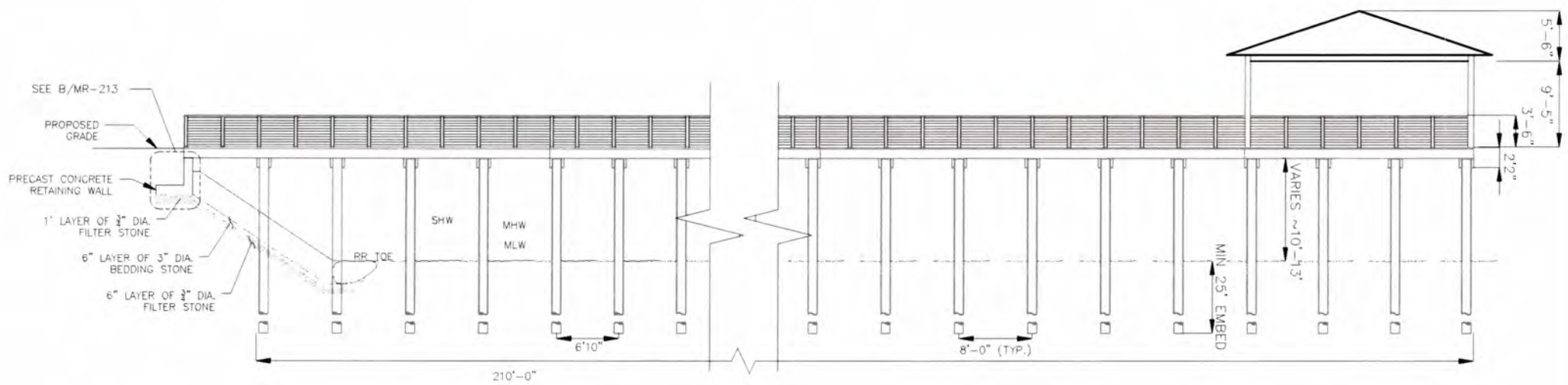

A MR-213 PIER ELEVATION

SCALE 1/16" = 1'

NOTE:
VERTICAL LENGTH OF PILES COMPRESSED AND NOT TO SCALE.

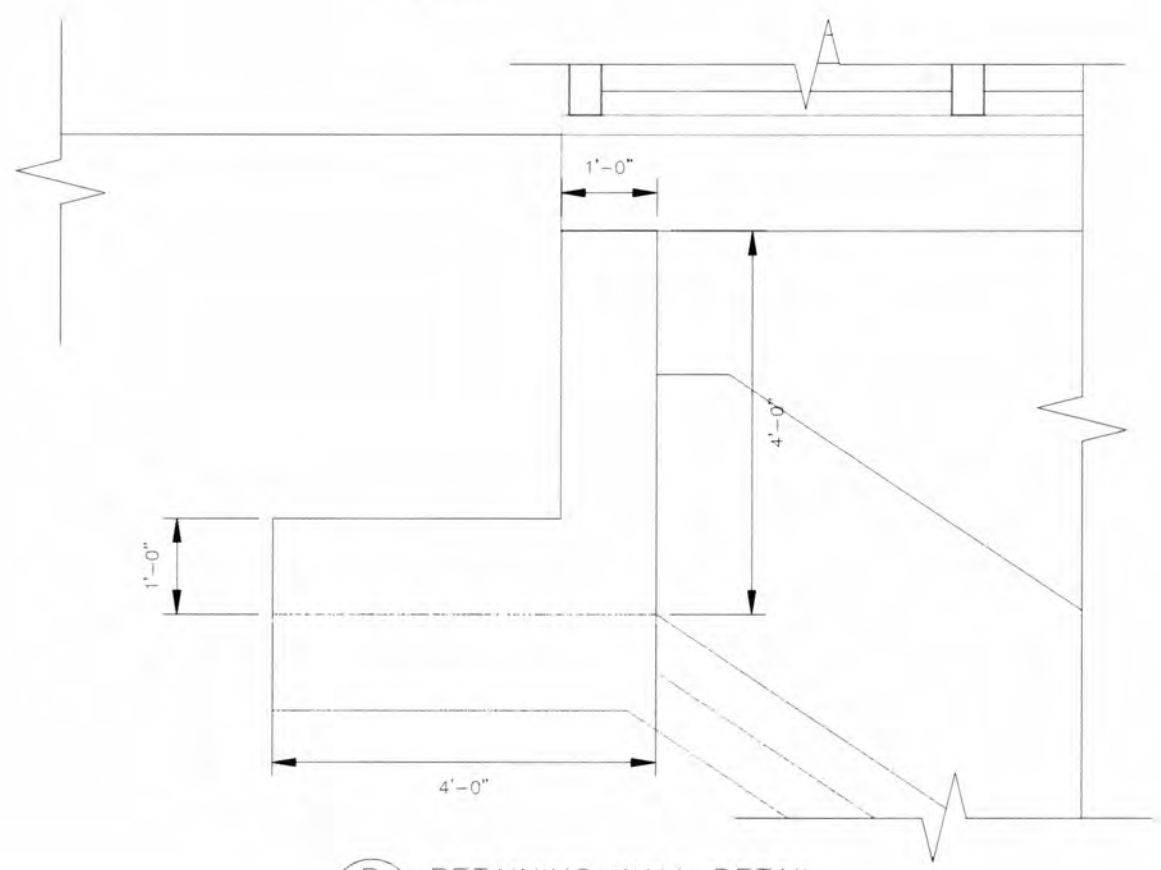

B MR-213 RETAINING WALL DETAIL

SCALE 1/2" = 1'

TMS WATERFRONT

EAGLE BAY SHORELINE & PUBLIC PIER

TOWN OF STONY POINT
ROCKLAND COUNTY, NEW YORK

No.	Date	Reason	By

PIER ELEVATIONS

Project No.	18003
Scale	AS NOTED
Date	JUNE 25, 2020
Drawn By	DAZ
Checked By	SET

MR-213.00

12 of 13

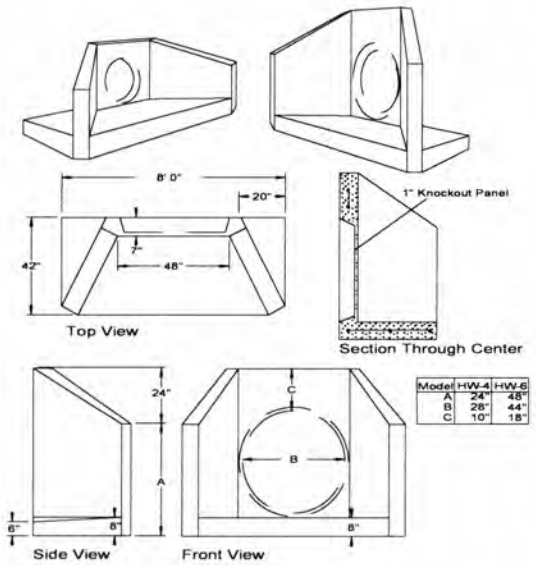

Model	HW-4	HW-6
A	24"	48"
B	28"	44"
C	10"	18"

SPECIFICATIONS

Concrete Min. Strength: 4,000 psi at 28 days
Reinforcement: #4 Rebar / ASTM A615
Air Entrainment: 6%
Pipe Connection: Mortar or grout
Pipe Range: up to 36" ID
Weight = 4,400 lbs or 6,600 lbs.
Load Rating: H20 / ASTM C857

N.T.S.

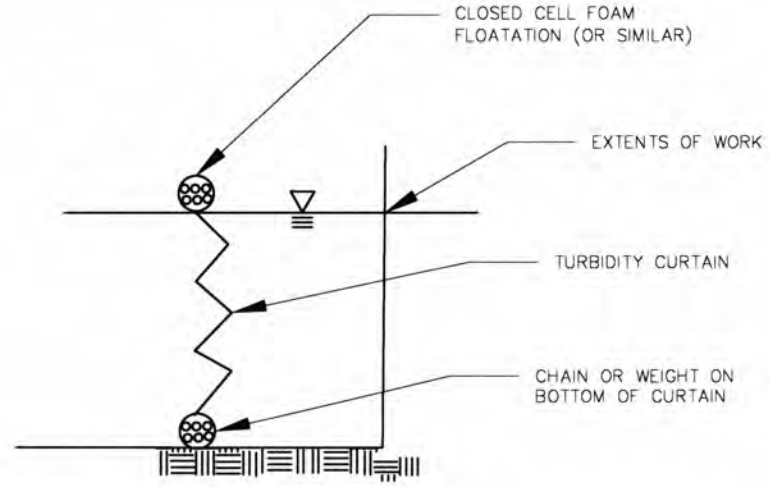

TURBIDITY CURTAIN DETAIL

CONSTRUCTION NOTES FOR PRE FABRICATED SILT FENCE

1. WOVEN WIRE FENCE TO BE FASTENED SECURELY TO FENCE POSTS WITH WIRE TIES OR STAPLES. POSTS SHALL BE STEEL EITHER "T" OR "U" TYPE OR HARDWOOD.
2. FILTER CLOTH TO BE TO BE FASTENED SECURELY TO WOVEN WIRE FENCE WITH TIES SPACED EVERY 24" AT TOP AND MID SECTION. FENCE SHALL BE WOVEN WIRE, 12 1/2 GAUGE, 6" MAXIMUM MESH OPENING.
3. WHEN TWO SECTIONS OF FILTER CLOTH ADJOIN EACH OTHER THEY SHALL BE OVER-LAPPED BY SIX INCHES AND FOLDED. FILTER CLOTH SHALL BE EITHER FILTER X, MIRAFI 100X, STABLINKA T140N, OR APPROVED EQUIVALENT.
4. PREFABRICATED UNITS SHALL BE GEOFAB, ENVIROFENCE, OR APPROVED EQUIVALENT.
5. MAINTENANCE SHALL BE PERFORMED AS NEEDED AND MATERIAL REMOVED WHEN "BULGES" DEVELOP IN THE SILT FENCE.

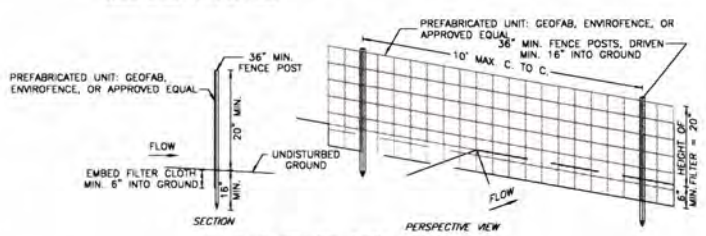

SILT FENCE DETAIL #2

N.T.S.

SEDIMENT & EROSION CONTROL NOTES

FABRIC FENCE WILL BE INSTALLED ALONG THE PROPOSED ROAD AND THE ADJACENT PROPERTY OWNERS AND ALL DISTURBED AREAS.

TEMPORARY SEEDING SHALL BE APPLIED TO DISTURBED AREAS THAT ARE LEFT BARE FOR 15 DAYS UNLESS CONSTRUCTION WILL BE BEGIN WITHIN 30 DAYS. IF CONSTRUCTION IS SUSPENDED OR COMPLETED, AREAS SHALL BE SEEDED OR MULCHED IMMEDIATELY.

STRUCTURAL MEASURES MUST BE MAINTAINED TO BE EFFECTIVE. IN GENERAL, THESE MEASURES MUST BE PERIODICALLY INSPECTED TO INSURE STRUCTURAL INTEGRITY, DETECT VANDALISM DAMAGE, AND FOR MAINTENANCE AND REPAIR WHENEVER NECESSARY.

A STABILIZED CONSTRUCTION ENTRANCE SHALL BE INSTALLED AT THE BEGINNING OF THE PROPOSED ROAD.

MACADAM SURFACES SHALL BE SWEPT "BROOM CLEAN" AT THE END OF EACH DAY DURING CONSTRUCTION.

CONSTRUCTION EQUIPMENT SHALL BE LIMITED TO AREAS WITHIN THE SILT FENCE SEDIMENT PROTECTION AREA.

TMS WATERFRONT

EAGLE BAY
SHORELINE &
PUBLIC PIER

TOWN OF STONY POINT
ROCKLAND COUNTY, NEW YORK

No.	Date	Reason	By

EXISTING
SECTIONS

18003
N.T.S.
JUNE 25, 2020
DAZ
SET

MR-301.00

13 13