Chautauqua County
DIVISION OF PLANNING AND COMMUNITY DEVELOPMENT
2 South Portage Street • Westfield, New York 14787
Phone (716) 753-4062 • www.planningchautauqua.com

July 23, 2020

NYS Department of State
Office of Planning & Development
Suite 1010
One Commerce Plaza, 99 Washington Ave
Albany, NY 12242-0001

RE: HANOVER KAYAK LAUNCH PERMIT APPLICATION

Dear NYS Department of State,

The Chautauqua County Division of Planning & Community Development is requesting permits to construct a floating kayak launch in the Town of Hanover, NY.

Please find attached the following documents;

- Joint Application Form (1)
- Project Plan (1)
- Site Map (1)
- Site Photos (1)
- SEQR Determination (1)
- DEC SAAF (1)
- DEC Supplement D-2 (1)
- DOS FCAF (1)

If you have any questions regarding our application, please call our office at (716) 753 4063.

Respectfully,

Brendan Cullen | Planning Technician
Chautauqua County Division of Planning & Community Development

Donald M. McCord, Director
McCordD@co.chautauqua.ny.us

Paul M. Wendel, Jr., County Executive
WendelP@co.chautauqua.ny.us

RECEIVED

AUG 06 2020

NYS Department of State
Planning and Development

NEW YORK STATE | Department of Environmental Conservation | Office of General Services | Department of State | US Army Corps of Engineers

JOINT APPLICATION FORM

For Permits for activities activities affecting streams, waterways, waterbodies, wetlands, coastal areas, sources of water, and endangered and threatened species.

You must separately apply for and obtain Permits from each involved agency before starting work. Please read all instructions.

1. **Applications To:**

>NYS Department of Environmental Conservation [✓] Check here to confirm you sent this form to NYSDEC.

Check all permits that apply:
- [ ] Stream Disturbance
- [ ] Excavation and Fill in Navigable Waters
- [✓] Docks, Moorings or Platforms
- [ ] Dams and Impoundment Structures
- [ ] 401 Water Quality Certification
- [ ] Freshwater Wetlands
- [ ] Tidal Wetlands
- [ ] Wild, Scenic and Recreational Rivers
- [ ] Coastal Erosion Management
- [ ] Water Withdrawal
- [ ] Long Island Well
- [ ] Incidental Take of Endangered / Threatened Species

>US Army Corps of Engineers [✓] Check here to confirm you sent this form to USACE.

Check all permits that apply: [ ] Section 404 Clean Water Act [✓] Section 10 Rivers and Harbors Act

Is the project Federally funded? [ ] Yes [✓] No

If yes, name of Federal Agency:

General Permit Type(s), if known:

Preconstruction Notification: [ ] Yes [ ] No

>NYS Office of General Services [✓] Check here to confirm you sent this form to NYSOGS.

Check all permits that apply:
- [✓] State Owned Lands Under Water
- [ ] Utility Easement (pipelines, conduits, cables, etc.)
- [✓] Docks, Moorings or Platforms

>NYS Department of State [✓] Check here to confirm you sent this form to NYSDOS.

Check if this applies: [✓] Coastal Consistency Concurrence

2. **Name of Applicant**: Chautauqua County Division of Planning & Com. Dev.

Taxpayer ID (if applicant is NOT an individual): 16-6002556

Mailing Address: 2 South Portage St.

Post Office / City: Westfield | State: NY | Zip: 14787

Telephone: 716 753 4063 Email: chautauquaplanning@co.chautauqua.ny.us

Applicant Must be (check all that apply): [ ] Owner [✓] Operator [ ] Lessee

3. **Name of Property Owner (if different than Applicant)**: Town of Hanover

Mailing Address: 68 Hanover Street

Post Office / City: Silver Creek | State: NY | Zip: 14136

Telephone: 716-934-2273 Email: hantc@roadrunner.com

For Agency Use Only	Agency Application Number:

4. Name of Contact / Agent

Brendan Cullen

Mailing Address: 2 South Portage St.

Post Office / City: Westfield

State: NY

Zip: 14787

Telephone: 716 753 4063

Email: cullenb@co.chautauqua.ny.us

5. Project / Facility Name

Kayak Along Chautauqua - Hanover Launch

Property Tax Map Section / Block / Lot Number: 33.05-3-20

Project Street Address, if applicable: 1083 Erie St.

Post Office / City: Irving

State: NY

Zip: 14081

Provide directions and distances to roads, intersections, bridges and bodies of water

Site is within the Town of Hanover Public Boat Launch. Site is located on Cattaraugus Creek, a tributary of Lake Erie. Site is 0.8 Miles upstream of Lake Erie. Site is located directly next to parking lot at 1083 Erie St, Irving, NY 14081

☑ Town ☐ Village ☐ City

County: Chautauqua

Stream/Waterbody Name: Cattaraugus Creek/Lake Erie

Hanover

Project Location Coordinates: Enter Latitude and Longitude in degrees, minutes, seconds:

Latitude: 42 33 ' 51.95 " Longitude: -79 7 ' 41.84 "

6. Project Description: Provide the following information about your project. Continue each response and provide any additional information on other pages. **Attach plans on separate pages.**

a. Purpose of the proposed project:

Waterfront access will be enhanced in five Chautauqua County communities by the development of ADA accessible kayak launches. The project locations are adjacent to key commercial areas for each community. The enhancement of these waterfront areas will have a positive impact on commercial nodes and play a significant role in downtown revitalization of each location. Funds for this project awarded through the NYDOS LWRP.

b. Description of current site conditions:

Site is within the Town of Hanover Boat Launch owned by the Town of Hanover. Project area is developed, consisting of a concrete boat launch, parking lot , and some mowed green space.

c. Proposed site changes:

Only changes to site include the installation of the kayak launch, and increased use of site for water recreation.

d. Type of structures and fill materials to be installed, and quantity of materials to be used (e.g., square feet of coverage, cubic yards of fill material, structures below ordinary/mean high water, etc.):

Type of Structure: Plastic Floating Dock & Concrete Slab.
Fill: Stone.
Qty: 16 cu ft of stone, 25 cu ft of concrete

e. Area of excavation or dredging, volume of material to be removed, location of dredged material placement:

Dredging: None
Excavation: Dirt & Gravel
Qty: Area 10' x 60' x 6"

f. Is tree cutting or clearing proposed? ☐ Yes If Yes, explain below. ☑ No

Timing of the proposed cutting or clearing (month/year): n/a

Number of trees to be cut: n/a Acreage of trees to be cleared: n/a

g. Work methods and type of equipment to be used:

Methods: Modular plastic dock components assembled on site, floated in water, anchored by galvanized pipe sleeved with PVC pipe. Gangways attached to abutments with Stainless or Galvanized hardware. Equipment: Aluminum work barge with hydraulic arm, aluminum work boat, battery operated hand tools, hydraulic pipe pounder.

h. Describe the planned sequence of activities:

These units are transported to the site, partially assembled on land, transferred to our work barge along with the gangways and driven to the installation site. The gangway shore side hinges are first affixed to the abutments, or sheet piling. Once the docks are assembled in the water, they are moved into position, elevated and anchored to land. Upon completion, PVC sleeves are installed over any accessories, and the site is cleaned up.

i. Pollution control methods and other actions proposed to mitigate environmental impacts:

All materials are non-polluting Polyethylene, Stainless & Galvanized Steel, or Aluminum. There is an absolute minimum of impact with the anchoring system that only encompasses less than 10 square inches total of seabed used for the galvanized steel pipes that hold the system in place. All materials are non-toxic and do not leech. The docks themselves are translucent and allow light to pass through them to not kill sea grass underneath.

j. Erosion and silt control methods that will be used to prevent water quality impacts:

There is one 6' x 10' concrete slab required at the Hanover site in order to comply with ADA requirements. The actual work is done at least 15' from the water. There is no other removal of soil or excavation needed as far as we know at this time. The Hanover installation will require galvanized steel pipes to be driven either into the seabed or the earth with a maximum of 10 square inches total being impacted at each site.

k. Alternatives considered to avoid regulated areas. If no feasible alternatives exist, explain how the project will minimize impacts:

To the best of our knowledge we are not installing any docks in any controlled or regulated areas where such installations would be prohibited.

l. Proposed use: ☐ Private ☑ Public ☐ Commercial

m. Proposed Start Date: 09/01/2020 Estimated Completion Date: 09/15/2020

n. Has work begun on project? ☐ Yes If Yes, explain below. ☑ No

o. Will project occupy Federal, State, or Municipal Land? ☑ Yes If Yes, explain below. ☐ No

Town of Hanover is a project partner on this project and has passed a resolution funding the project. Launch will be located on Town of Hanover land, and Cattaraugus Creek (a tributary to Lake Erie).

p. List any previous DEC, USACE, OGS or DOS Permit / Application numbers for activities at this location:

N/A

q. Will this project require additional Federal, State, or Local authorizations, including zoning changes?

☐ Yes If Yes, list below. ☑ No

7. **Signatures.**
Applicant and Owner (If different) must sign the application.
Append additional pages of this Signature section if there are multiple Applicants, Owners or Contact/Agents.

I hereby affirm that information provided on this form and all attachments submitted herewith is true to the best of my knowledge and belief.

Permission to Inspect - I hereby consent to Agency inspection of the project site and adjacent property areas. Agency staff may enter the property without notice between 7:00 am and 7:00 pm, Monday - Friday. Inspection may occur without the owner, applicant or agent present. If the property is posted with "keep out" signs or fenced with an unlocked gate, Agency staff may still enter the property. Agency staff may take measurements, analyze site physical characteristics, take soil and vegetation samples, sketch and photograph the site. I understand that failure to give this consent may result in denial of the permit(s) sought by this application.

False statements made herein are punishable as a Class A misdemeanor pursuant to Section 210.45 of the NYS Penal Law. Further, the applicant accepts full responsibility for all damage, direct or indirect, of whatever nature, and by whomever suffered, arising out of the project described herein and agrees to indemnify and save harmless the State from suits, actions, damages and costs of every name and description resulting from said project. In addition, Federal Law, 18 U.S.C., Section 1001 provides for a fine of not more than $10,000 or imprisonment for not more than 5 years, or both where an applicant knowingly and willingly falsifies, conceals, or covers up a material fact; or knowingly makes or uses a false, fictitious or fraudulent statement.

Signature of Applicant | Date: 7-27-20

Applicant Must be (check all that apply): [X] Owner [ ] Operator [ ] Lessee

Printed Name: Donald McCord | Title: Director

Signature of Owner (if different than Applicant) | Date: 7/27/20

Printed Name: Todd H. Johnson | Title: Town Supervisor

Signature of Contact / Agent | Date: 07/27/2020

Printed Name: Brendan Cullen | Title: Planning Technician

For Agency Use Only **DETERMINATION OF NO PERMIT REQUIRED**

Agency Application Number _____

_____ (Agency Name) has determined that No Permit is required from this Agency for the project described in this application.

Agency Representative:

Printed Name _____ Title _____

Signature _____ Date _____

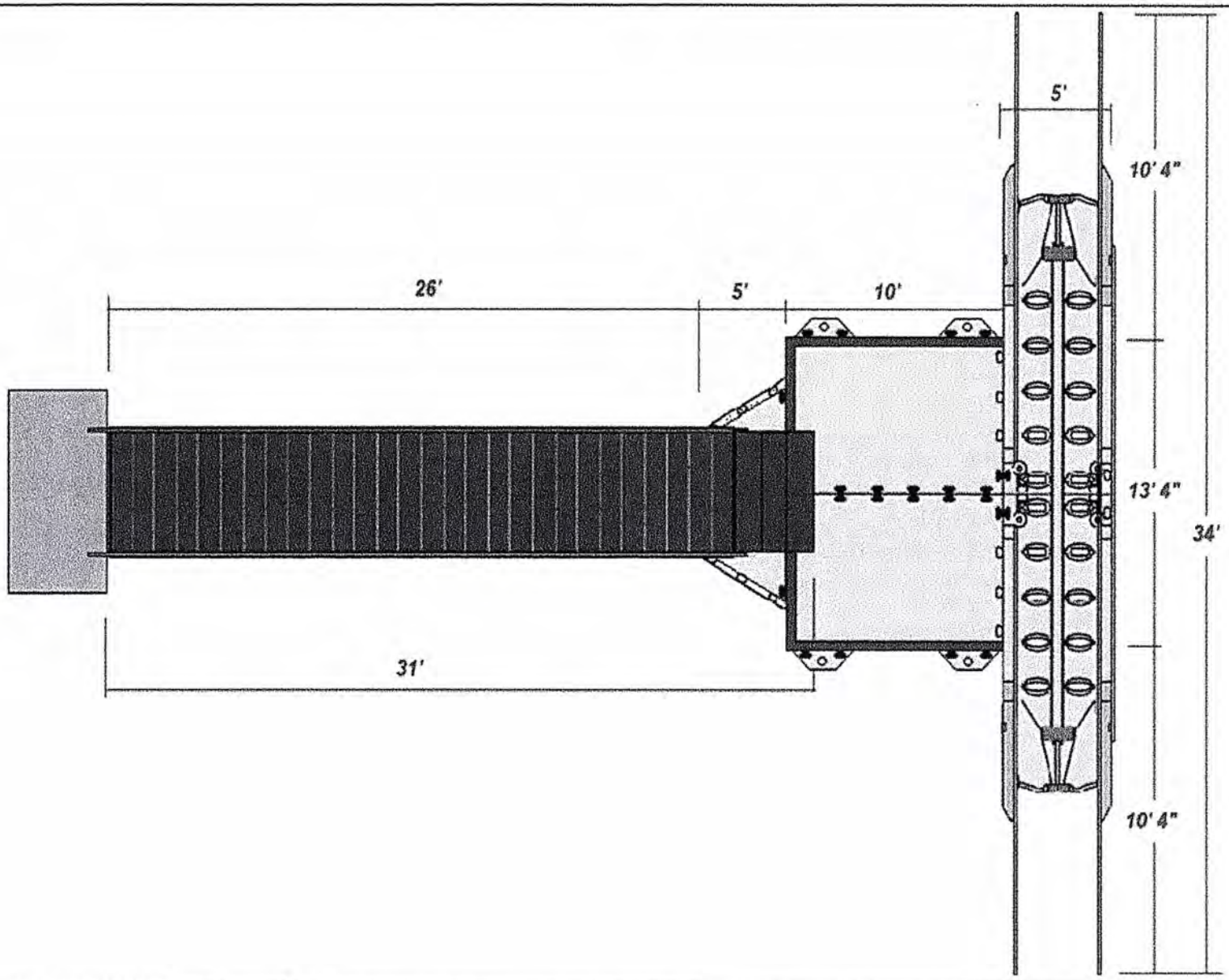

A division of Anchor Marine 1501 Ferry Rd. Grand Island, NY 14072 855-742-0138 GreaterLakesEZDock.com	Project: *EZ-Dock, EZ-Launch Kayak Launch Hanover*		Date: *6/26/2020*
	Prepared for: *Chautauqua County Planning Department*	Prepared by: *John Howlett*	Revision: Orig

Town of Hanover

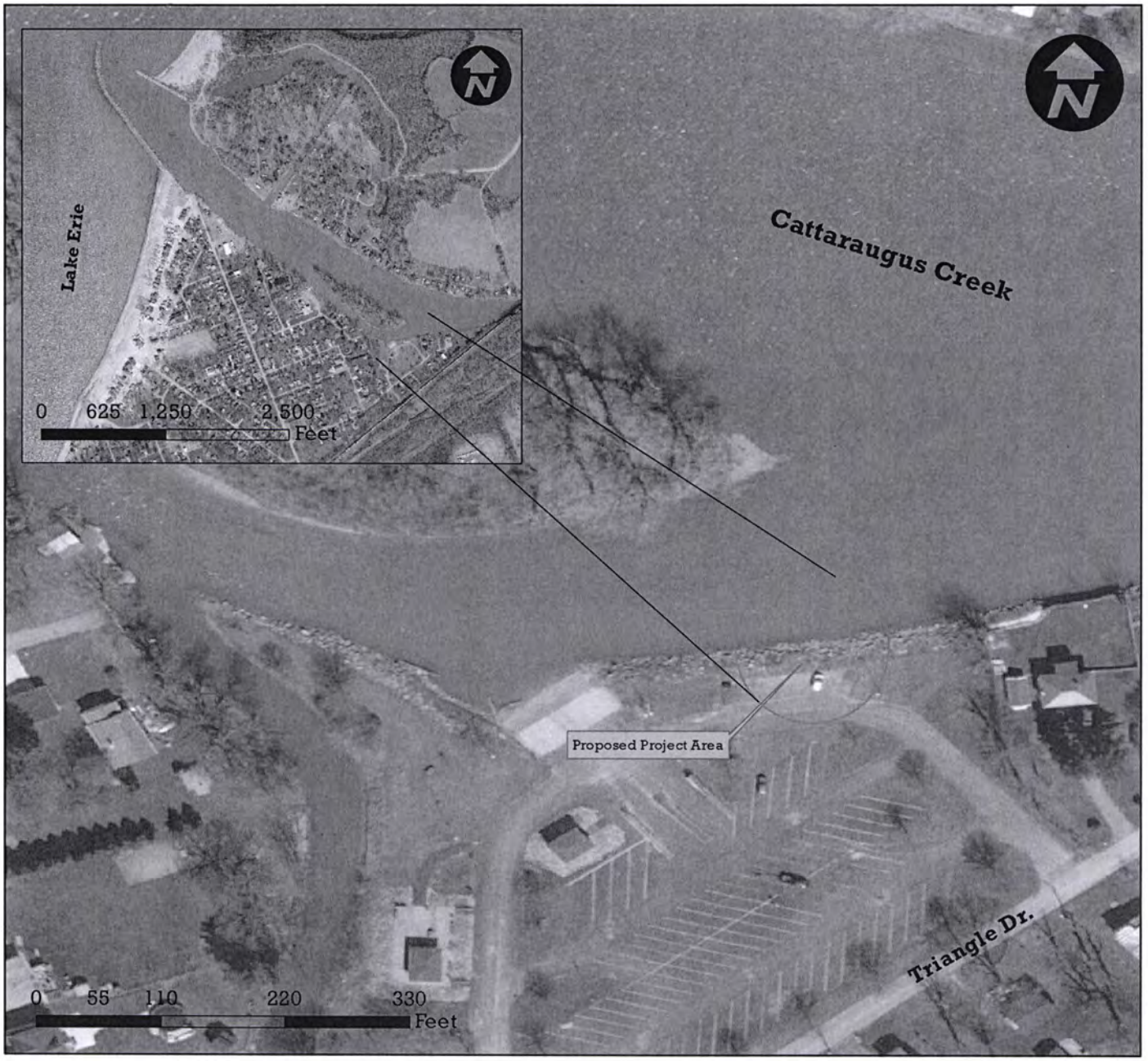

Site Notes

- Municipality: Town of Hanover

- Configuration: Floating Dock with Kayak Launch

- Must be ADA Accessible

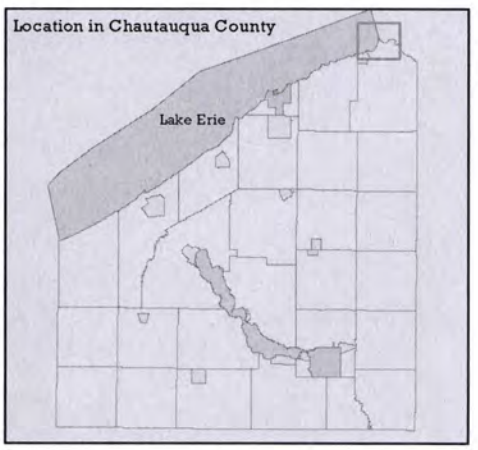

Views From East – July 20th, 2020 @ 2:45pm

View From South – July 20th, 2020 @ 2:45pm

View From SouthEast – July 20th, 2020 @ 2:45pm

Views From West – July 20th, 2020 @ 2:45pm

Short Environmental Assessment Form
Part 1 - Project Information

Instructions for Completing

Part 1 – Project Information. The applicant or project sponsor is responsible for the completion of Part 1. Responses become part of the application for approval or funding, are subject to public review, and may be subject to further verification. Complete Part 1 based on information currently available. If additional research or investigation would be needed to fully respond to any item, please answer as thoroughly as possible based on current information.

Complete all items in Part 1. You may also provide any additional information which you believe will be needed by or useful to the lead agency; attach additional pages as necessary to supplement any item.

Part 1 – Project and Sponsor Information

Name of Action or Project:

Kayak Along Chautauqua - Hanover Launch

Project Location (describe, and attach a location map):

Hanover Launch is located within Parcel ID: 33.05-3-20. Parcel is located within the Town of Hanover's Public Boat Launch facility

Brief Description of Proposed Action:

Waterfront access will be enhanced in five Chautauqua County communities by the development of ADA accessible kayak launches. The Hanover Launch is located on Cattaraugus Creek, a tributary of Lake Erie. The land is owned by the Town of Hanover, who is a partner agency on this project. The site is located within the Town of Hanover's Public Boat Launch facility, Irving, NY 14081.

The design is a 50 ft. by 34 ft. floating dock and launch system. The dock and launch system is primarily made of polyethylene and is equipped with guide rails for easy access in and out of the water, launch rollers for easy movement of watercraft, and floating platforms that adjust to changing water levels. The proposed design will be attached to this document.

Name of Applicant or Sponsor:	Telephone: 716-753-4063
Brendan Cullen | Chautauqua County Division of Planning & Community Development	E-Mail: CullenB@co.chautauqua.ny.us

Address:

2 South Portage St.

City/PO:	State:	Zip Code:
Westfield	New York	14787

	NO	YES
1. Does the proposed action only involve the legislative adoption of a plan, local law, ordinance, administrative rule, or regulation? If Yes, attach a narrative description of the intent of the proposed action and the environmental resources that may be affected in the municipality and proceed to Part 2. If no, continue to question 2.	☑	☐
2. Does the proposed action require a permit, approval or funding from any other government Agency? If Yes, list agency(s) name and permit or approval: DEC Docks, Moorings, or Platforms permit, New York DOS Funding	☐	☑

3. a. Total acreage of the site of the proposed action? 0.11 acres
   b. Total acreage to be physically disturbed? 0.04 acres
   c. Total acreage (project site and any contiguous properties) owned or controlled by the applicant or project sponsor? 3 acres

4. Check all land uses that occur on, are adjoining or near the proposed action:

5. ☑ Urban ☐ Rural (non-agriculture) ☐ Industrial ☐ Commercial ☑ Residential (suburban)
   ☐ Forest ☐ Agriculture ☑ Aquatic ☐ Other(Specify):
   ☐ Parkland

	NO	YES	N/A
5. Is the proposed action,			
a. A permitted use under the zoning regulations?	☐	✓	☐
b. Consistent with the adopted comprehensive plan?	☐	✓	☐

	NO	YES
6. Is the proposed action consistent with the predominant character of the existing built or natural landscape?	☐	✓

	NO	YES
7. Is the site of the proposed action located in, or does it adjoin, a state listed Critical Environmental Area? If Yes, identify:	✓	☐

	NO	YES
8. a. Will the proposed action result in a substantial increase in traffic above present levels?	✓	☐
b. Are public transportation services available at or near the site of the proposed action?	✓	☐
c. Are any pedestrian accommodations or bicycle routes available on or near the site of the proposed action?	☐	✓

	NO	YES
9. Does the proposed action meet or exceed the state energy code requirements? If the proposed action will exceed requirements, describe design features and technologies:	✓	☐

	NO	YES
10. Will the proposed action connect to an existing public/private water supply? If No, describe method for providing potable water: Potable water not applicable to this project.	✓	☐

	NO	YES
11. Will the proposed action connect to existing wastewater utilities? If No, describe method for providing wastewater treatment: Wastewater treatment is not applicable to this project.	✓	☐

	NO	YES
12. a. Does the project site contain, or is it substantially contiguous to, a building, archaeological site, or district which is listed on the National or State Register of Historic Places, or that has been determined by the Commissioner of the NYS Office of Parks, Recreation and Historic Preservation to be eligible for listing on the State Register of Historic Places?	✓	☐
b. Is the project site, or any portion of it, located in or adjacent to an area designated as sensitive for archaeological sites on the NY State Historic Preservation Office (SHPO) archaeological site inventory?	☐	✓

	NO	YES
13. a. Does any portion of the site of the proposed action, or lands adjoining the proposed action, contain wetlands or other waterbodies regulated by a federal, state or local agency?	☐	✓
b. Would the proposed action physically alter, or encroach into, any existing wetland or waterbody?	☐	✓
If Yes, identify the wetland or waterbody and extent of alterations in square feet or acres: Cattaraugus Creek - Approximately 0.04 acres altered to install the dock/launch.		

14. Identify the typical habitat types that occur on, or are likely to be found on the project site. Check all that apply:

☑ Shoreline ☐ Forest ☐ Agricultural/grasslands ☐ Early mid-successional

☐ Wetland ☐ Urban ☑ Suburban

	NO	YES
15. Does the site of the proposed action contain any species of animal, or associated habitats, listed by the State or Federal government as threatened or endangered? Bald Eagle, Eastern Sand Da...	☐	☑
16. Is the project site located in the 100-year flood plan?	☐	☑
17. Will the proposed action create storm water discharge, either from point or non-point sources? If Yes,	☑	☐
a. Will storm water discharges flow to adjacent properties?	☐	☐
b. Will storm water discharges be directed to established conveyance systems (runoff and storm drains)? If Yes, briefly describe:	☐	☐
18. Does the proposed action include construction or other activities that would result in the impoundment of water or other liquids (e.g., retention pond, waste lagoon, dam)? If Yes, explain the purpose and size of the impoundment:	☑	☐
19. Has the site of the proposed action or an adjoining property been the location of an active or closed solid waste management facility? If Yes, describe:	☑	☐
20. Has the site of the proposed action or an adjoining property been the subject of remediation (ongoing or completed) for hazardous waste? If Yes, describe:	☑	☐

I CERTIFY THAT THE INFORMATION PROVIDED ABOVE IS TRUE AND ACCURATE TO THE BEST OF MY KNOWLEDGE

Applicant/sponsor/name: Brendan Cullen | Chautauqua County Division of Plannign & Com. Dev. Date: 04/03/2020

Signature: Brendan Cullen Title: Planning Technician

PRINT FORM

EAF Mapper Summary Report

Tuesday, March 31, 2020 10:38 AM

Disclaimer: The EAF Mapper is a screening tool intended to assist project sponsors and reviewing agencies in preparing an environmental assessment form (EAF). Not all questions asked in the EAF are answered by the EAF Mapper. Additional information on any EAF question can be obtained by consulting the EAF Workbooks. Although the EAF Mapper provides the most up-to-date digital data available to DEC, you may also need to contact local or other data sources in order to obtain data not provided by the Mapper. Digital data is not a substitute for agency determinations.

Part 1 / Question 7 [Critical Environmental Area]	No
Part 1 / Question 12a [National or State Register of Historic Places or State Eligible Sites]	No
Part 1 / Question 12b [Archeological Sites]	Yes
Part 1 / Question 13a [Wetlands or Other Regulated Waterbodies]	Yes - Digital mapping information on local and federal wetlands and waterbodies is known to be incomplete. Refer to EAF Workbook.
Part 1 / Question 15 [Threatened or Endangered Animal]	Yes
Part 1 / Question 15 [Threatened or Endangered Animal - Name]	Bald Eagle, Eastern Sand Darter
Part 1 / Question 16 [100 Year Flood Plain]	Digital mapping data are not available or are incomplete. Refer to EAF Workbook.
Part 1 / Question 20 [Remediation Site]	No

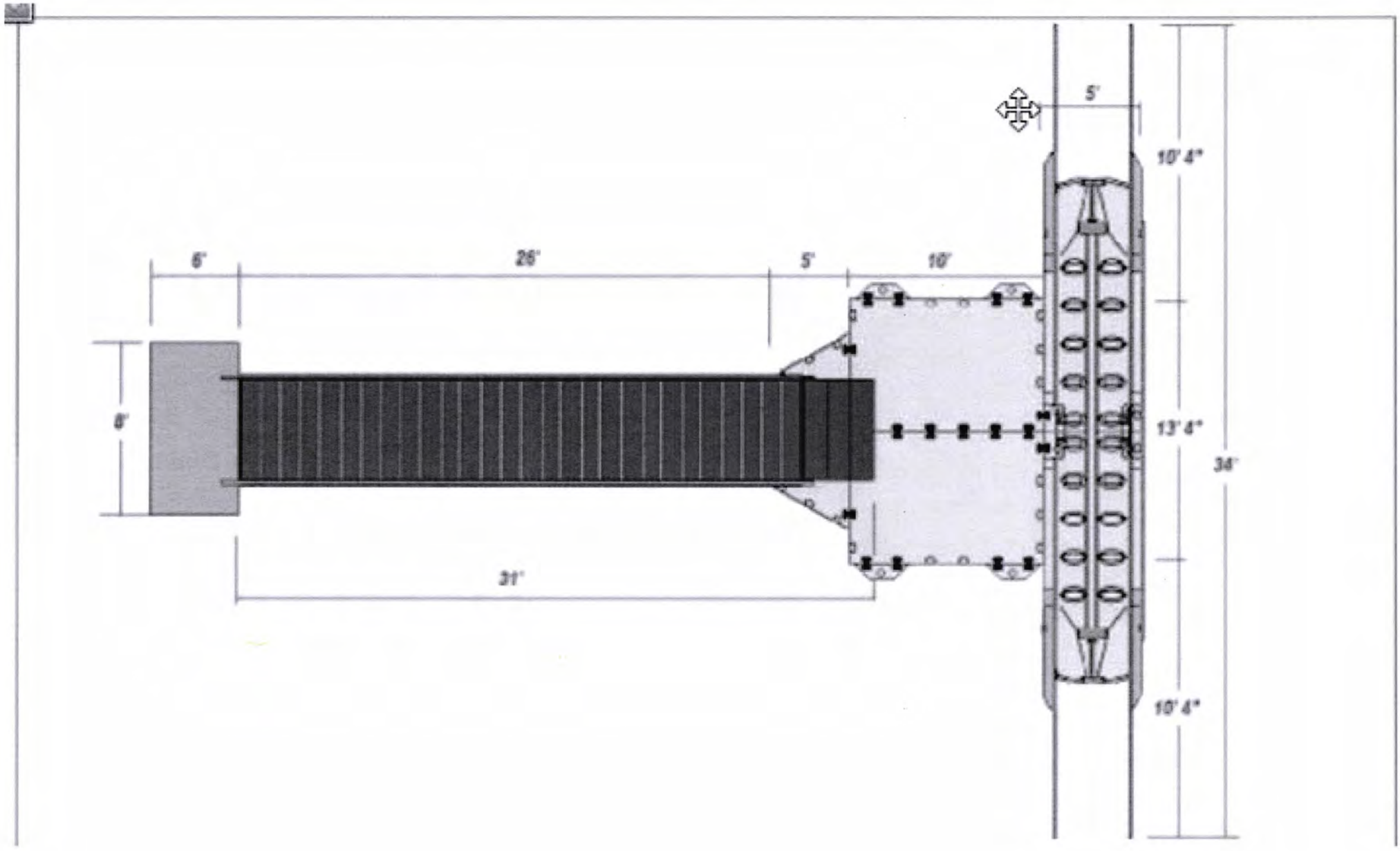
6'
26'
5'
10'
5'
10' 4"
8'
13' 4"
34'
31'
10' 4"

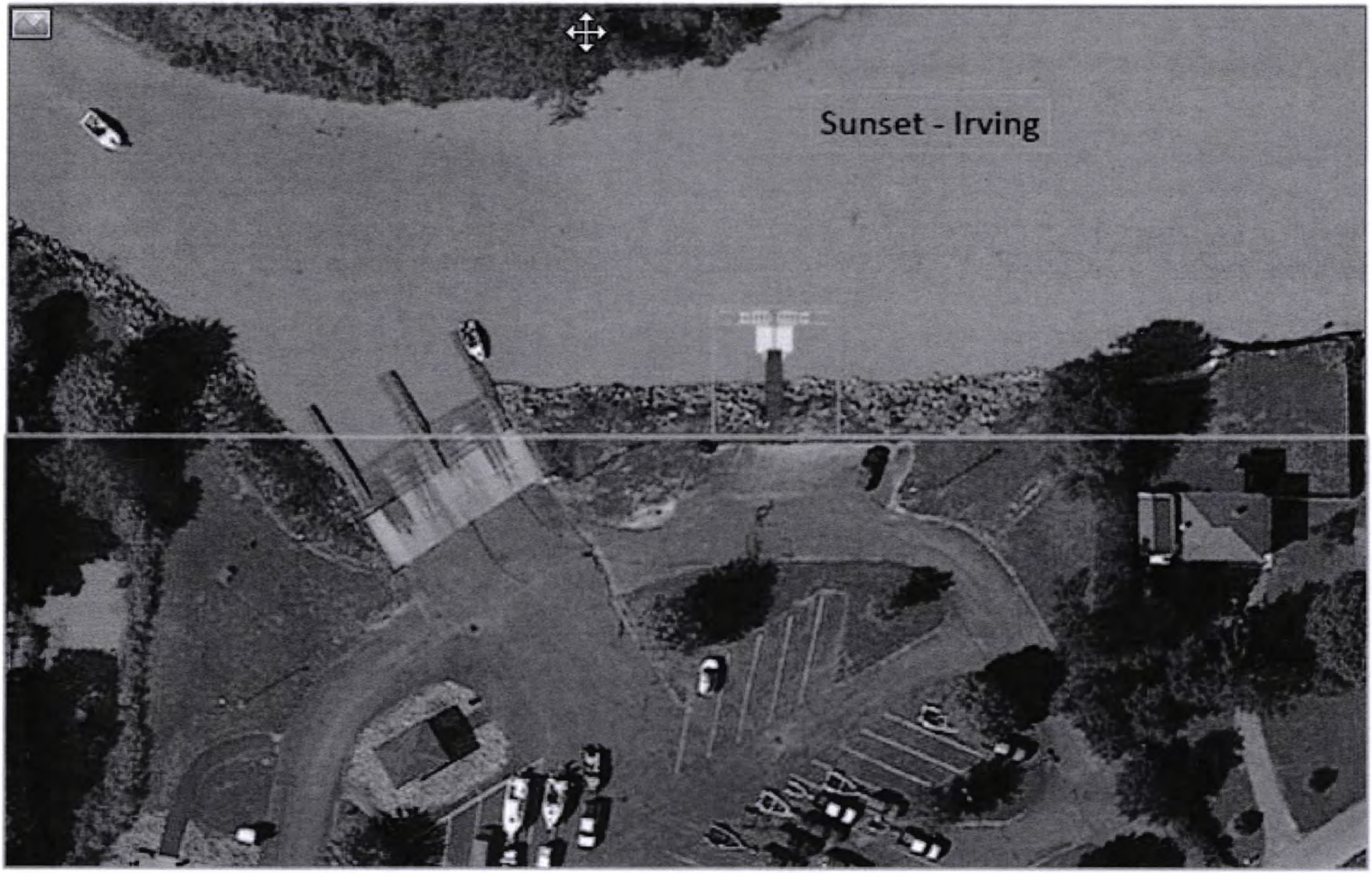
Sunset - Irving

Agency Use Only [If applicable]

Project: Kayak Along Chautauqua

Date: 04/03/2020

Short Environmental Assessment Form
Part 2 - Impact Assessment

Part 2 is to be completed by the Lead Agency.
Answer all of the following questions in Part 2 using the information contained in Part 1 and other materials submitted by the project sponsor or otherwise available to the reviewer. When answering the questions the reviewer should be guided by the concept "Have my responses been reasonable considering the scale and context of the proposed action?"

	No, or small impact may occur	Moderate to large impact may occur
1. Will the proposed action create a material conflict with an adopted land use plan or zoning regulations?	✓	
2. Will the proposed action result in a change in the use or intensity of use of land?	✓	
3. Will the proposed action impair the character or quality of the existing community?	✓	
4. Will the proposed action have an impact on the environmental characteristics that caused the establishment of a Critical Environmental Area (CEA)?	✓	
5. Will the proposed action result in an adverse change in the existing level of traffic or affect existing infrastructure for mass transit, biking or walkway?	✓	
6. Will the proposed action cause an increase in the use of energy and it fails to incorporate reasonably available energy conservation or renewable energy opportunities?	✓	
7. Will the proposed action impact existing: a. public / private water supplies?	✓	
b. public / private wastewater treatment utilities?	✓	
8. Will the proposed action impair the character or quality of important historic, archaeological, architectural or aesthetic resources?	✓	
9. Will the proposed action result in an adverse change to natural resources (e.g., wetlands, waterbodies, groundwater, air quality, flora and fauna)?	✓	
10. Will the proposed action result in an increase in the potential for erosion, flooding or drainage problems?	✓	
11. Will the proposed action create a hazard to environmental resources or human health?	✓	

PRINT FORM

Agency Use Only [If applicable]

Project: Kayak Along Chautauqu

Date: 04/03/2020

Short Environmental Assessment Form
Part 3 Determination of Significance

For every question in Part 2 that was answered "moderate to large impact may occur", or if there is a need to explain why a particular element of the proposed action may or will not result in a significant adverse environmental impact, please complete Part 3. Part 3 should, in sufficient detail, identify the impact, including any measures or design elements that have been included by the project sponsor to avoid or reduce impacts. Part 3 should also explain how the lead agency determined that the impact may or will not be significant. Each potential impact should be assessed considering its setting, probability of occurring, duration, irreversibility, geographic scope and magnitude. Also consider the potential for short-term, long-term and cumulative impacts.

Proposed action will not result in any significant adverse environmental impacts.

☐ Check this box if you have determined, based on the information and analysis above, and any supporting documentation, that the proposed action may result in one or more potentially large or significant adverse impacts and an environmental impact statement is required.

☑ Check this box if you have determined, based on the information and analysis above, and any supporting documentation, that the proposed action will not result in any significant adverse environmental impacts.

Chautauqua County Division of Planning & Community Dev.	04/03/2020
Name of Lead Agency	Date
Donald McCord	Director
Print or Type Name of Responsible Officer in Lead Agency	Title of Responsible Officer
Donald McCord	Brendan Cullen
Signature of Responsible Officer in Lead Agency	Signature of Preparer (if different from Responsible Officer)

PRINT FORM

NEW YORK STATE OF OPPORTUNITY. | Department of Environmental Conservation

STRUCTURAL ARCHAEOLOGICAL ASSESSMENT FORM (SAAF)
Supplement to the Joint Application Form

PART 1 – APPLICANT COMPLETES

APPLICANT INFORMATION

1. Applicant Name: Chautauqua County Division of Planning & Community Dev.

2. Applicant Address: 2 South Portage St., Westfield, NY 14787

PROJECT INFORMATION

3. Project/Facility Name: Kayaks Along Chautauqua - Hanover Launch

4. Project/Facility Location: Town of Hanover, NY - Public Boat Launch (Located off of Triangle Dr./Ann St.)

5. Is the proposed project adjacent to, or does it contain a building or structure listed in the State or National Register of Historic Places? ☐ Yes ☒ No

6. Are there any buildings or structures 50 years old or older adjacent to or within the proposed project area? ☐ Yes ☒ No

If the answer to question 5 and /or 6 is yes, provide the following information for each building and structure (use attachments if necessary):

a. Name of structure:

b. Location:

c. Type of structure (ex. house, outbuilding, barn, bridge, dam, ruins):

d. Approximate age or date of construction:

7. Might the proposed project have any impact (physical/visual) upon any buildings or structures listed in the State or National Register of Historic Places or 50 years old or older? ☐ Yes ☒ No

If yes, describe briefly (use attachments if necessary):

APPLICANT SECTION CONTINUES ON REVERSE SIDE

8. Provide photographs of every building and structure that may be impacted by the project as described in number 7, on the opposite side of this page. The following standards are recommended:

- Minimum of 2 photographs
- Photographs must be 3.5" x 5" in size or larger
- Photos must be clear and focused
- Digital photographs must be printed on photo paper and be produced at a printer setting of a minimum of 600 dpi
- Clearly label photos so it is obvious what is being illustrated; key photos to map or plan, if possible
- Photo 1: show both the entire front and side of the structure in a single shot from as close to the building as possible. Be sure the structure is not partially or fully blocked by trees or other obstructions
- Photo 2: show relationship of building or structure to roadway or surroundings

9. Has the land within the proposed project area been previously disturbed or altered (excavated, landscaped, filled, utilities installed)? ☒ Yes ☐ No

If yes, describe briefly, including depth of disturbance (use attachments if necessary):

Area has been altered to build up the creek wall with rip-rap (large stones, wire, etc.). Parts of project area has also been converted to pavement parking lot.

10. Approximate percentage of proposed project area with slopes:

- 0-10% 80 %
- 10-15% 20 %
- 15% or greater ____%

11. Approximate percentage of proposed project site with the following drainage characteristics:

- Well drained 20 %
- Moderately well drained 80 %
- Poorly drained ____%

Prepared By (Print or type name): Brendan Cullen | Planning Technician

Signature: *Brendan Cullen* Date: 07/20/20

RESET PART 1

PART 2 – DEPARTMENT OF ENVIRONMENTAL CONSERVATION (DEC) COMPLETES

APPLICANT/PROJECT INFORMATION

1.Applicant Name:

2. Project/Facility Name:

3. DEC Number:

BUILDINGS AND STRUCTURES

4. Might the proposed project have any impact (physical/visual) upon any buildings or structures listed in the State or National Register of Historic Places or 50 years old or older? ☐ Yes ☐ No

If yes, DEC must consult with the Office of Parks, Recreation and Historic Preservation (OPRHP). DEC must request a determination of eligibility for the State Register of Historic Places and/or comments regarding project impact. Include information supplied by the applicant in response to questions 5, 6, 7 and 8 of **Part 1** of this form.

ARCHAEOLOGICAL SITES

5. Does the proposed project area coincide with a circle, square or stippled area on OPRHP's Statewide Archaeological Inventory Map? ☐ Yes ☐ No

6. Is the proposed project area outside of a circle or square, but one for which information has been provided (ex: documented reports of known sites) that suggests the area is archaeologically sensitive? ☐ Yes ☐ No

If yes, what is the nature and source of information?

7. Is the proposed project area apparently undisturbed? ☐ Yes ☐ No

8. Will the proposed action include a physical disturbance of the project area? ☐ Yes ☐ No

9. Is the slope in the area characteristically less than 15% (unless on limestone/flint escarpments)? ☐ Yes ☐ No

DEC SECTION CONTINUES ON REVERSE SIDE

10. Is the proposed project area characteristically moderately well or well drained? ☐ Yes ☐ No

If the answers to 5, 7-10 are yes, an archeological survey should be performed by the applicant. Provide the applicant with a copy of or the link to the *State Historic Preservation Office Phase 1 Archaeological Report Format Requirements (08/05)*.

If the answer to 5 is no, but answers to 6-10 are yes, DEC must consult with OPRHP before requiring that the applicant perform an archaeological survey.

RESULTS OF EVALUATION

☐	SHPA-1	No buildings, structures or archaeological sites identified at the project location.	
☐	SHPA-2	Buildings, structures or archaeological sites identified, but no impacts will occur, no survey required. No further cultural resources review required.	
☐		Consultation by DEC with OPRHP required.	☐ Structures ☐ Archaeology
☐		Archaeological survey required.	

Prepared by: Date:

RESET PART 2

NEW YORK STATE OF OPPORTUNITY. | Department of Environmental Conservation

APPLICATION FOR PERMIT
FOR THE CONSTRUCTION, RECONSTRUCTION OR EXPANSION OF DOCKING AND MOORING FACILITIES
(Including Platforms and Breakwaters)

Supplement D-2

FOR AGENCY USE ONLY
DEC APPLICATION NUMBER:
U.S. ARMY CORPS OF ENGINEERS APPLICATION NUMBER:

Please read all instructions on the following page.
TYPE OR PRINT CLEARLY IN INK.
Attach additional information as needed.

PROJECT CONSTRUCTION DESCRIPTION:
Installation of ADA accessible floating kayak launch

1. TYPE OF ACTIVITY:

☑ New Facility Construction ☐ Substantial Reconstruction ☐ Expansion ☐ Change in Use

2. CAPACITY OF DOCKING FACILITY OR MOORING AREA:

Maximum number of boats to be docked: 1
Maximum number of boats to be moored: 0
Boat type and size ranges to be served: Kayaks & Canoes
Total surface area of facility perimeter: 458 square feet

3. IDENTIFY STRUCTURE TYPES AND THE USE OF SUCH STRUCTURES, INCLUDE SIZE, TYPE OF CONSTRUCTION AND MATERIALS TO BE USED, IF SUBSTANTIAL RECONSTRUCTION IS REQUIRED, EXPLAIN EXTENT OF ACTIVITY INCLUDING PERCENTAGE OF THE TOTAL STRUCTURE SIZE AFFECTED.

Type of Structure: Polyethylene Floating dock (303sqft), Aluminum Gangway & Transition Plate (155sqft), Concrete Slab (25 cubic ft.) with Stone fill (16 cubic ft.)

Construction Methods: Modular plastic dock components assembled on site, floated in water, anchored by galvanized pipe sleeved with PVC pipe. Gangways attached to abutments with Stainless or Galvanized hardware. Excavation of approximately10' x 60' x 6" of dirt and gravel for concrete slab to anchor to.

Construction Equipment: Aluminum work barge with hydraulic arm, aluminum work boat, battery operated hand tools, hydraulic pipe pounder.

(continue on attached sheet if necessary)

4. FOR NEW FACILITY, EXPANSION OF EXISTING FACILITY OR CHANGE IN USE, CHECK APPROPRIATE ITEMS AND DESCRIBE THE SERVICES TO BE PROVIDED:

☐ Water Supply:
☐ Sewage Disposal:
☐ Electrical Supply:
☐ Gas Supply:
☐ Gasoline/Oil Supply:
☐ Other:

(continue on attached sheet if necessary)

5. SIGNATURE: Brendan Cullen DATE: 07/20/2020

(rev. 3/16)

Reset

APPLICABILITY

1. The construction, reconstruction or expansion of docking or mooring facilities on, in or above state-owned lands under water requires authorization from the New York State Office of General Services. For application requirements contact: New York State Office of General Services, Division of Real Property Planning, Bureau of Land Management, Empire State Plaza, Corning Tower, 26th Floor, Albany, NY 12242. A permit pursuant to Article 15, Title 5 of the Environmental Conservation Law may not be required from the Department of Environmental Conservation in these circumstances.

2. The determination that no permit is required from the New York State Department of Environmental Conservation does not necessarily mean that no permit is required from the Unites States Army Corps of Engineers. All parties considering constructing projects within the navigable waters of the State should consult directly with the United States Army Corps of Engineers to accurately determine what requirements apply.

INSTRUCTIONS

1. Application shall include four (4) copies of this form, a map showing the facility location, scaled plans, cross-sections and specifications depicting all major structures and the delineated facility perimeters that include a reference point tied to a permanent structure or significant natural features.

2. This application must be accompanied by a New York State Department of Environmental Conservation JOINT APPLICATION FOR PERMIT (95-19-3).

3. Applications shall be submitted to the Regional Permit Administrator at the appropriate office of the Department, as indicated on the JOINT APPLICATION FOR PERMIT.

4. Construction, reconstruction or installation of docking and mooring structures shall NOT be started until a permit authorizing such activity has been issued by the New York State Department of Environmental Conservation.

5. The following definitions as listed in 6 NYCRR Part 608.1 apply.

   Docking Facility means any marine, boat basin, marine terminal, and any other areas on navigable waters containing a single structure or a collection of related structures, such as docks, piers, platforms, bulkheads, breakwaters, and pilings, used for the reception, securing, and protection of boats, ships, barges or other water craft.

   Mooring means a float, buoy, chain, cable, rope, pile, spar, dolphin or any other device or combination of devices that are anchored or fixed in navigable waters of the state to which a vessel can be made fast.

   Mooring Area means a collection of individual moorings located within a definable area of navigable waters of the state and under single private ownership or control.

   Perimeter means a boundary of a docking facility or mooring area consisting of a series of connected imaginary lines on a plan or map, encompassing all related structures such as docks, bulkheads, breakwaters, pilings, piers, platforms or moorings and the travel lanes and berthing areas that function together to create a facility or area at which vessels may be docked or moored.

   Platform means a generally horizontal, flat surface located in, on or over a waterbody, on which structures can be constructed or any activities can be conducted.

   Substantial reconstruction of structures means restoration or rebuilding, involving fifty percent (50%) or more of an existing fixed structure's surface area.

NEW YORK STATE DEPARTMENT OF STATE
COASTAL MANAGEMENT PROGRAM

Federal Consistency Assessment Form

An applicant, seeking a permit, license, waiver, certification or similar type of approval from a federal agency which is subject to the New York State Coastal Management Program (CMP), shall complete this assessment form for any proposed activity that will occur within and/or directly affect the State's Coastal Area. This form is intended to assist an applicant in certifying that the proposed activity is consistent with New York State's CMP as required by U.S. Department of Commerce regulations (15 CFR 930.57). It should be completed at the time when the federal application is prepared. The Department of State will use the completed form and accompanying information in its review of the applicant's certification of consistency.

A. **APPLICANT** (please print)

1. Name: Chautauqua County Division of Planning & Community Development
2. Address: 2 South Portage St., Westfield, NY 14787
3. Telephone: Area Code ( ) 716-753-4063

B. **PROPOSED ACTIVITY:**

1. Brief description of activity:

Waterfront access will be enhanced in five Chautauqua County communities by the development of ADA accessible kayak launches. Funds for this project awarded through the NYDOS LWRP.

2. Purpose of activity:

The enhancement of these waterfront areas will have a positive impact on commercial nodes and play a significant role in downtown revitalization.

3. Location of activity:

Chautauqua	Town of Hanover	1083 Erie St. Irving, NY
County	City, Town, or Village	Street or Site Description

4. Type of federal permit/license required: Section 10 Rivers & Harbors Act

5. Federal application number, if known: _____

6. If a state permit/license was issued or is required for the proposed activity, identify the state agency and provide the application or permit number, if known:

DEC and NYOGS Docks, Moorings, or Platforms, NYDOS Coastal Consistency

RECEIVED
AUG 06 2020
NYS Department of State
Planning and Development

C. **COASTAL ASSESSMENT** Check either "YES" or "NO" for each of these questions. The numbers following each question refer to the policies described in the CMP document (see footnote on page 2) which may be affected by the proposed activity.

1. Will the proposed activity result in any of the following:	YES	NO
a. Large physical change to a site within the coastal area which will require the preparation of an environmental impact statement? (11, 22, 25, 32, 37, 38, 41, 43)		✓
b. Physical alteration of more than two acres of land along the shoreline, land under water or coastal waters? (2, 11, 12, 20, 28, 35, 44)		✓
c. Revitalization/redevelopment of a deteriorated or underutilized waterfront site? (1)	✓	
d. Reduction of existing or potential public access to or along coastal waters? (19, 20)		✓
e. Adverse effect upon the commercial or recreational use of coastal fish resources? (9,10)		✓
f. Siting of a facility essential to the exploration, development and production of energy resources in coastal waters or on the Outer Continental Shelf? (29)		✓
g. Siting of a facility essential to the generation or transmission of energy? (27)		✓
h. Mining, excavation, or dredging activities, or the placement of dredged or fill material in coastal waters? (15, 35)		✓
i. Discharge of toxics, hazardous substances or other pollutants into coastal waters? (8, 15, 35)		✓
j. Draining of stormwater runoff or sewer overflows into coastal waters? (33)		✓
k. Transport, storage, treatment, or disposal of solid wastes or hazardous materials? (36, 39)		✓
l. Adverse effect upon land or water uses within the State's small harbors? (4)		✓

2. Will the proposed activity affect or be located in, on, or adjacent to any of the following:	YES	NO
a. State designated freshwater or tidal wetland? (44)		✓
b. Federally designated flood and/or state designated erosion hazard area? (11, 12, 17)	✓	
c. State designated significant fish and/or wildlife habitat? (7)	✓	
d. State designated significant scenic resource or area? (24)		✓
e. State designated important agricultural lands? (26)		✓
f. Beach, dune or Barrier Island? (12)		✓
g. Major ports of Albany, Buffalo, Ogdensburg, Oswego or New York? (3)		✓
h. State, county, or local park? (19, 20)	✓	
i. Historic resource listed on the National or State Register of Historic Places? (23)		✓

3. Will the proposed activity require any of the following:	YES	NO
a. Waterfront site? (2, 21, 22)	✓	
b. Provision of new public services or infrastructure in undeveloped or sparsely populated sections of the coastal area? (5)		✓
c. Construction or reconstruction of a flood or erosion control structure? (13, 14, 16)		✓
d. State water quality permit or certification? (30, 38, 40)		✓
e. State air quality permit or certification? (41, 43)		✓

4. Will the proposed activity occur within and/or affect an area covered by a State-approved local waterfront revitalization program, or State-approved regional coastal management program? (see policies in program document*)	✓	

D. **ADDITIONAL STEPS**

1. If all of the questions in Section C are answered "NO", then the applicant or agency shall complete Section E and submit the documentation required by Section F.

2. If any of the questions in Section C are answered "YES", then the applicant or agent is advised to consult the CMP, or where appropriate, the local waterfront revitalization program document*. The proposed activity must be analyzed in more detail with respect to the applicable state or local coastal policies. On a separate page(s), the applicant or agent shall: (a) identify, by their policy numbers, which coastal policies are affected by the activity, (b) briefly assess the effects of the activity upon the policy; and, (c) state how the activity is consistent with each policy. Following the completion of this written assessment, the applicant or agency shall complete Section E and submit the documentation required by Section F.

E. **CERTIFICATION**

The applicant or agent must certify that the proposed activity is consistent with the State's CMP or the approved local waterfront revitalization program, as appropriate. If this certification cannot be made, the proposed activity shall not be undertaken. If this certification can be made, complete this Section.

"The proposed activity complies with New York State's approved Coastal Management Program, or with the applicable approved local waterfront revitalization program, and will be conducted in a manner consistent with such program."

Applicant/Agent's Name: Brendan Cullen

Address: 2 South Portage St., Westfield, NY 14787

Telephone: Area Code ( ) 716-753-4063

Applicant/Agent's Signature: Brendan Cullen Date: 07/23/2020

F. **SUBMISSION REQUIREMENTS**

1. The applicant or agent shall submit the following documents to the **New York State Department of State, Office of Planning and Development, Attn: Consistency Review Unit, One Commerce Plaza-Suite 1010, 99 Washington Avenue, Albany, New York 12231.**

a. Copy of original signed form.
b. Copy of the completed federal agency application.
c. Other available information which would support the certification of consistency.

2. The applicant or agent shall also submit a copy of this completed form along with his/her application to the federal agency.

3. If there are any questions regarding the submission of this form, contact the Department of State at (518) 474-6000.

*These state and local documents are available for inspection at the offices of many federal agencies, Department of environmental Conservation and Department of State regional offices, and the appropriate regional and county planning agencies. Local program documents are also available for inspection at the offices of the appropriate local government.

D. ADDITIONAL STEPS

(a) Identify, by their policy numbers, which coastal policies are affected by the activity.

1.c. Revitalization/redevelopment of a deteriorated or underutilized waterfront site? (1)

2.b. Federally designated flood and/or state designated erosion hazard area? (11, 12, 17)

2.c State designated significant fish and/or wildlife habitat? (7)

2.h. State, county, or local park? (19, 20)

3.a Waterfront site? (2, 21, 22)

(b) Briefly assess the effect of the activity upon the policy.

Currently, the site is a public boat launch and parking lot. The project will further develop this waterfront site through the installation of an ADA accessible kayak launch. Upon completion, the project area will receive increased waterfront recreation activity. The site will continue to be maintained as a public boat launch and parking lot. The site is within a federally designated 100-year flood zone, however, the launch is designed to be removable. The installation and use of this site will have no significant impact on the environment.

(c) State how the activity is consistent with each policy.

This project is funded by the NYDOS Local Waterfront Revitalization Program CFA #79986.

Policy 1:

The project will redevelop this underutilized waterfront site through the installation of an ADA accessible kayak launch. This activity is consistent with Policy 1.

Policy 2:

The project will facilitate the siting of a water dependent use on coastal water. A kayak launch is a water dependent use and is consistent with Policy 2.

Policy 7:

The SEQR process determined there will be no significant impact on the environment. The project is for a floating launch that will require minor changes to an already developed area. This activity is consistent with Policy 7.

Policy 11:

The launch is small and designed to be removable. The ability to remove the launch will minimize damage to property or the endangerment of human lives caused by flooding. The site is currently a developed boat launch and parking lot and is consistent with Policy 11.

Policy 12:

The site will continue to be maintained as a public boat launch and minimal natural resources will be removed during the installation. This activity is consistent with Policy 12.

Policy 17:

The SEQR process determined this location will have no significant impact on the environment. This activity is consistent with Policy 17.

Policy 19:

The project will encourage and facilitate increased levels and types of access to public water related recreation through the installation of this ADA accessible kayak launch. This activity is consistent with Policy 19.

Policy 20:

There is road access to the boat launch. The site will continue to be publically owned, and is compatible with the current use. This activity is consistent with Policy 20.

Policy 21:

A kayak launch will encourage and facilitate water recreation and will be the primary use of this site. This activity is consistent with Policy 21.

Policy 22:

This primary purpose of the development is water-related, and the site is within a public boat launch. The activity is consistent with Policy 22.